GIBSON AMPLIFIER MASTER
SERVICE BOOK

TABLE OF CONTENTS

SERVICE MATERIALS & SCHEMATICS

AMPLIFIER NAME OR MODEL

ATLAS MEDALIST.....296
ATLAS IV.....292
BA-15RV.....121
BASS 30.....321
BASS 50.....321
BR-1.....34
BR-3.....37
BR-4.....38
BR-6.....42
BR-6F.....43
BR-9.....44
CLAVIOLENE.....47
DUO-MEDALIST.....313
DUO-MEDALIST "A".....492
EA-4T, & 6T.....323
EA-5RVT.....327
EA-7P.....333
EA-8P.....339
EA-10.....344
EA-12RVT.....345
EA-15RVT.....351
EA-16RVT.....355
EA-22RVT.....359
EA-25.....360
EA-26RVT.....361
EA-28RVT.....365
EA-30.....369
EA-32RVT.....370
EA-33RVT.....374
EA-35.....378
EA-35T.....382
EA-50.....386
EA-50T.....388
EA-65.....390
EA-70.....394
EA-71.....395
EA-72.....399
EA-300RVT.....403
EA-500T.....407
EH-100.....11
EH-100.....13
EH-125.....15
EH-125.....17
EH-150.....19
EH-150.....20
EH-160.....24
EH-185.....28
EH-185.....29
EH-195.....30
FALCON.....315
FALCON III.....460
GA-CUSTOM.....61
GA-1RT-1.....62

AMPLIFIER NAME OR MODEL PAGE

GA-1RVT....67
GA-2RVT....71
GA-3RV....78
GA-4RE....82
GA-5....85
GA-5T....87
GA-6....93
GA-8....104
GA-8....106
GA-8T....110
GA-9....114
GA-14....116
GA-15....120
GA-15RVT....124
GA-16T....127
GA-17RVT....131
GA-18T....135
GA-19RVT....139
GA-20....145
GA-20T....149
GA-20RVT....153
GA-25....157
GA-25RVT....158
GA-30....159
GA-30....163
GA-30RV....167
GA-30RVT....171
GA-35RVT....175
GA-40....179
GA-40T....183
GA-45RVT....188
GA-46....192
GA-50....196
GA-50T....200
GA-55....201
GA-55RVT....205
GA-60....209
GA-70....210
GA-75....214
GA-75....218
GA-75W....219
GA-77....220
GA-77RET....224
GA-77RET....228
GA-77RVT....232
GA-78....238
GA-78RV....242
GA-79....245
GA-79RVT....249
GA-80....25?
GA-83S....25?
GA-85....261

AMPLIFIER NAME OR MODEL PAGE

GA-86....265
GA-88S....266
GA-90....270
GA-95....274
GA-100....275
GA-200....279
GA-300RVT....280
GA-400....288
GAV-1....64
GIBSONETTE....101
GIBSONETTE....102
GSS-50....421
GSS-100....426
GTR-600....445
HAWK....317
KAL-1&2....322
KAL-3&4....444
KEA....4
KEH....6
KEH-R....7
LANCER....97
LES PAUL....89
LES PAUL JR....91
LP-1 & 2....452
MAESTRO....187
MAESTRO PLUS 50....498
MASTERTONE....9
MEDALIST 4/10....312
MEDALIST 212....465
MERCURY 1 & 2....300
M-1RVT....409
M-201....413
M-216 RVT....415
PLUS 50....424
REVERB 12....494
SABRE AMP....490
SKYLARK....319
SKYLARK-T....319
STEREO-AMP....57
SUPER-MEDALIST....495
THOR BASS....497
TITAN 1, 3, & 5....304
TITAN MEDALIST....308
TR-1000T....422
TR-1000RVT....423
800B, 2B, 2G &5....480
800G/800-8....472
3100S....425

TECHNICAL BULLETINS

185-195 AMPLIFIERS....487
Hum in 30 Watt 185 Amplifier....488
EH 125 Service Hints....489

PARTS

Parts List for Models without parts listed on Schematics....499

KALAMAZOO

MODEL K E A AMPLIFIER

INSTRUCTIONS

GIBSON INC., KALAMAZOO, MICH.

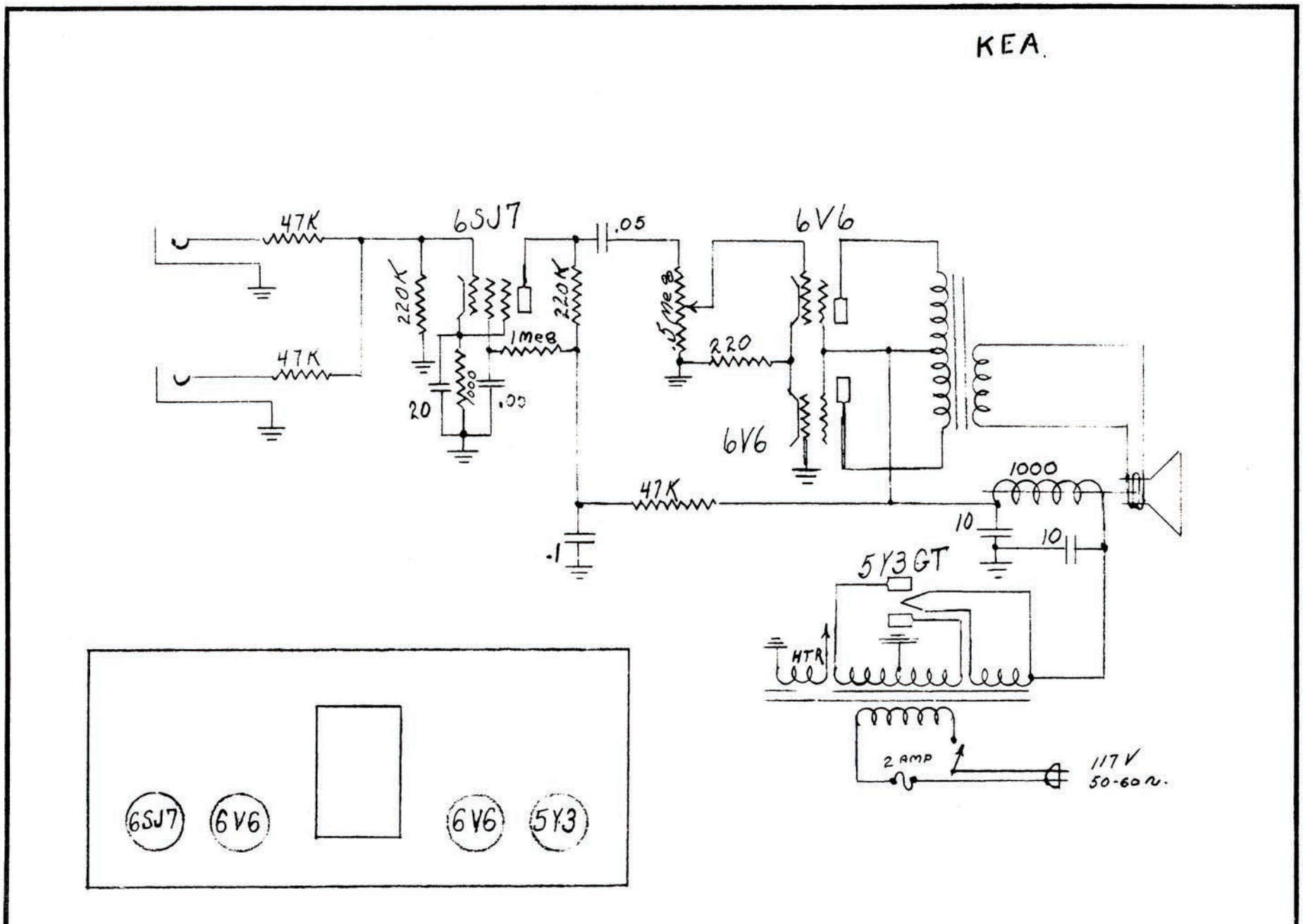
KEA.
47K
47K
6SJ7
220K
220K
1meg
20
1000
.05
.05
6V6
.5 meg
220
6V6
47K
.1
1000
10
10
5Y3GT
HTR
2 AMP
117 V
50-60 ~.
6SJ7
6V6
6V6
5Y3

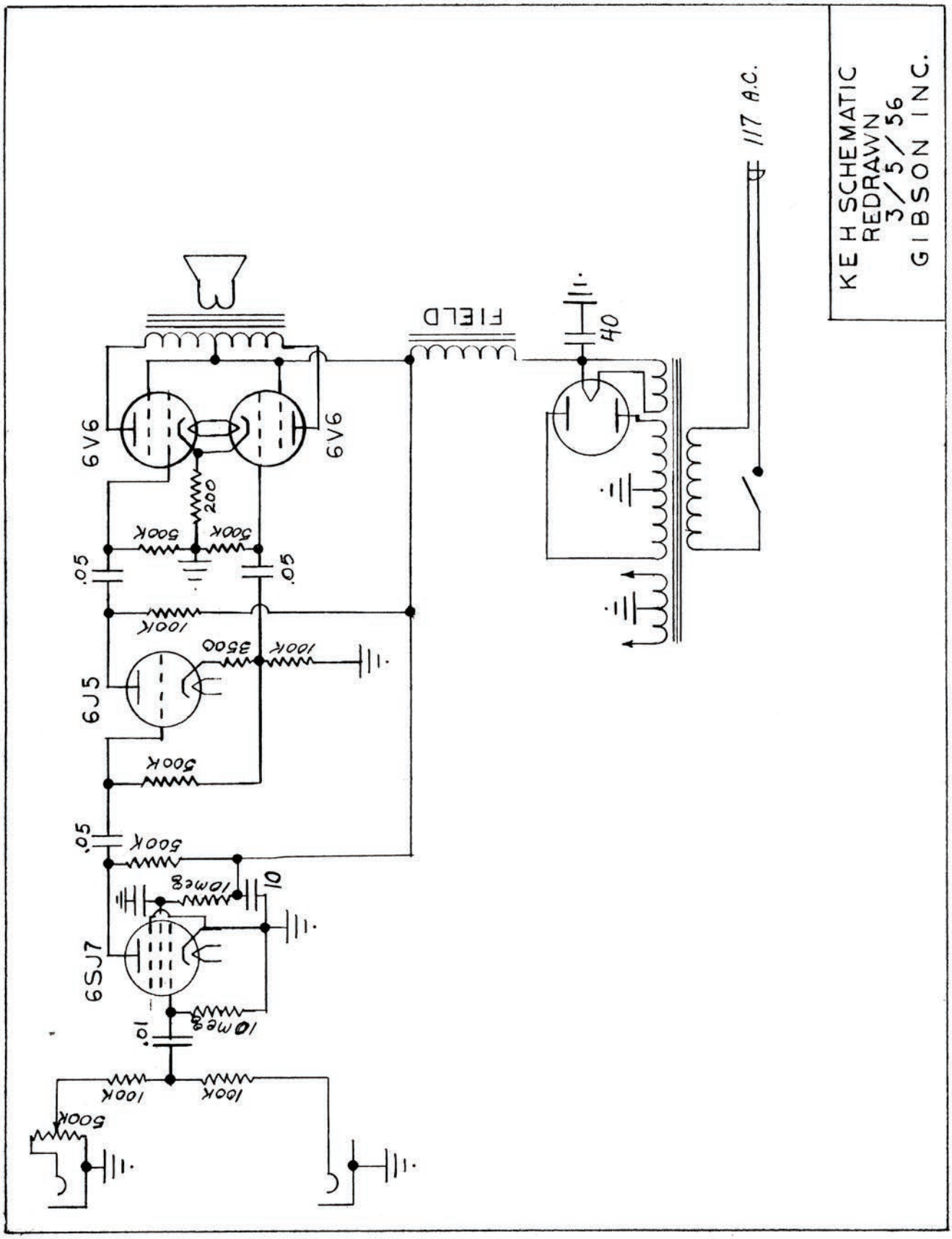
KEH SCHEMATIC
REDRAWN
3/5/56
GIBSON INC.
117 A.C.
FIELD
40
6V6
6V6
200
500K
500K
.05
.05
100K
3500
100K
6J5
500K
.05
500K
10meg
10
6SJ7
10meg
.1
100K
100K
500K

Separate the amplifier and microphone as far as possible to prevent noise interference or howl known as "feedback". Reduce the volume control setting to just below the point where this feedback occurs. The setting of the volume control will vary according to the size of the room, its acoustical properties and also with the distance between the loud speaker and the microphone.

Turn the volume control all the way down when the MICROPHONE receptacle is not in use as hum may otherwise be caused.

GIBSON

MODEL KEH-R AMPLIFIER

INSTRUCTIONS

GIBSON INC., KALAMAZOO, MICH.

OPERATION OF INSTRUMENTS

On the panel of your amplifier will be found a knob and two receptacles marked respectively MICROPHONE and INSTRUMENT.

First plug into the INSTRUMENT receptacle the standard telephone plug you will find on the cord attached to your guitar.

Then turn the switch to the ON POSITION and the tubes will light up. The volume of your guitar should be controlled with the volume control on the instrument. The gain of the amplifier is so regulated that the maximum output of your instrument will not overload it when plugged into either INSTRUMENT receptacle.

It is possible to plug in two instruments by using the MICROPHONE receptacle for the second instrument. In this case the knob on the amplifier panel which controls the gain of the microphone receptacle should be adjusted as follows: Turn the guitar volume control all the way on, with the guitar plugged in the MICROPHONE receptacle. Then adjust the volume control on the panel to the point where the amplifier does not overload or distort when the maximum output of the guitar is produced.

How to use a Microphone with the Amplifier

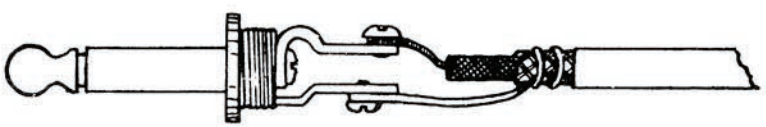

Picture 1

This amplifier may also serve as a public address system by using with it any of the microphones listed in the catalog. These can be purchased through your Gibson dealer.

Fit the end of your microphone cable with a good grade standard telephone plug with a metal housing. The correct method of connection is shown in Picture 1.

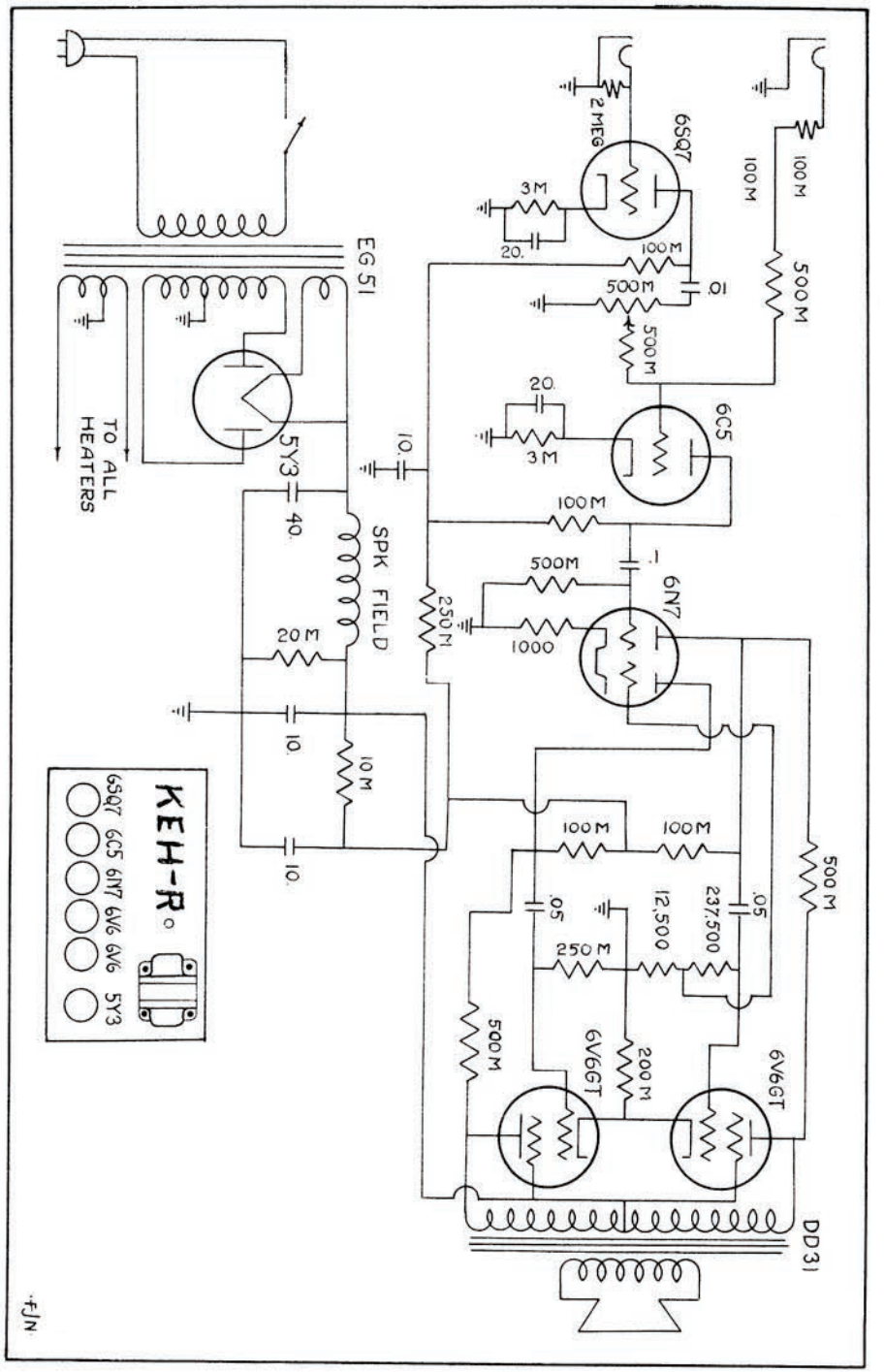

GIBSON

MASTERTONE
SPECIAL

INSTRUCTIONS

GIBSON INC., KALAMAZOO, MICH.

On the panel of your amplifier is a knob which is a combination "on and off" switch and volume control. To put in operation, plug supply cord into any 110 volt, 50 to 60 cycle, current.

Turn knob on amplifier as far toward right as it will go and allow tubes to warm up for approximately one minute.

Then plug one end of instrument cord into jack at extreme left of amplifier panel and other end of cord into jack located on instrument.

Adjust tone and volume controls on instrument to desired position and you are now ready to play.

For best results, play with instrument in back or to one side of amplifier and as far away from amplifier as cord permits.

Occasionally, reversing position of supply cord prongs will reduce hum and eliminate other objectionable noises.

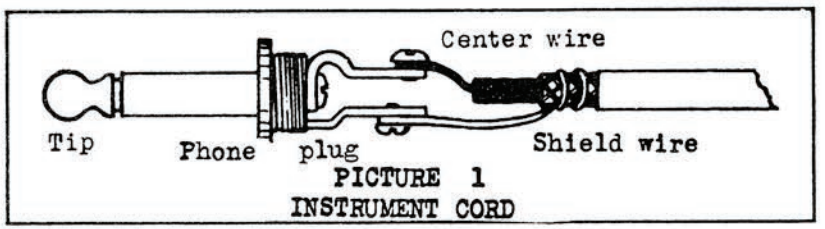

PICTURE 1
INSTRUMENT CORD

Make sure that all connections are firmly in place and that electric current is turned on. The tips on both ends of phone plugs in instrument cord should be checked frequently -- if they have worked loose, tighten securely.

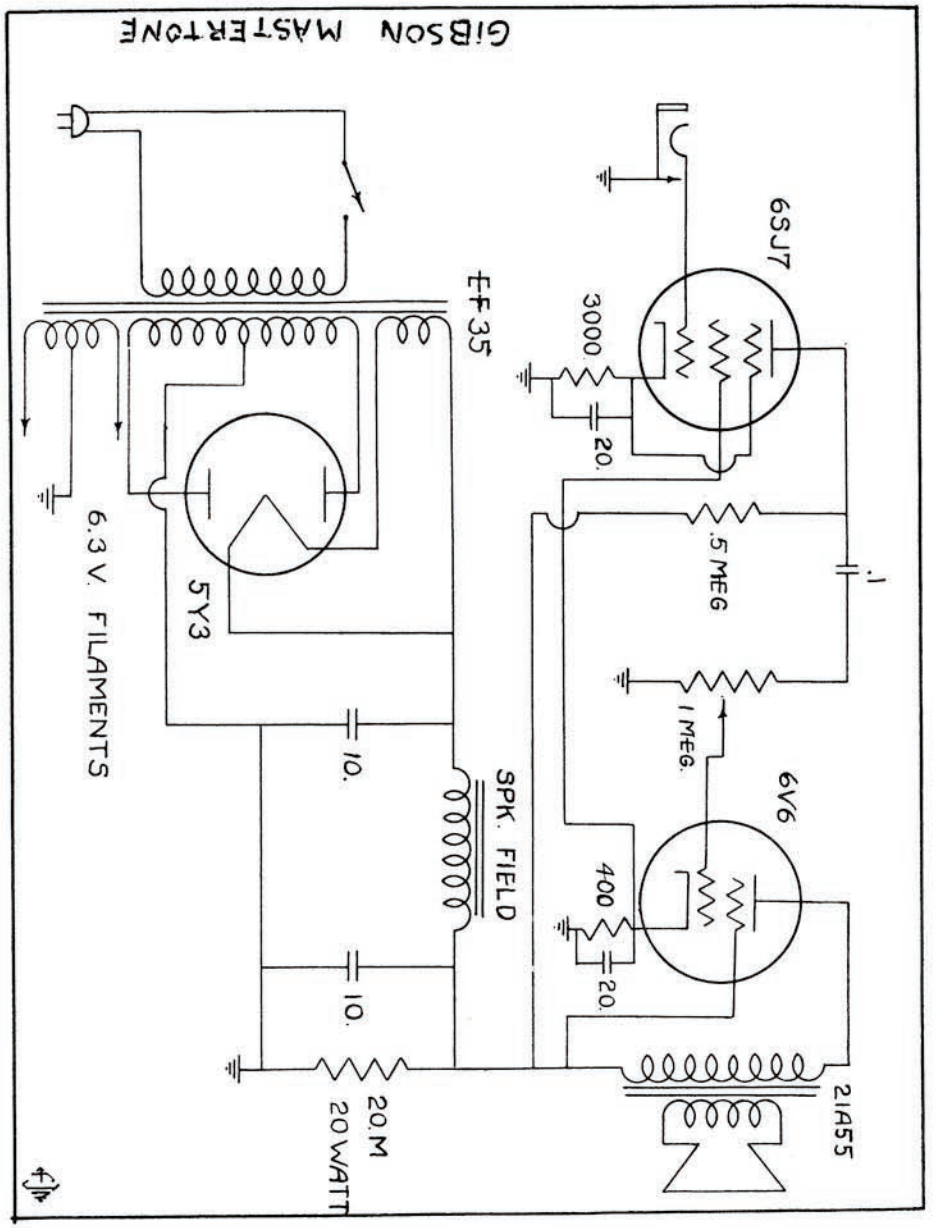

Separate the amplifier and microphone as far as possible to prevent noise interference or howl known as "feedback". Reduce the volume control setting to just below the point where this feedback occurs. The setting of the volume control will vary according to the size of the room, its acoustical properties and also with the distance between the loud speaker and the microphone.

Turn the volume control all the way down when the MICROPHONE receptacle is not in use as hum may otherwise be caused.

The fuse in EH-100 amplifier is a type AG of three ampere rating. Do not use fuses of higher rating.

GIBSON

MODEL EH-100 AMPLIFIER

INSTRUCTIONS

GIBSON INC., KALAMAZOO, MICH.

OPERATION OF INSTRUMENTS

On the panel of your amplifier will be found a knob and two receptacles marked respectively MICROPHONE and INSTRUMENT.

First plug into the INSTRUMENT receptacle the standard telephone plug you will find on the cord attached to your guitar.

Then turn the knob until a click is heard and the tubes light up. The volume of your guitar should be controlled with the volume control on the instrument. The gain of the amplifier is so regulated that the maximum output of your instrument will not overload it when plugged into the INSTRUMENT receptacle.

It is possible to plug in two instruments by using the MICROPHONE receptacle for the second instrument. In this case the knob on the amplifier panel which controls the gain of the microphone receptacle should be adjusted as follows: Turn the guitar volume control all the way on, with the guitar plugged in the MICROPHONE receptacle. Then adjust the volume control on the panel to the point where the amplifier does not overload or distort when the maximum output of the guitar is produced.

How to use a Microphone with the Amplifier

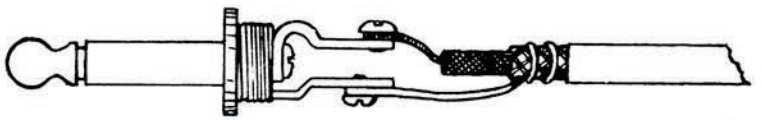

Picture 1

This amplifier may also serve as a public address system by using with it any of the standard diaphragm type crystal microphones. A crystal microphone of the diaphragm type should be used because of its higher output level. These can be purchased through your Gibson Dealer.

Fit the end of your microphone cable with a good grade standard telephone plug with a metal housing. The correct method of connection is shown in Picture 1.

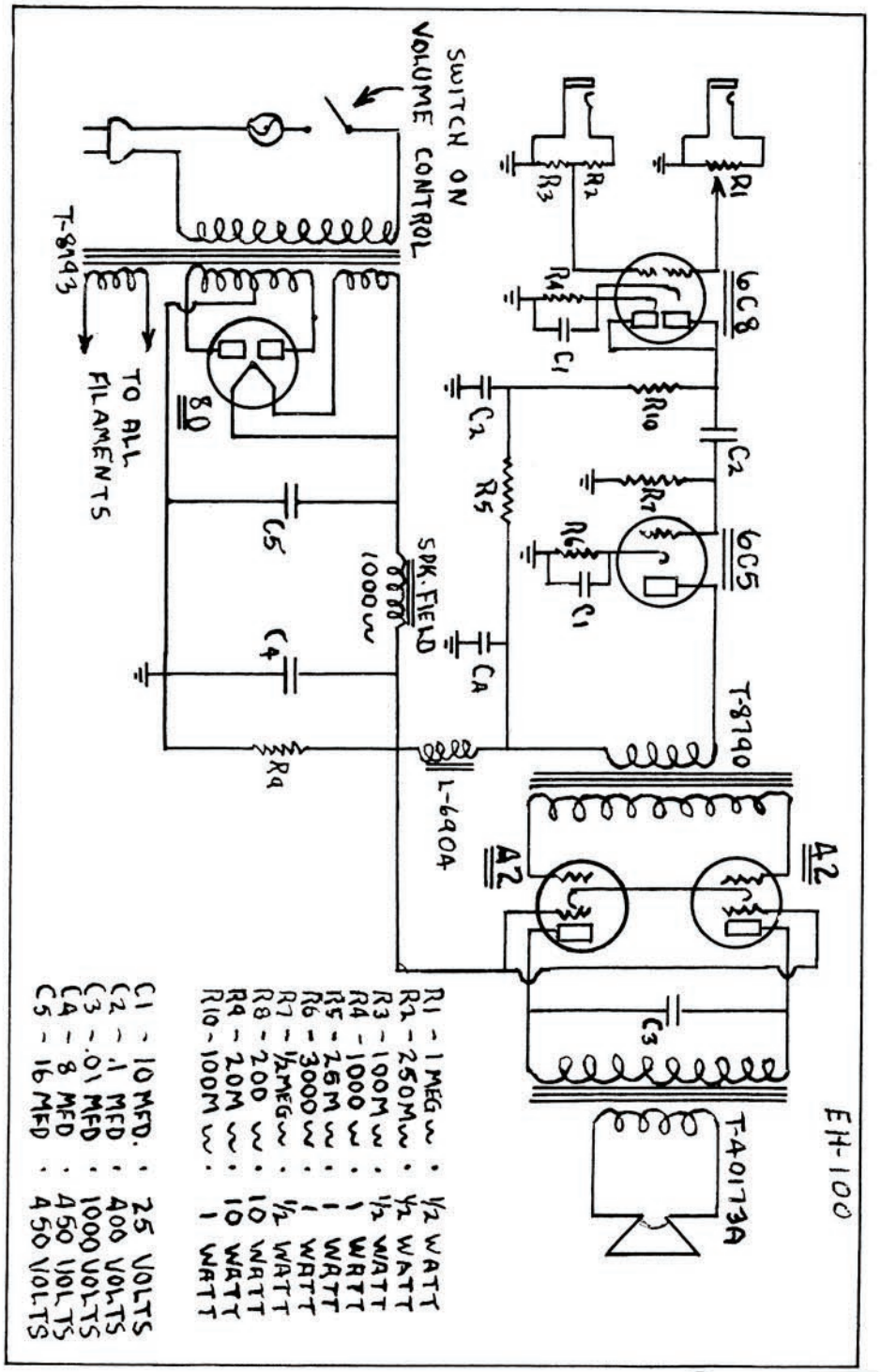

Separate the amplifier and microphone as far as possible to prevent noise interference or howl known as "feedback". Reduce the volume control setting to just below the point where this feedback occurs. The setting of the volume control will vary according to the size of the room, its acoustical properties and also with the distance between the loud speaker and the microphone.

Turn the volume control all the way down when the MICROPHONE receptacle is not in use as hum may otherwise be caused.

The fuse in EH-100 amplifier is a type AG of three ampere rating. Do not use fuses of higher rating.

GIBSON

MODEL EH-100 AMPLIFIER

INSTRUCTIONS

GIBSON INC., KALAMAZOO, MICH.

OPERATION OF INSTRUMENTS

On the panel of your amplifier will be found a knob and three receptacles marked respectively MICROPHONE and INSTRUMENT.

First plug into either INSTRUMENT receptacle the standard telephone plug you will find on the cord attached to your guitar.

Then turn the switch to the ON POSITION and the tubes will light up. The volume of your guitar should be controlled with the volume control on the instrument. The gain of the amplifier is so regulated that the maximum output of your instrument will not overload it when plugged into either INSTRUMENT receptacle.

It is possible to plug in three instruments by using the MICROPHONE receptacle for the third instrument. In this case the knob on the amplifier panel which controls the gain of the microphone receptacle should be adjusted as follows: Turn the guitar volume control all the way on, with the guitar plugged in the MICROPHONE receptacle. Then adjust the volume control on the panel to the point where the amplifier does not overload or distort when the maximum output of the guitar is produced.

How to use a Microphone with the Amplifier

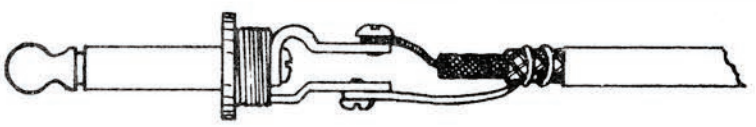

Picture 1

This amplifier may also serve as a public address system by using with it any of the microphones listed in the catalog. These can be purchased through your Gibson dealer.

Fit the end of your microphone cable with a good grade standard telephone plug with a metal housing. The correct method of connection is shown in Picture 1.

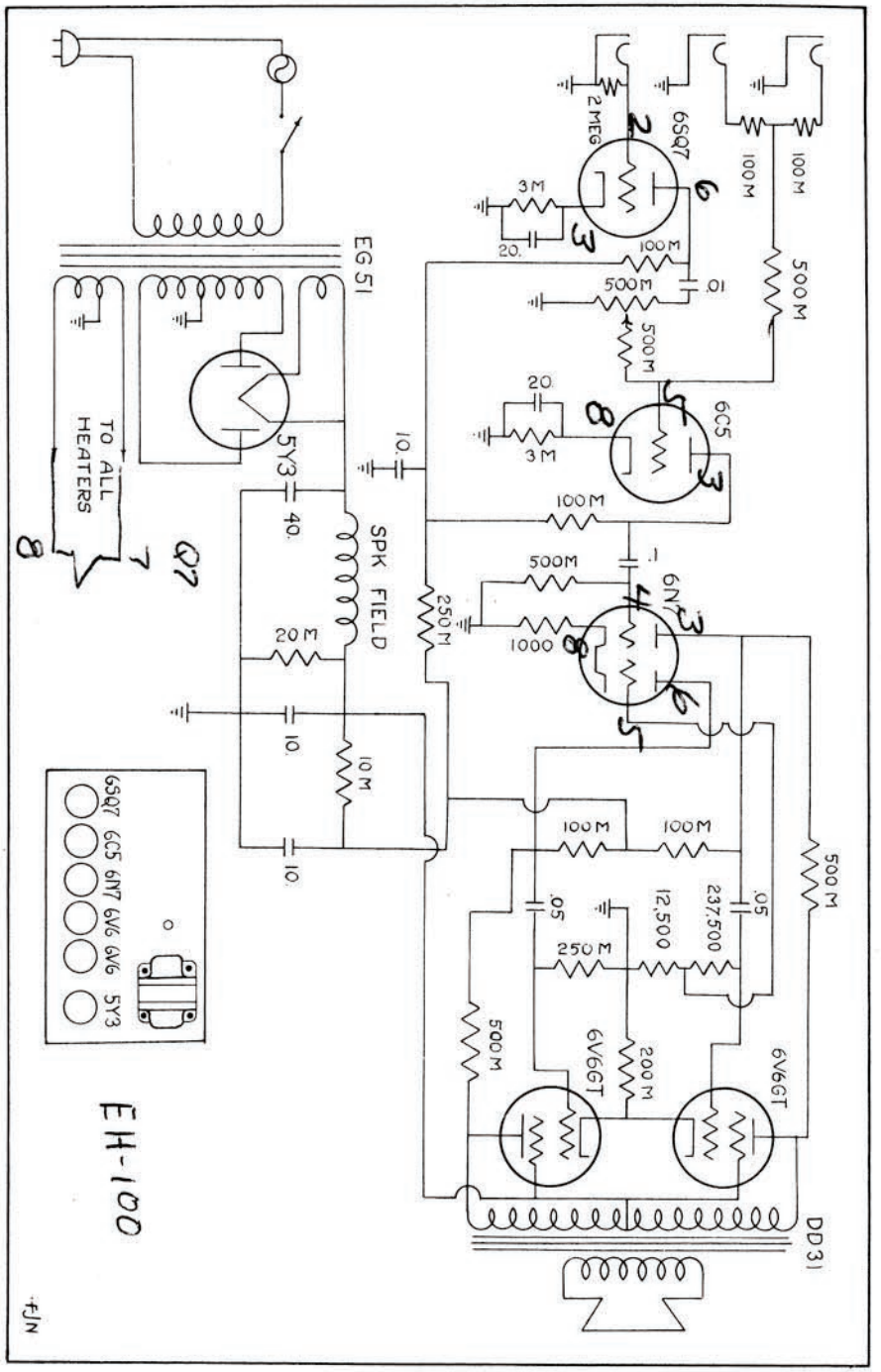

Separate the amplifier and microphone as far as possible to prevent noise interference or howl known as "feedback". Reduce the volume control setting to just below the point where this feedback occurs. The setting of the volume control will vary according to the size of the room, its acoustical properties and also with the distance between the loud speaker and the microphone.

Turn the volume control all the way down when the MICROPHONE receptacle is not in use as hum may otherwise be caused.

The fuse in EH-125 amplifier is a type AG of three ampere rating. Do not use fuses of higher rating.

GIBSON

MODEL EH-125 AMPLIFIER

INSTRUCTIONS

GIBSON INC., KALAMAZOO, MICH.

OPERATION OF INSTRUMENTS

On the panel of your amplifier will be found a knob and three receptacles marked respectively MICROPHONE and INSTRUMENT.

First. plug into either INSTRUMENT receptacle the standard telephone plug you will find on the cord attached to your guitar.

Then turn the switch to the ON POSITION and the tubes will light up. The volume of your guitar should be controlled with the volume control on the instrument. The gain of the amplifier is so regulated that the maximum output of your instrument will not overload it when plugged into either INSTRUMENT receptacle.

It is possible to plug in three instruments by using the MICROPHONE receptacle for the third instrument. In this case the knob on the amplifier panel which controls the gain of the microphone receptacle should be adjusted as follows: Turn the guitar volume control all the way on, with the guitar plugged in the MICROPHONE receptacle. Then adjust the volume control on the panel to the point where the amplifier does not overload or distort when the maximum output of the guitar is produced.

How to use a Microphone with the Amplifier

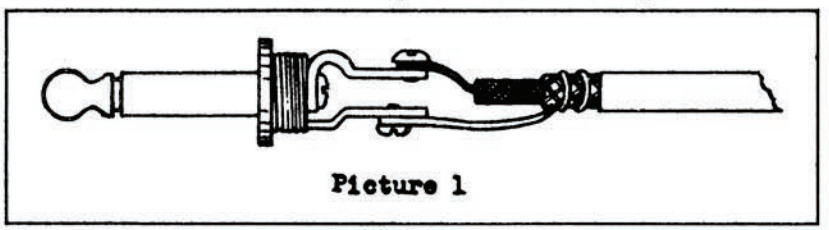

Picture 1

This amplifier may also serve as a public address system by using with it any of the microphones listed in the catalog. These can be purchased through your Gibson dealer.

Fit the end of your microphone cable with a good grade standard telephone plug with a metal housing. The correct method of connection is shown in Picture 1.

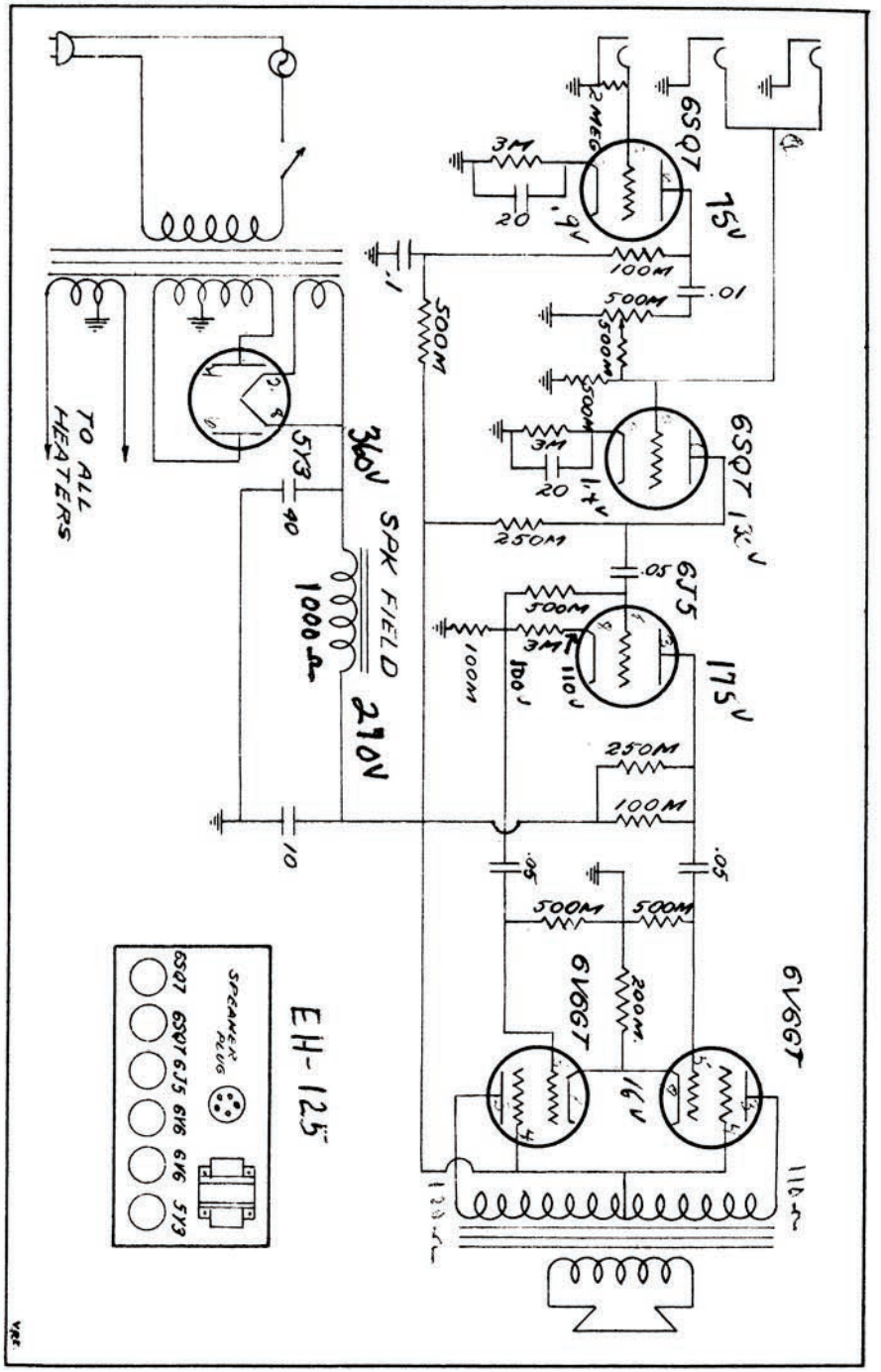

Separate the amplifier and microphone as far as possible to prevent noise interference or howl known as "feedback". Reduce the volume control setting to just below the point where this feedback occurs. The setting of the volume control will vary according to the size of the room, its acoustical properties and also with the distance between the loud speaker and the microphone.

Turn the volume control all the way down when the MICROPHONE receptacle is not in use as hum may otherwise be caused.

The fuse in EH-125 amplifier is a type AG of three ampere rating. Do not use fuses of higher rating.

GIBSON

MODEL EH-125 AMPLIFIER

INSTRUCTIONS

GIBSON INC., KALAMAZOO, MICH.

OPERATION OF INSTRUMENTS

On the panel of your amplifier will be found a knob and three receptacles marked respectively MICROPHONE and INSTRUMENT.

First plug into either INSTRUMENT receptacle the standard telephone plug you will find on the cord attached to your guitar.

Then turn the switch to the ON POSITION and the tubes will light up. The volume of your guitar should be controlled with the volume control on the instrument. The gain of the amplifier is so regulated that the maximum output of your instrument will not overload it when plugged into either INSTRUMENT receptacle.

It is possible to plug in three instruments by using the MICROPHONE receptacle for the third instrument. In this case the knob on the amplifier panel which controls the gain of the microphone receptacle should be adjusted as follows: Turn the guitar volume control all the way on, with the guitar plugged in the MICROPHONE receptacle. Then adjust the volume control on the panel to the point where the amplifier does not overload or distort when the maximum output of the guitar is produced.

How to use a Microphone with the Amplifier

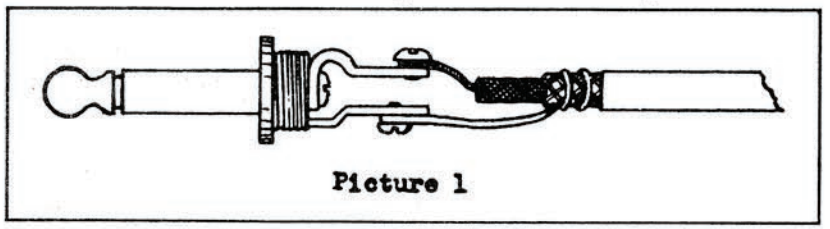

Picture 1

This amplifier may also serve as a public address system by using with it any of the microphones listed in the catalog. These can be purchased through your Gibson dealer.

Fit the end of your microphone cable with a good grade standard telephone plug with a metal housing. The correct method of connection is shown in Picture 1.

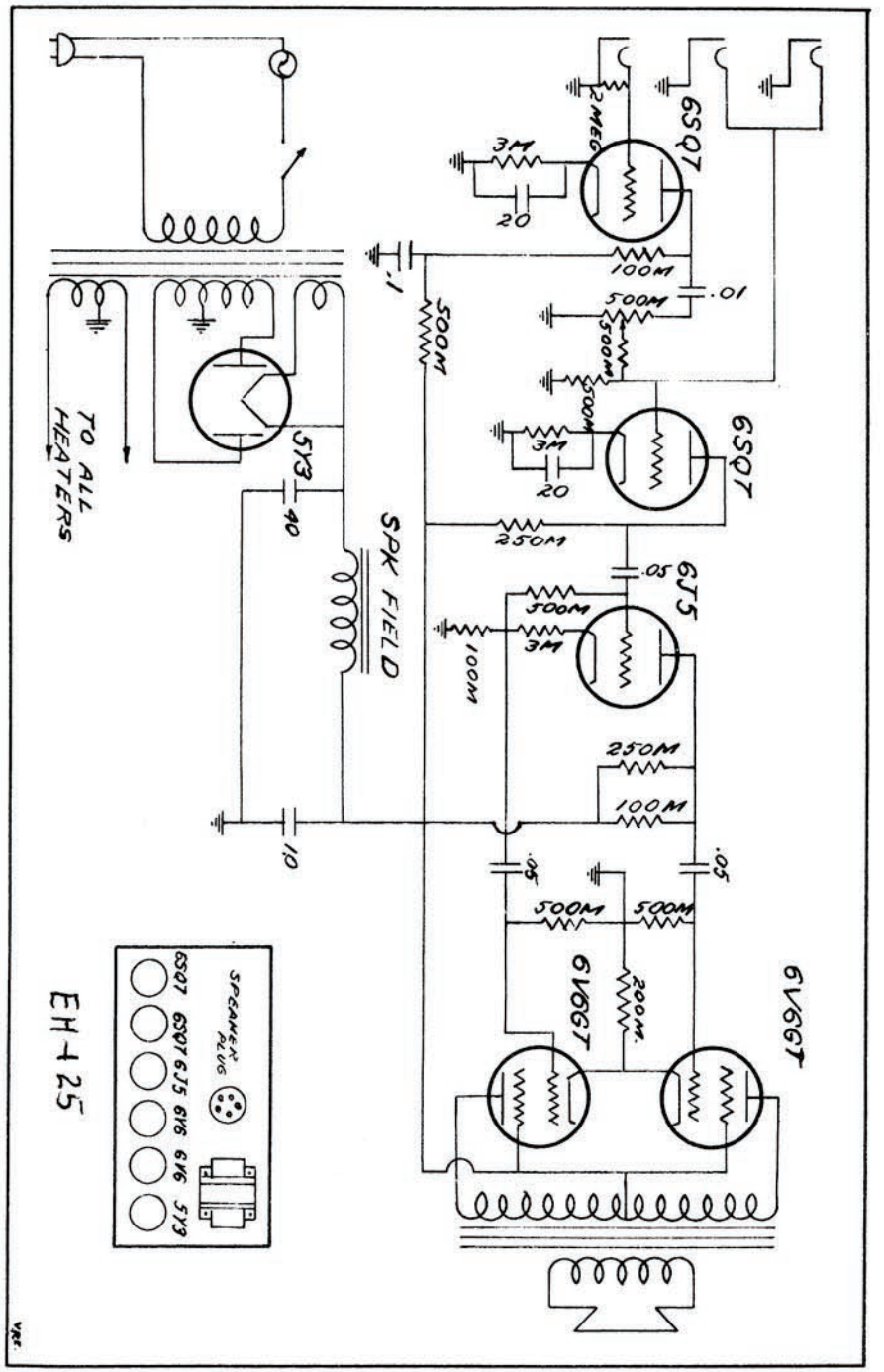

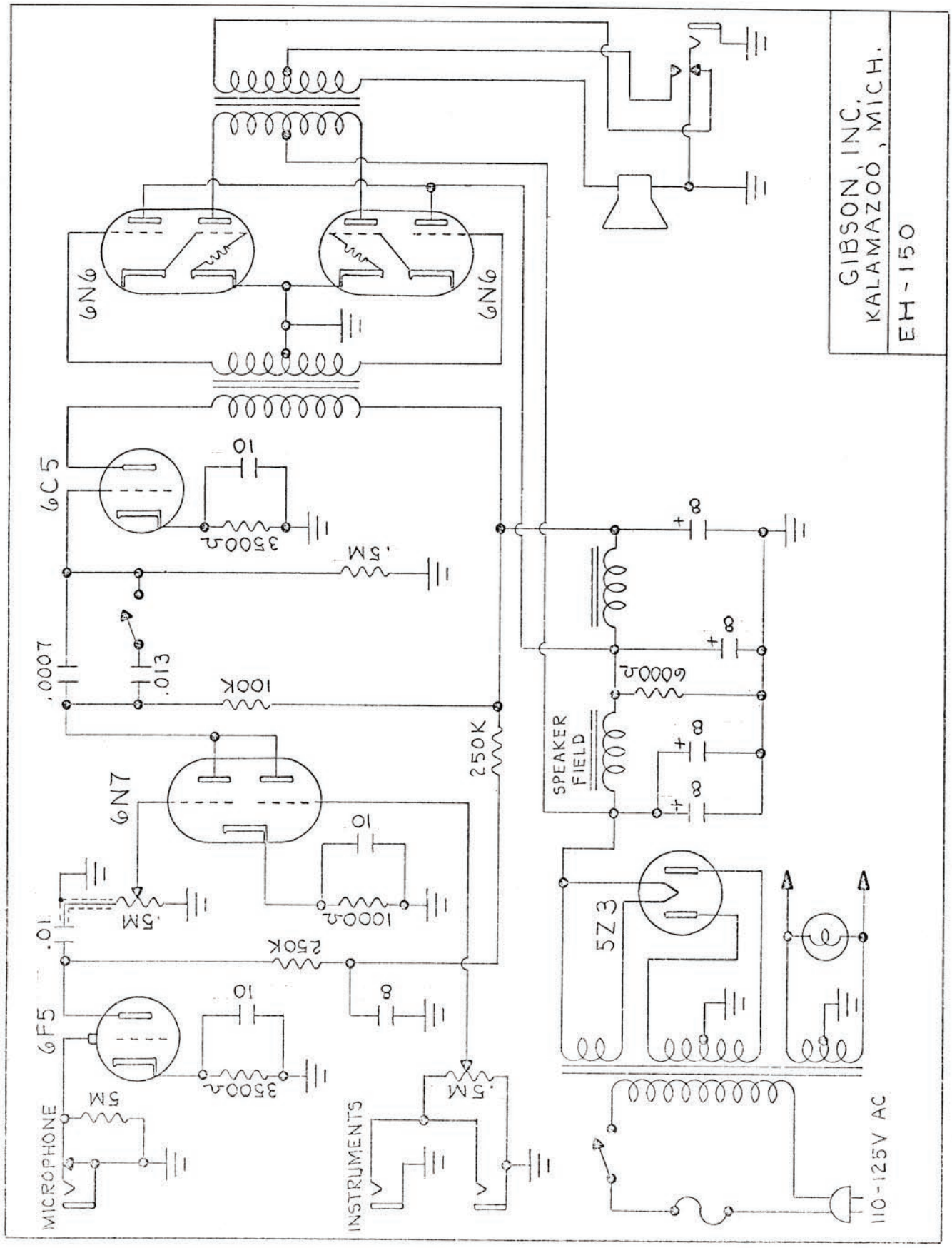
GIBSON, INC.
KALAMAZOO, MICH.
EH-150
6N6
6N6
6C5
.01
3500Ω
.5M
.0007
.013
100K
250K
6N7
.01
.5M
1000Ω
.01
250K
6F5
.01
3500Ω
8
.5M
MICROPHONE
INSTRUMENTS
.5M
8
8
8
6000Ω
SPEAKER FIELD
5Z3
110-125V AC

GIBSON

MODEL EH-150 AMPLIFIER

INSTRUCTIONS

GIBSON INC., KALAMAZOO, MICH.

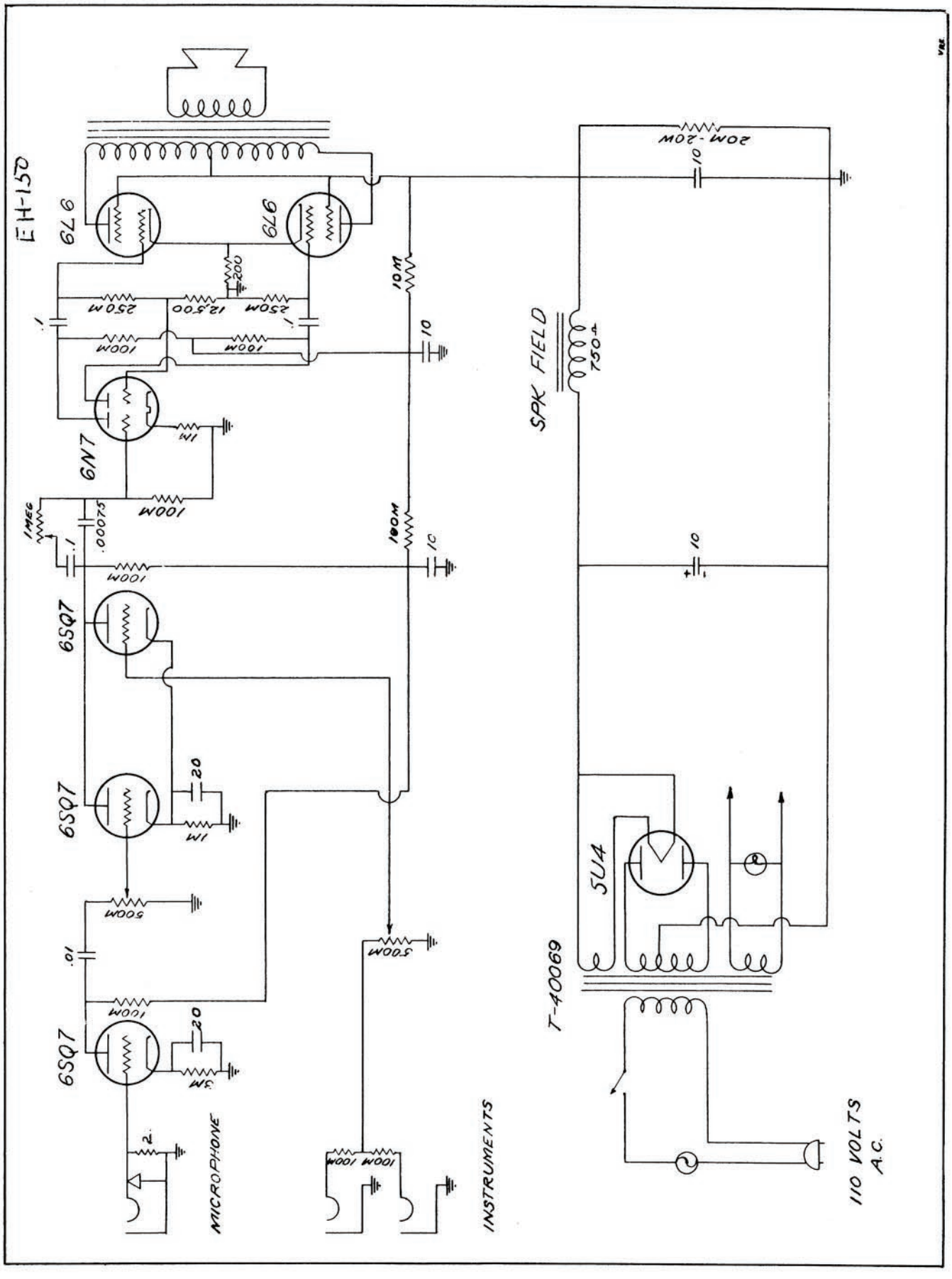
EH-150
6L6
6L6
200
250M
12,500
250M
.1
.1
100M
100M
10M
10
6N7
1M
1MEG
.00075
.1
100M
100M
100M
10
6SQ7
6SQ7
20
1M
500M
.01
100M
20
3M
6SQ7
2
MICROPHONE
500M
100M 100M
INSTRUMENTS
20M-20W
10
SPK FIELD
750Ω
10
5U4
T-40069
110 VOLTS
A.C.



FIGURE A

OPERATION OF INSTRUMENTS

When either one or two instruments are plugged into the sockets marked INSTRUMENTS, three stages of amplification are used, the total gain being controlled by the volume control marked INSTRUMENTS. The total gain (with the volume control all the way on) has been adjusted so that the amplifier will deliver full output without distortion when used with any of the GIBSON electrical instruments.

The socket marked MICROPHONE may also be used with any of the GIBSON electrical instruments in which case four stages of amplification are called into use. When used this way a careful setting of the volume control marked MICROPHONE must be made to avoid overload and consequent distortion. This adjustment can be easily made by turning the volume control on the guitar or other instrument all the way on and setting the MICROPHONE control at the point where no distortion occurs when the strings are struck with maximum force. By utilizing the MICROPHONE socket in this way a third instrument can be plugged in, making a total of three electrical instruments which may be used and blended.

OPERATION OF THE MICROPHONE

Because of the high power output, high gain and high fidelity characteristics of the GIBSON EH-150 amplifier it makes an exceptionally fine public address system when used with either the crystal, dynamic or velocity types of microphones.

While the amplifier will operate very well with any of the crystal, medium or high impedance dynamic or velocity (ribbon) microphones, it is recommended that, before investing in a microphone, you consult your GIBSON dealer. Authorized GIBSON dealers can supply you with a microphone which has been selected and matched to the amplifier, thus insuring the most faithful reproduction of voice and music. These microphones are equipped with 25 foot rubber covered, shielded cords and are fitted with the same high grade shielded plug that is supplied with all GIBSON instruments.

If it is desired to use microphones of other make it is important that the GIBSON 75A or similar shielded plug be attached to the cord. The ordinary phone plug with bakelite or other non shielded cover is not suitable because the leads from the microphone must be completely shielded. Otherwise objectionable hum will result. Figure A illustrates the proper way to connect the plug to the microphone cable.

To use the microphone, insert the plug in the MICROPHONE socket and advance the MICROPHONE volume control until a feedback squeal or howl is produced in the loudspeaker. Reduce the volume control to just below the feedback point. This setting will vary considerably depending upon the size of the room, its acoustical properties and the distance between the microphone and loudspeaker. Feedback is the limiting factor in all public address installations and is caused when the level of sound from the loudspeakers is sufficient to actuate the microphone. The general rule when setting up the equipment is to place the loudspeaker as far from the microphone as possible.

The volume controls INSTRUMENTS and MICROPHONE, being completely independent of each other, allow the inputs from the various sources to be "mixed" or blended. Because of this flexibility many unusual effects can be easily worked out.

If the MICROPHONE socket is not in use turn the MICROPHONE volume control all the way off.

USE OF THE TREBLE TONE * BASS TONE CONTROL

In the TREBLE TONE position the low pitched strings of the instrument are automatically reduced in volume and the high pitched strings are therefore given greater prominence so that the overall tone quality is more brilliant. In the BASS TONE position the low pitched strings are given greater prominence therefore producing a vibrant, mellow tone of entirely new and extremely pleasing quality that opens numerous possibilities for new tonal effects, among them a very effective bass accompaniment for other instruments.

* * * * * * * *

The fuse used in the EH-150 amplifier is a type AG of three ampere rating. DO NOT USE FUSES OF HIGHER RATING.

GIBSON

MODEL EH-160 AMPLIFIER

INSTRUCTIONS

GIBSON INC., KALAMAZOO, MICH.

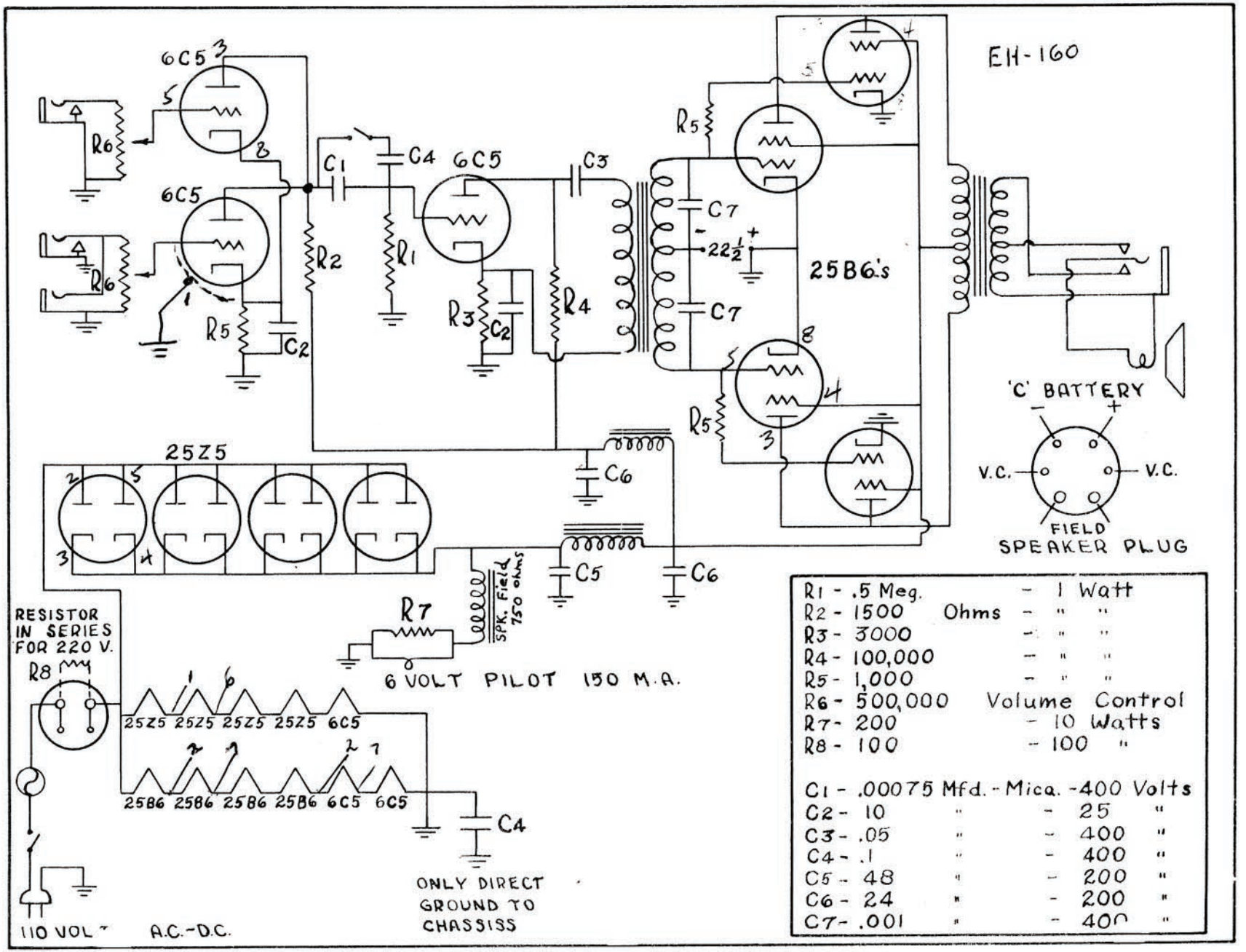

R1 - .5 Meg.		- 1 Watt	
R2 - 1500	Ohms	- "	"
R3 - 3000		- "	"
R4 - 100,000		- "	"
R5 - 1,000		- "	"
R6 - 500,000		Volume Control	
R7 - 200		- 10 Watts	
R8 - 100		- 100 "	
C1 - .00075	Mfd.	- Mica.	-400 Volts
C2 - 10	"	- 25	"
C3 - .05	"	- 400	"
C4 - .1	"	- 400	"
C5 - 48	"	- 200	"
C6 - 24	"	- 200	"
C7 - .001	"	- 400	"

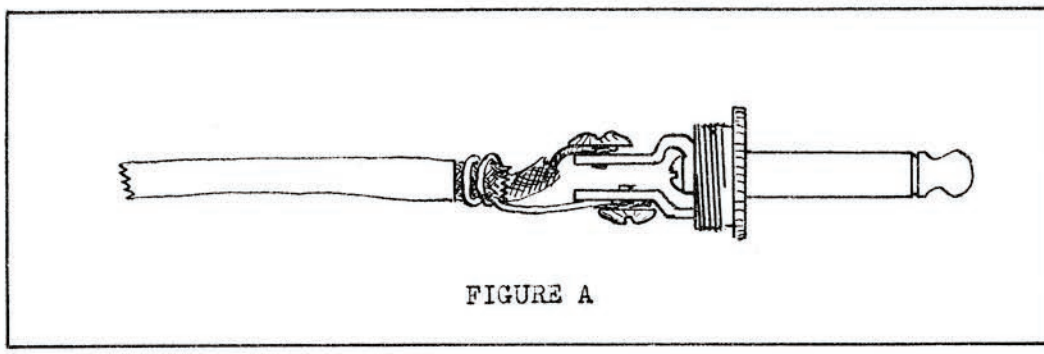

FIGURE A

OPERATION OF INSTRUMENTS

When either one or two instruments are plugged into the sockets marked INSTRUMENTS, three stages of amplification are used, the total gain being controlled by the volume control marked INSTRUMENTS. The total gain (with the volume control all the way on) has been adjusted so that the amplifier will deliver full output without distortion when used with any of the GIBSON electrical instruments.

The socket marked MICROPHONE may also be used with any of the GIBSON electrical instruments. By utilizing the MICROPHONE socket in this way a third instrument can be plugged in, making a total of three electrical instruments which may be used and blended.

OPERATION OF THE MICROPHONE

Because of the high power output, and high fidelity characteristics of the GIBSON EH-160 amplifier it makes an exceptionally fine public address system when used with the special microphone which may be obtained from any GIBSON dealer. Because of the natural characteristics of an AC-DC amplifier the user of most types of microphones on these instruments may receive an electric shock when he touches the microphone. You can however obtain from your GIBSON dealer an insulated microphone specially designed for this instrument and which prevents any possibility of shock to the user. These microphones are provided with 25 feet of rubber covered shielded cord and are fitted with the same high grade shielded plug supplied with all GIBSON instruments. The use of this plug, shown in Figure A. is necessary to the proper operation of a microphone. The proper method of connecting to this plug is also shown in this illustration.

To use the microphone, insert the plug in the MICROPHONE socket and advance the MICROPHONE volume control until a feedback squeal or howl is produced in the loudspeaker. Reduce the volume control to just below the feedback point. This setting will vary considerably depending upon the size of the room, its acoustical properties and the distance between the microphone and loudspeaker. Feedback is the limiting factor in all public address installations and is caused when the level of sound from the loudspeakers is sufficient to actuate the microphone. The general rule when setting up the equipment is to place the loudspeaker as far from the microphone as possible.

The volume controls INSTRUMENTS and MICROPHONE, being completely independent of each other, allow the inputs from the various sources to be "mixed" or blended. Because of this flexibility many unusual effects can be easily worked out.

If the MICROPHONE socket is not in use turn the MICROPHONE volume control all the way off.

USE OF THE ECHO SPEAKER

The GIBSON Echo Speaker comes mounted in an exact duplicate of the EH-160 case and is fitted with a 35 foot rubber covered cord and #75A shielded plug. To place it in operation it is merely necessary to plug it in the ECHO SPEAKER socket on the control board of the amplifier. Its use presents many new possibilities. The true "Echo" effect is obtained by placing the EH-160 speaker and amplifier near the player and the Echo Speaker at an approximate 35 foot distance, preferably further from the audience and to either side. The slight sound wave time lag thus introduced creates a new and beautiful effect.

When using a microphone the additional loudspeaker is also desirable permitting better and more complete coverage of the audience.

USE OF THE NORMAL TONE * BASS TONE CONTROL

In the NORMAL TONE position the low pitched strings of the instrument are automatically reduced in volume and the high pitched strings are therefore given greater prominence so that the overall tone quality is more brilliant. In the BASS TONE position the low pitched strings are given greater prominence therefore producing a vibrant, mellow tone of entirely new and extremely pleasing quality that opens numerous possibilities for new tonal effects, among them a very effective bass accompaniment for other instruments.

* * * * * * * *

The fuse used in the EH-160 amplifier is a type AG of three ampere rating. DO NOT USE FUSES OF HIGHER RATING.

This amplifier will operate on any 110 volt line either AC or DC. An adapter can be secured from your GIBSON dealer for 220 volt operation.

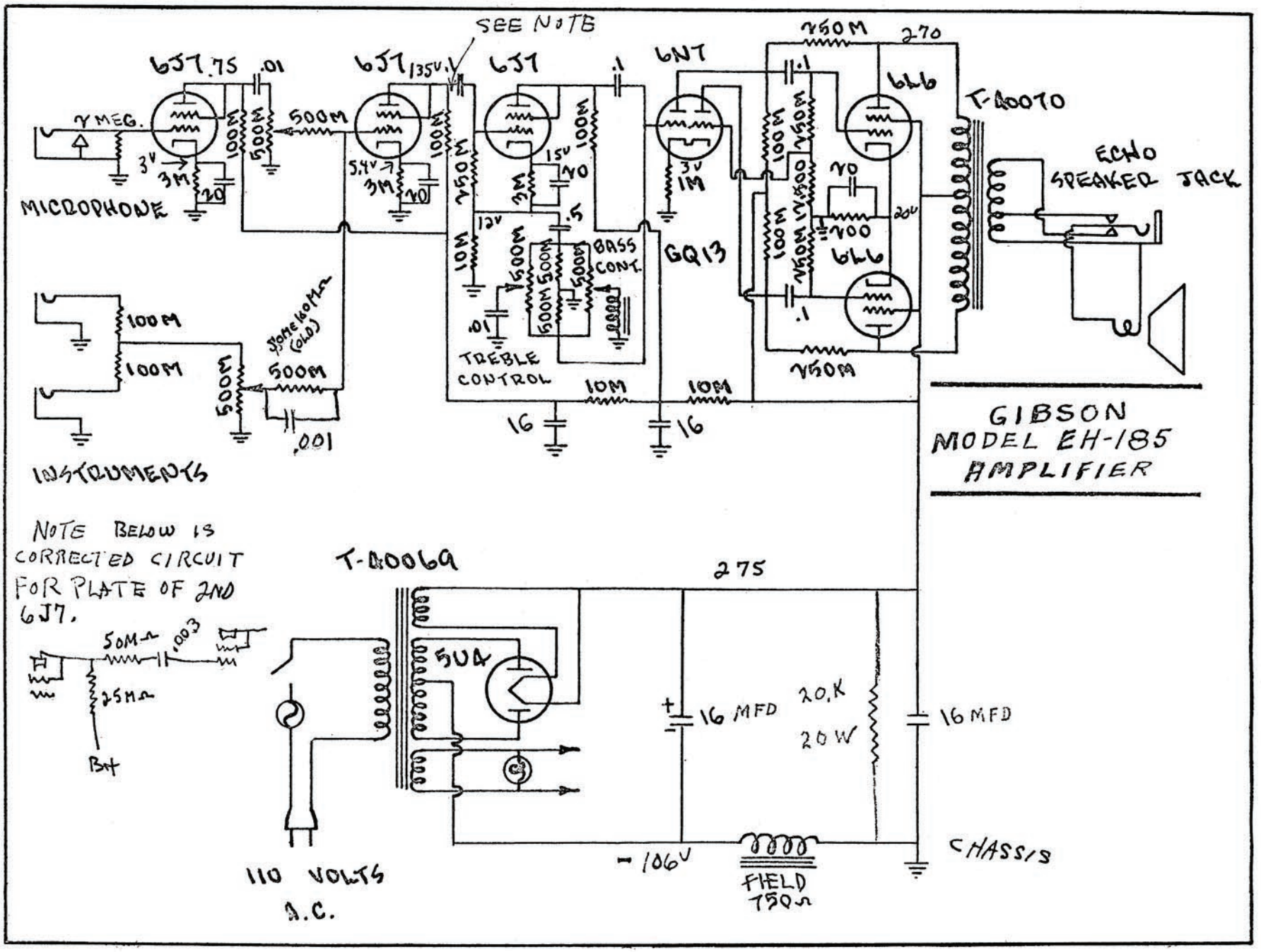
SEE NOTE
6J7 .75
.01
6J7 135V.
6J7
.1
6N7
250M
270
6L6
T-40070
.1
.1
.1

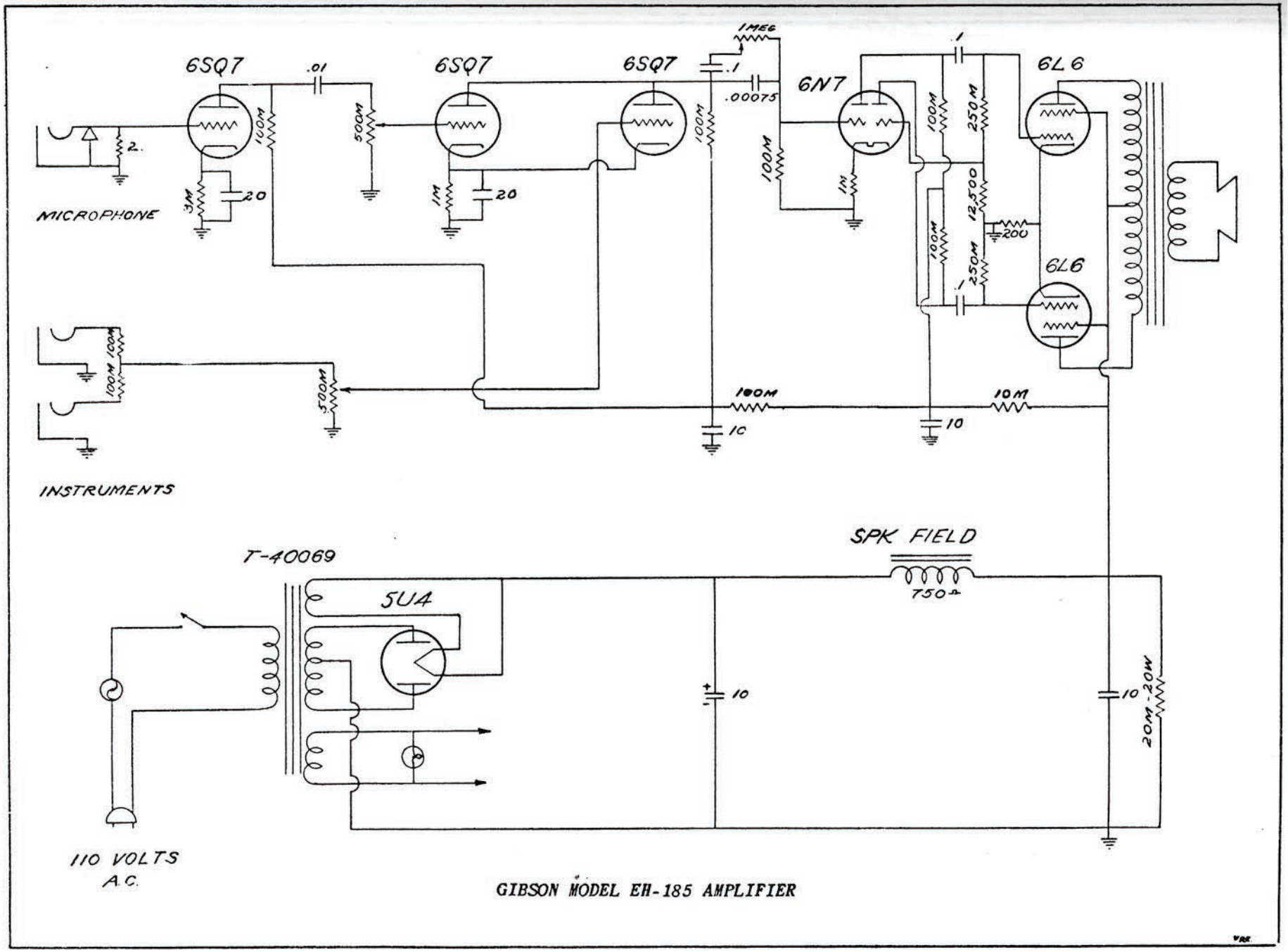

GIBSON MODEL EH-185 AMPLIFIER

GIBSON

A.C. - D.C. AMPLIFIER

EH 195

INSTRUCTIONS

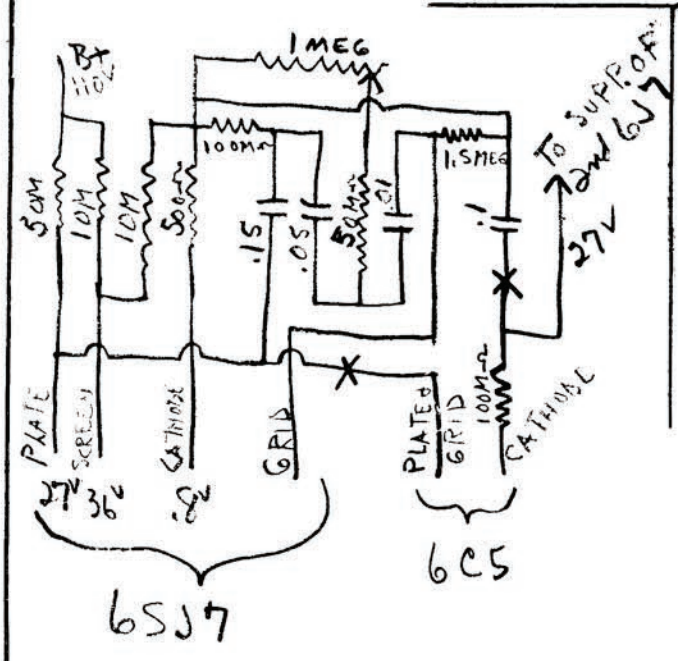

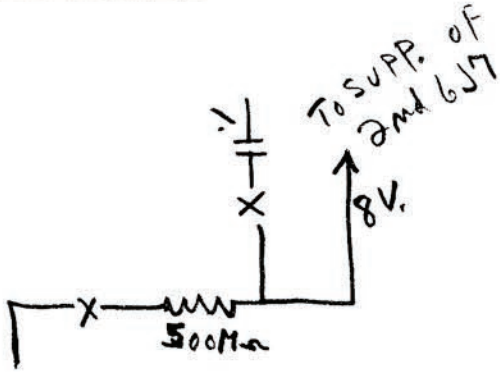

CHANGES MADE WHEN USING ONE TUBE IN VIBRATO

GIBSON INC., KALAMAZOO, MICH.

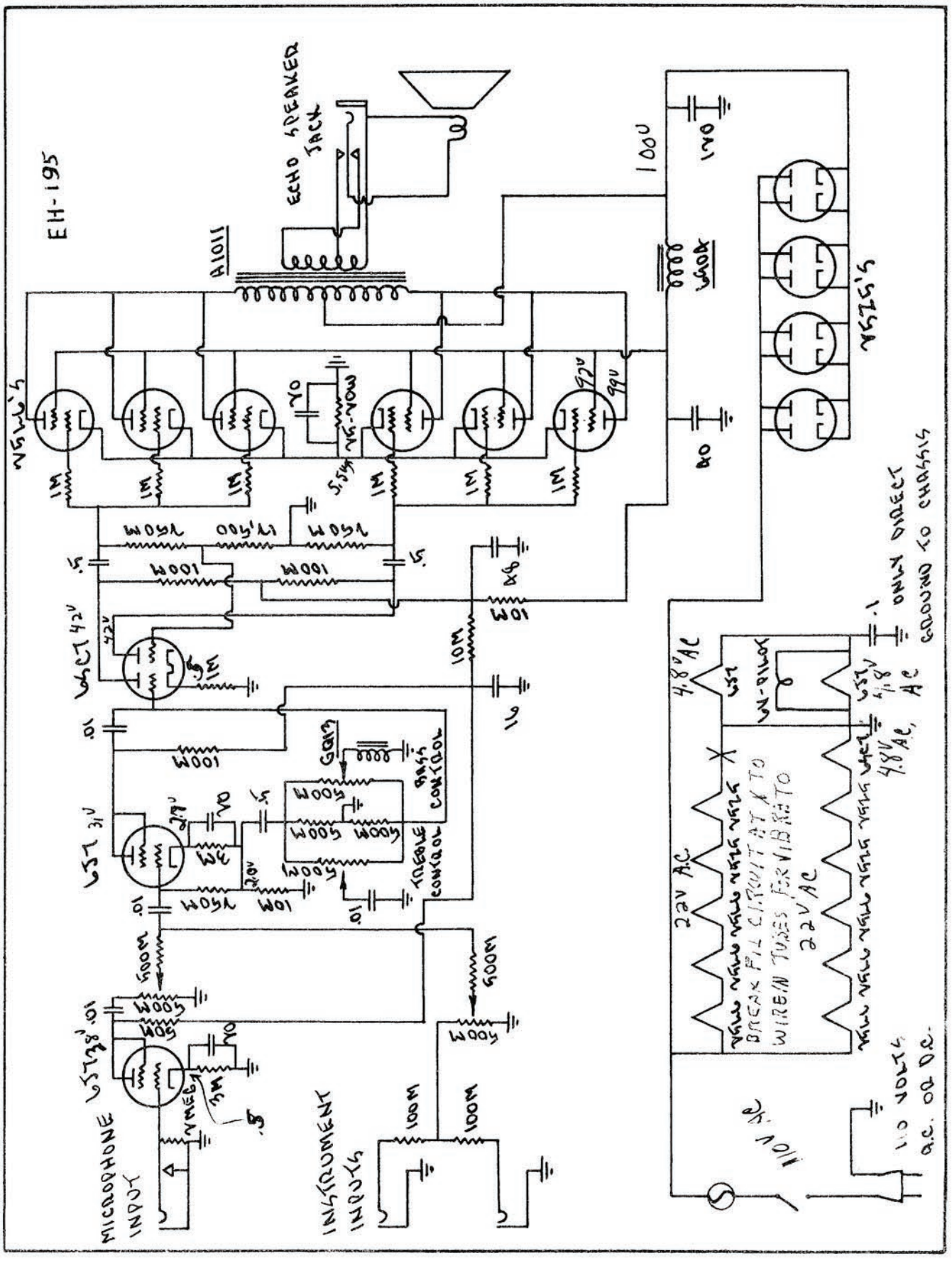
EH-195
ECHO SPEAKER JACK
A1011
100V
VSL6'S
VSL5'S
VS-VOW
5.5V
92V
99V
1M
100M
.5
.01
10M
16
GQ13
BASS CONTROL
TREBLE CONTROL
500M
MICROPHONE INPUT
INSTRUMENT INPUTS
22V A.C.
4.8V AC
BREAK FIL CIRCUIT AT X TO WIRE IN TUBES FOR VIBRATO
ONLY DIRECT GROUND TO CHASSIS
110 VOLTS A.C. OR D.C.

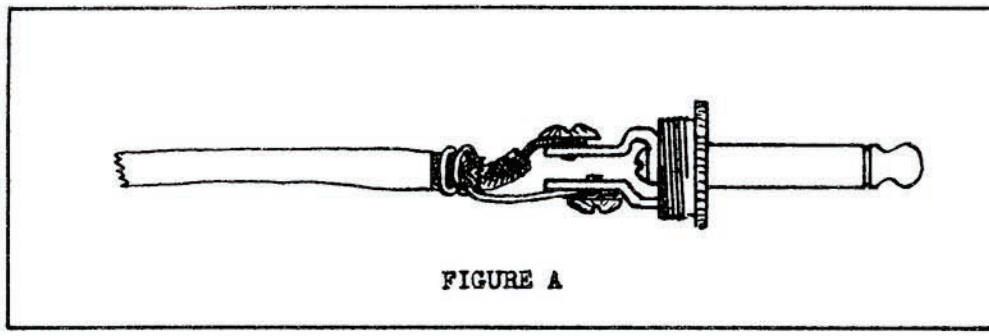

FIGURE A

OPERATION OF INSTRUMENTS

When either one or two instruments are plugged into the sockets marked INSTRUMENTS, three stages of amplification are used, the total gain being controlled by the volume control marked INSTRUMENTS. The total gain (with the volume control all the way on) has been adjusted so that the amplifier will deliver full output without distortion when used with any of the GIBSON electrical instruments.

The socket marked MICROPHONE may also be used with any of the GIBSON electrical instruments in which case four stages of amplification are called into use. When used this way a careful setting of the volume control marked MICROPHONE must be made to avoid overload and consequent distortion. This adjustment can be easily made by turning the volume control on the guitar or other instrument all the way on and setting the MICROPHONE control at the point where no distortion occurs when the strings are struck with maximum force. By utilizing the MICROPHONE socket in this way a third instrument can be plugged in, making a total of three electrical instruments which may be used and blended.

REMOVAL OF AMPLIFIER FROM CASE.

Remove amplifier by grasping the two handles on top and then lifting directly upward and out of case. After the amplifier is removed the lid of case should be placed back on and clamped down allowing the speaker cord to come out of small opening in the lid. When operated this way the case acts as a reflex baffle which reproduces bass tones with greater resonance.

Another advantage in separating these two units is to eliminate tube rattle which has caused synthetic tones to be reproduced previously.

When playing with the amplifier in the case be sure to remove top or catches will vibrate causing a rattle.

USE OF BASS AND TREBLE CONTROL.

With both "BASS" and "TREBLE" controls set in "NORMAL" position all tones from instrument will be reproduced with equal intensity. Setting the "BASS" control at its extreme point on the increase side gives prominence to the bass tones over the others, thus producing a deeper and fuller tone.

The treble tones can be made to predominate by setting the "TREBLE" control on the increase side. This will reproduce a chime like tone rich in higher harmonics and will also enable the artist to pick harmonics with greater ease.

When either the BASS or TREBLE controls are turned to the extreme position on the decrease side the bass or treble tones are reduced in volume leaving the middle register predominating.

Any numerous combinations of tone effect can be produced with the various settings of BASS and TREBLE controls making the electric guitar more versatile than ever.

OPERATION OF THE MICROPHONE

Because of the high power output, high gain and high fidelity characteristics of the GIBSON amplifier it makes an exceptionally fine public address system when used with either the crystal, dynamic or velocity types of microphones.

While the amplifier will operate very well with any of the crystal, medium or high impedance dynamic or velocity (ribbon) microphones, it is recommended that, before investing in a microphone, you consult your GIBSON dealer. Authorized GIBSON dealers can supply you with a microphone which has been selected and matched to the amplifier, thus insuring the most faithful reproduction of voice and music. These microphones are equipped with 25 foot rubber covered, shielded cords and are fitted with the same high grade shielded plug that is supplied with all GIBSON instruments.

If it is desired to use microphones of other make it is important that the GIBSON 75A or similar shielded plug be attached to the cord. The ordinary phone plug with bakelite or other non shielded cover is not suitable because the leads from the microphone must be completely shielded. Otherwise objectionable hum will result. Figure A illustrates the proper way to connect the plug to the microphone cable.

To use the microphone, insert the plug in the MICROPHONE socket and advance the MICROPHONE volume control until a feedback squeal or howl is produced in the loudspeaker. Reduce the volume control to just below the feedback point. This setting will vary considerably depending upon the size of the room, its acoustical properties and the distance between the microphone and loudspeaker. Feedback is the limiting factor in all public address installations and is caused when the level of sound from the loudspeakers is sufficient to actuate the microphone. The general rule when setting up the equipment is to place the loudspeaker as far from the microphone as possible.

The volume controls INSTRUMENTS and MICROPHONE, being completely independent of each other, allow the inputs from the various sources to be "mixed" or blended. Because of this flexibility many unusual effects can be easily worked out.

If the MICROPHONE socket is not in use turn the MICROPHONE volume control all the way off.

USE OF THE ECHO SPEAKER

The GIBSON Echo Speaker comes mounted in an exact duplicate of this case and is fitted with a 35 foot rubber covered cord and #75A shielded plug. To place it in operation it is merely necessary to plug it in the ECHO SPEAKER socket on the control board of the amplifier. Its use presents many new possibilities. The true "Echo" effect is obtained by placing the speaker and amplifier near the player and the Echo Speaker at an approximate 35 foot distance, preferably further from the audience and to either side. The slight sound wave time lag thus introduced creates a new and beautiful effect.

When using a microphone the additional loudspeaker is also desirable permitting better and more complete coverage of the audience.

The fuse used in the amplifier is a type AG of three ampere rating. DO NOT USE FUSES OF HIGHER RATING.

This amplifier will operate on any 110 volt line either AC or DC. An adapter can be secured from your GIBSON dealer for 220 volt operation.

GIBSON

MODEL BR-1 AMPLIFIER

INSTRUCTIONS

GIBSON INC., KALAMAZOO, MICH.

BR-1

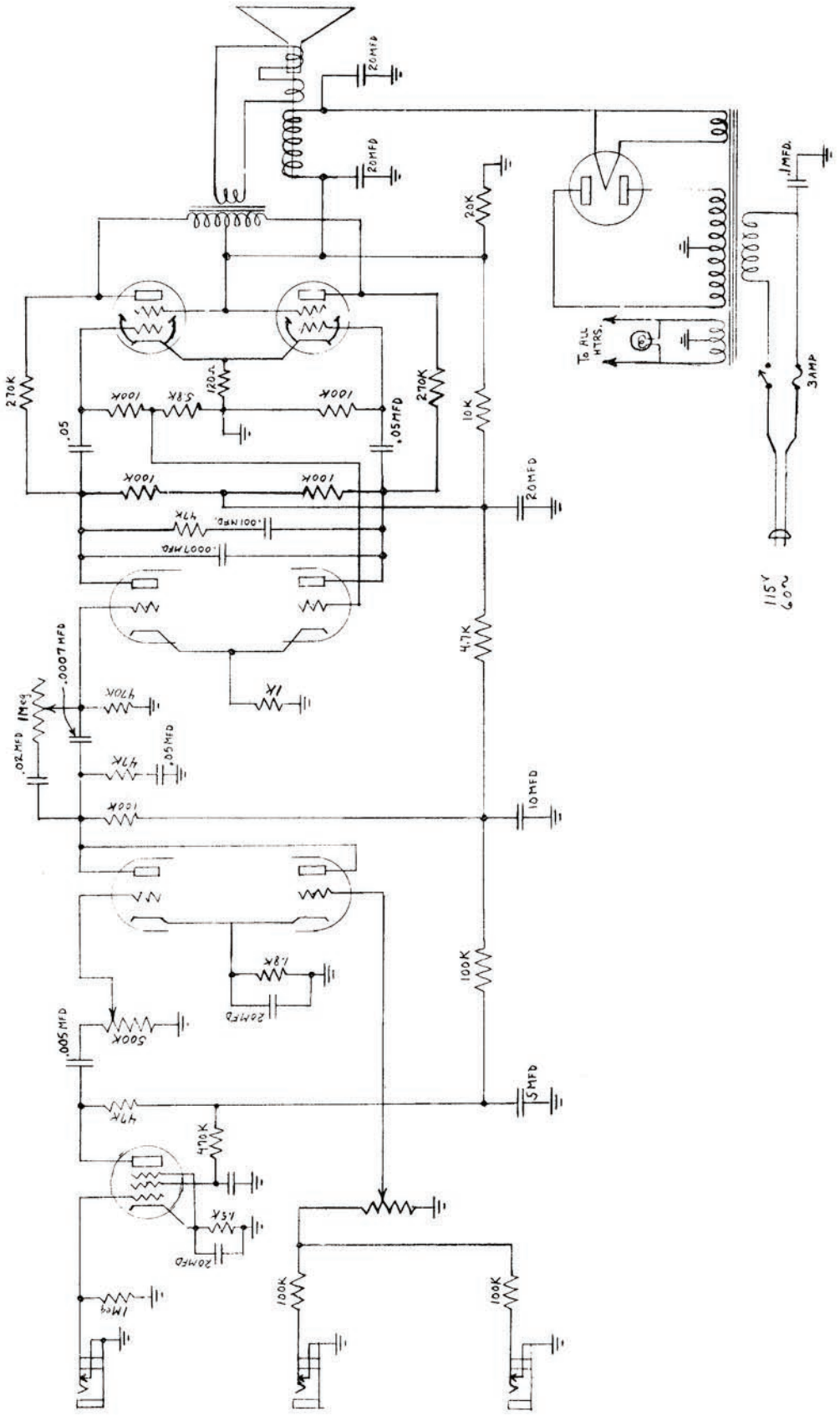
20MFD
20MFD
20K
.1MFD.
TO ALL HTRS.
3AMP
115V 60~
270K
100K
5.8K
120Ω
100K
270K
.05
.05MFD
10K
100K
100K
20MFD
.001MFD.
47K
.0007MFD
4.7K
1K
.0007 MFD
1MEG
.02MFD
47K
47K
.05MFD
100K
10MFD
1.8K
20MFD
500K
.005MFD
47K
5MFD
470K
1.5K
20MFD
1MEG
100K
100K

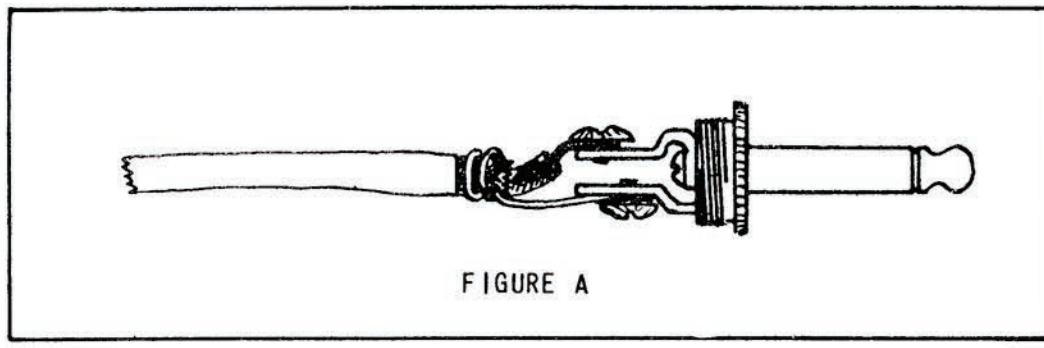

FIGURE A

OPERATION OF INSTRUMENTS

When either one or two instruments are plugged into the sockets marked INSTRUMENTS, three stages of amplification are used, the total gain being controlled by the volume control marked INSTRUMENTS.

The socket marked MICROPHONE may also be used with any of the GIBSON electrical instruments. When used this way a careful setting of the volume control marked MICROPHONE must be made to avoid overload and consequent distortion. This adjustment can be easily made by turning the volume control on the guitar or other instrument all the way on and setting the MICROPHONE control at the point where no distortion occurs when the strings are struck with maximum force. By utilizing the MICROPHONE socket in this way a third instrument can be plugged in, making a total of three electrical instruments which may be used and blended.

OPERATION OF THE MICROPHONE

Because of the high power output, high gain and high fidelity characteristics of the GIBSON BR-1 amplifier it makes an exceptionally fine public address system when used with either the crystal, dynamic or velocity types of microphones.

While the amplifier will operate very well with any of the crystal, medium or high impedance dynamic or velocity (ribbon) microphones, it is recommended that, before investing in a microphone, you consult your GIBSON dealer. Authorized GIBSON dealers can supply you with a microphone which has been selected and matched to the amplifier, thus insuring the most faithful reproduction of voice and music. These microphones are equipped with 25 foot shielded cords and are fitted with the same high grade shielded plug that is supplied with all GIBSON instruments.

If it is desired to use microphones of other make it is important that the GIBSON 75A or similar shielded plug be attached to the cord. The ordinary phone plug with bakelite or other non-shielded cover is not suitable because the leads from the microphone must be completely shielded. Otherwise objectionable hum will result. Figure A illustrates the proper way to connect the plug to the microphone cable.

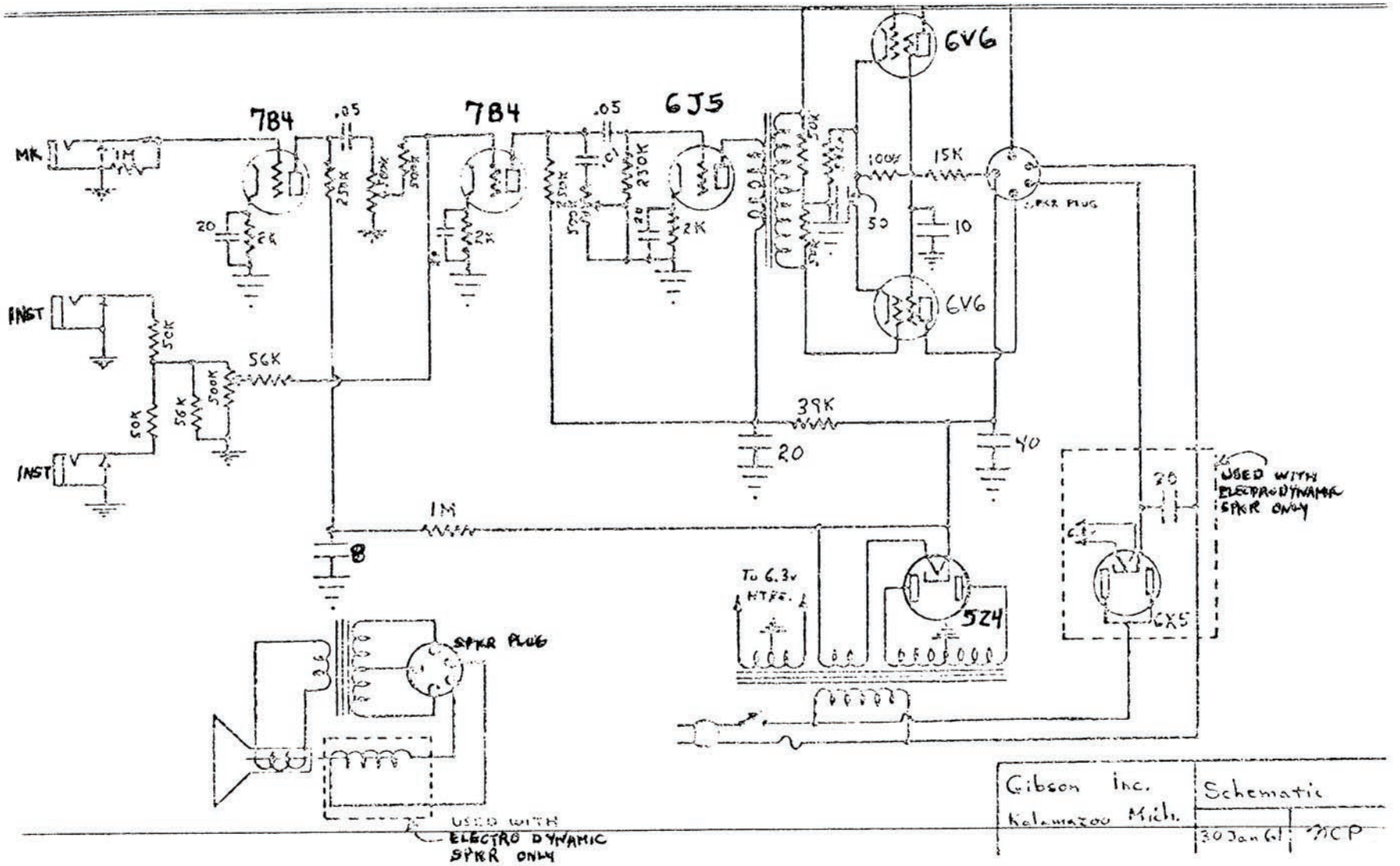

MK
1M
7B4
.05
250K
500K
500K
20
2K
7B4
.05
6J5
.01
230K
2K
50K
100K
15K
50
10
6V6
6V6
SPKR PLUG
INST
50K
56K
500K
50K
56K
INST
39K
20
40
1M
8
To 6.3v HTRS.
5Z4
20
USED WITH ELECTRODYNAMIC SPKR ONLY
6X5
SPKR PLUG
USED WITH ELECTRO DYNAMIC SPKR ONLY
Gibson Inc.
Kalamazoo Mich.
Schematic
30 Jan 61
MCP

GIBSON

MODEL BR-4 AMPLIFIER

INSTRUCTIONS

GIBSON INC., KALAMAZOO, MICH.

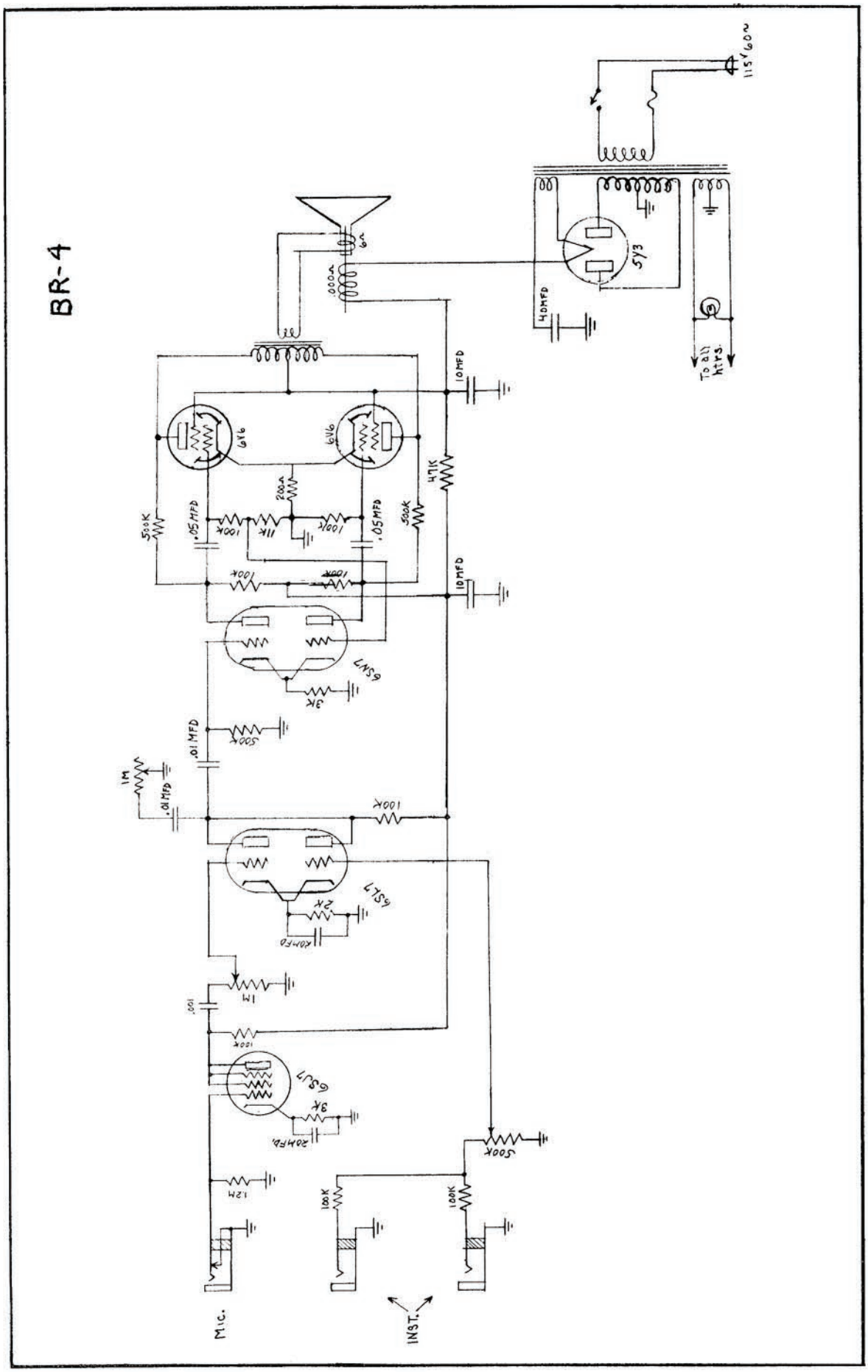
BR-4
115V 60~
5Y3
40MFD
To all htrs.
6V6
6V6
10MFD
10MFD
10MFD
.05MFD
.05MFD
.01MFD
.01MFD
.001
.001
100K
1K
200Ω
500K
500K
500K
100K
100K
100

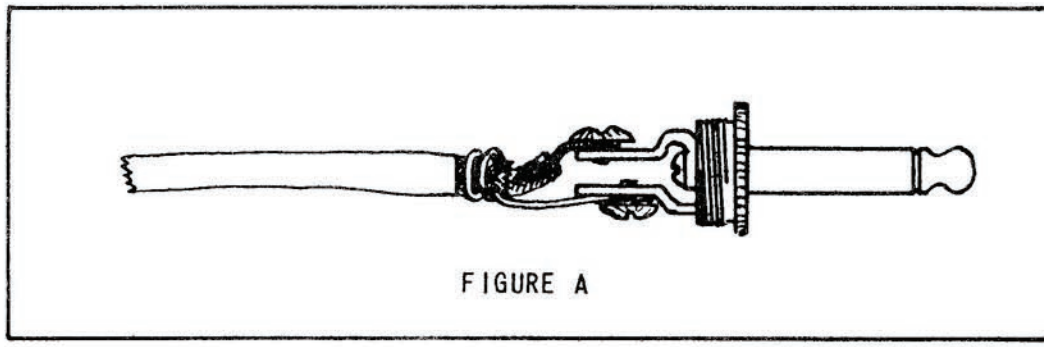

FIGURE A

OPERATION OF INSTRUMENTS

When either one or two instruments are plugged into the sockets marked INSTRUMENTS, three stages of amplification are used, the total gain being controlled by the volume control marked INSTRUMENTS.

The socket marked MICROPHONE may also be used with any of the GIBSON electrical instruments. When used this way a careful setting of the volume control marked MICROPHONE must be made to avoid overload and consequent distortion. This adjustment can be easily made by turning the volume control on the guitar or other instrument all the way on and setting the MICROPHONE control at the point where no distortion occurs when the strings are struck with maximum force. By utilizing the MICROPHONE socket in this way a third instrument can be plugged in, making a total of three electrical instruments which may be used and blended.

OPERATION OF THE MICROPHONE

Because of the high power output, high gain and high fidelity characteristics of the GIBSON BR-4 amplifier it makes an exceptionally fine public address system when used with either the crystal, dynamic or velocity types of microphones.

While the amplifier will operate very well with any of the crystal, medium or high impedance dynamic or velocity (ribbon) microphones, it is recommended that, before investing in a microphone, you consult your GIBSON dealer. Authorized GIBSON dealers can supply you with a microphone which has been selected and matched to the amplifier, thus insuring the most faithful reproduction of voice and music. These microphones are equipped with 25 foot shielded cords and are fitted with the same high grade shielded plug that is supplied with all GIBSON instruments.

If it is desired to use microphones of other make it is important that the GIBSON 75A or similar shielded plug be attached to the cord. The ordinary phone plug with bakelite or other non-shielded cover is not suitable because the leads from the microphone must be completely shielded. Otherwise objectionable hum will result. Figure A illustrates the proper way to connect the plug to the microphone cable.

To use the microphone, insert the plug in the MICROPHONE socket and advance the MICROPHONE volume control until a feedback squeal or howl is produced in the loudspeaker. Reduce the volume control to just below the feedback point. This setting will vary considerably depending upon the size of the room, its acoustical properties and the distance between the microphone and loudspeaker. Feedback is the limiting factor in all public address installations and is caused when the level of sound from the loudspeakers is sufficient to actuate the microphone. The general rule when setting up the equipment is to place the loudspeaker as far from the microphone as possible.

The volume controls INSTRUMENTS and MICROPHONE, being completely independent of each other, allow the inputs from the various sources to be "mixed" or blended. Because of this flexibility many unusual effects can be easily worked out.

If the MICROPHONE socket is not in use turn the MICROPHONE volume control all the way off.

GENERAL

Amplifiers are carefully packed to prevent damage in shipment. However, upon receipt of the amplifier, look it over carefully to make sure there has been no breakage of tubes or parts. If you find that damage has occurred during shipment, we suggest the Transportation Company be called immediately, and a claim placed.

CAUTION

Damage to the amplifier will result if it is connected to an improper power source. This amplifier is designed to be operated on 105-125 volt, 50-60 cycle alternating current only. Make sure the voltage from the power lines is not over 125, and that the frequency of the current is either 50 or 60 cycles. When ready to turn on power, plug the power cord into the electric outlet and turn on the switch. Wait approximately one minute for the tubes to heat, and the amplifier is ready for use.

TUBES

Be sure tubes are in their proper positions before placing the amplifier in operation. All tubes have been tested and proved satisfactory before shipment.

SERVICE

If the amplifier is in need of servicing, we suggest it be taken to a reliable radio man. The electrical diagram attached should be shown the repairman to assist him in servicing the amplifier.

* * *

The fuse used in the BR-4 amplifier is a type AG of three ampere rating. DO NOT USE FUSES OF HIGHER RATING.

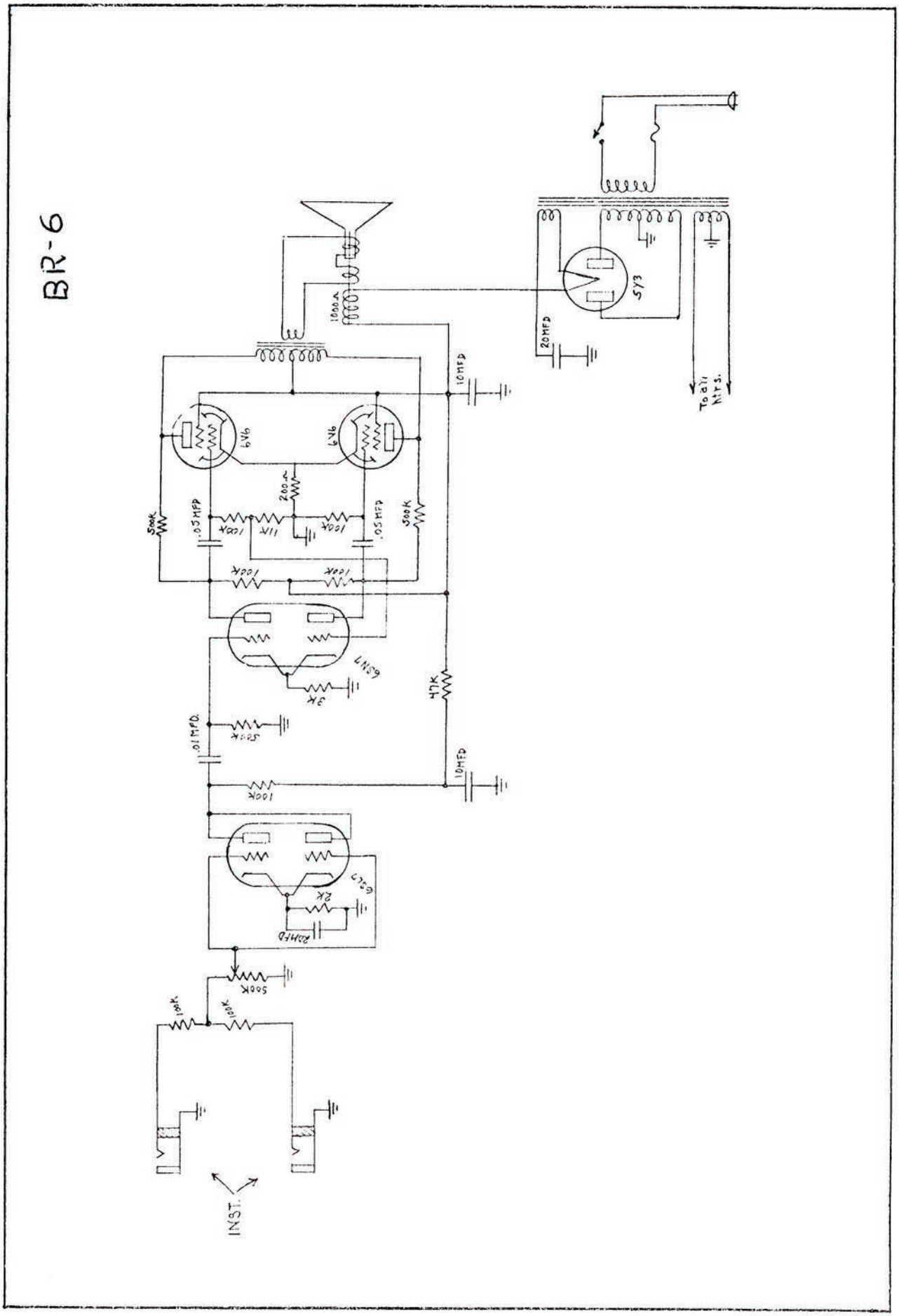
BR-6
5Y3
20MFD
To all htrs.
1000Ω
10MFD
6V6
6V6
200Ω
500K
.05MFD
100K
11K
100K
.05MFD
500K
100K
100K
6SN7
3K
47K
.01MFD.
500K
10MFD
100K
6SL7
2K
20MFD
500K
100K
100K
INST.

BR-6F

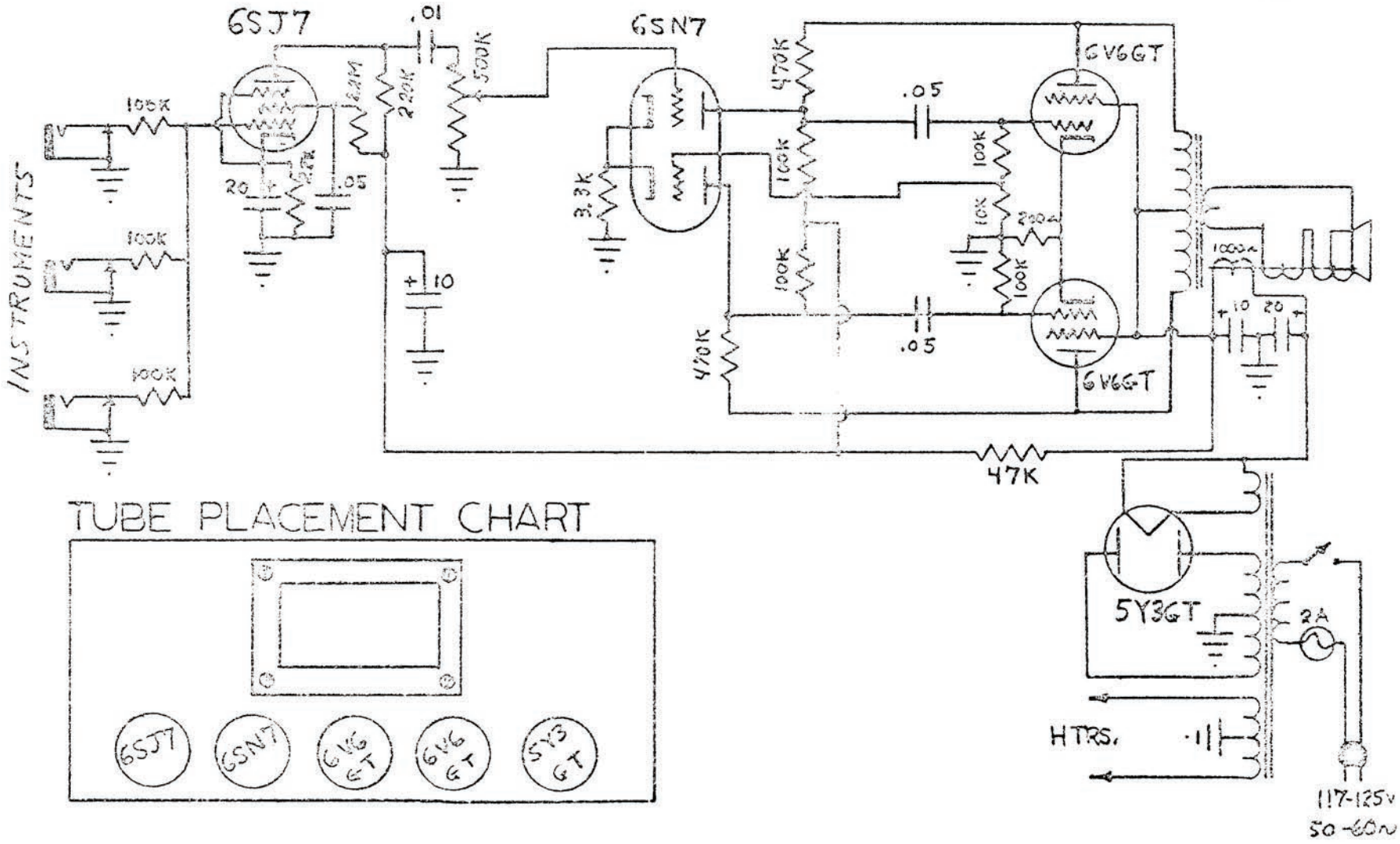

TUBE PLACEMENT CHART

GIBSON INC.	KALAMAZOO MICH.	DATE: 11 OCT 1960	DRAWN BY: MCP	CHECKED BY:

GIBSON

MODEL BR-9 AMPLIFIER

INSTRUCTIONS

GIBSON INC., KALAMAZOO, MICH.

BR-9

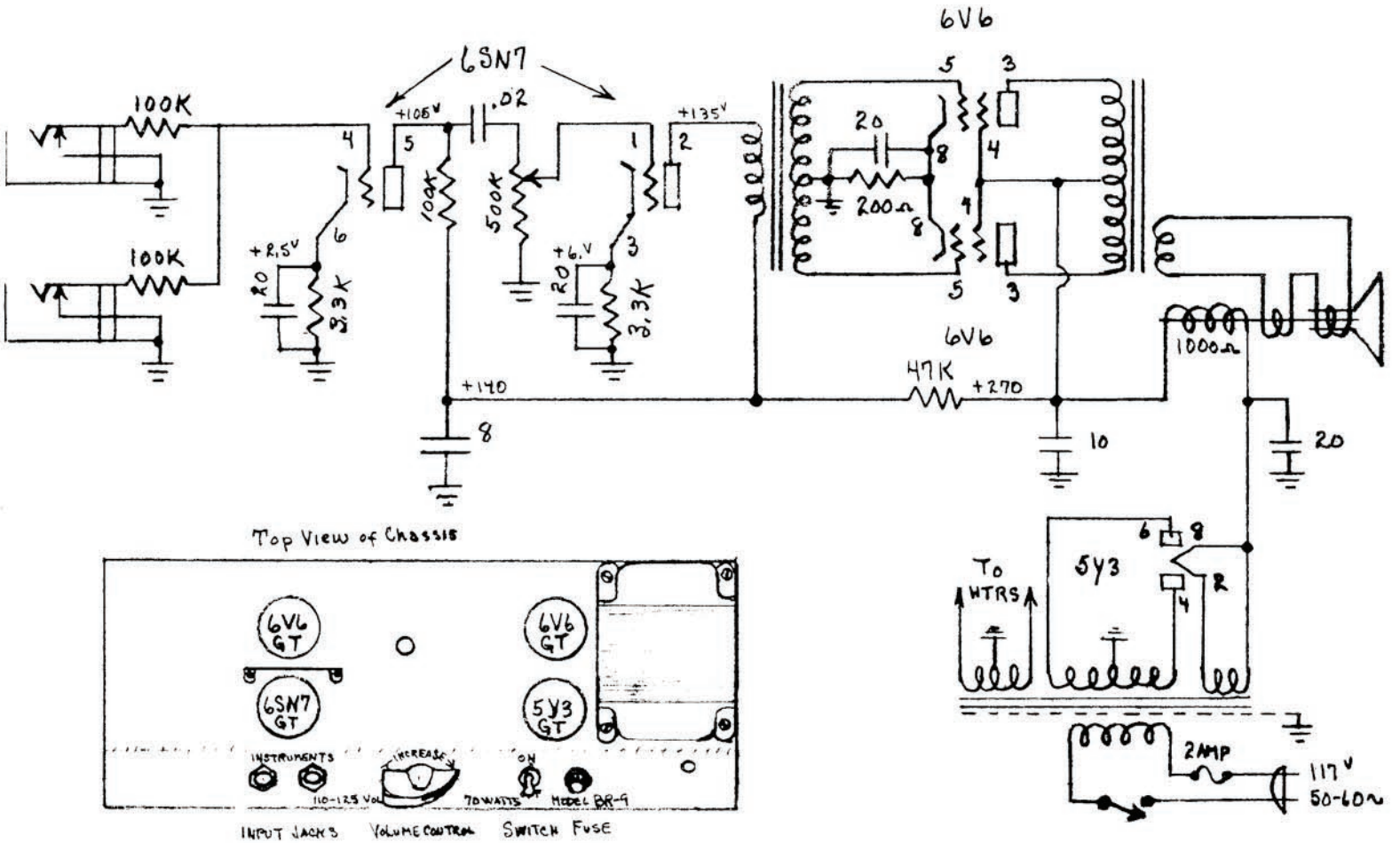
6V6
6SN7
100K
100K
+105V
.02
+135V
+2.5V
20
2.3K
10K
500K
+6.V
20
3.3K
+170
8
6V6
47K
+270
10
20
1000Ω
20
200Ω
8
Top View of Chassis
6V6 GT
6SN7 GT
6V6 GT
5Y3 GT
INSTRUMENTS
110-125 Volts
INCREASE
ON
70 WATTS
MODEL BR-9
INPUT JACKS
VOLUME CONTROL
SWITCH FUSE
To HTRS
5Y3
6
8
4
2
2AMP
117V
50-60~

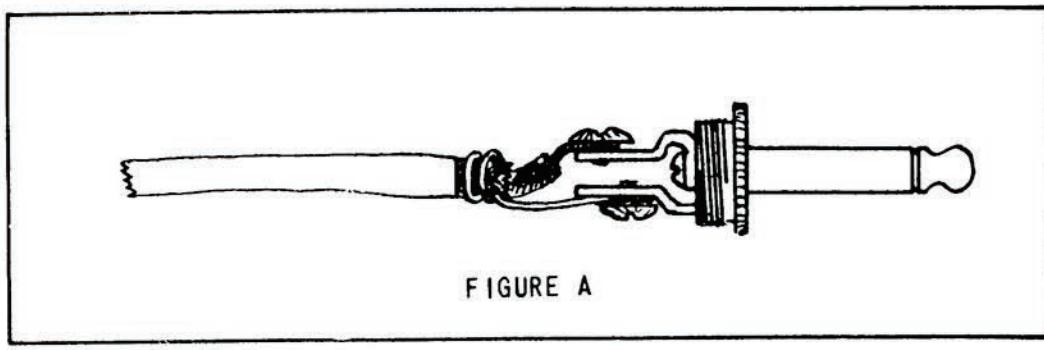

FIGURE A

OPERATION OF INSTRUMENTS

When either one or two instruments are plugged into the sockets marked INSTRUMENTS, three stages of amplification are used, the total gain being controlled by the volume control marked INSTRUMENTS.

GENERAL

Amplifiers are carefully packed to prevent damage in shipment. However, upon receipt of the amplifier, look it over carefully to make sure there has been no breakage of tubes or parts. If you find that damage has occurred during shipment, we suggest the Transportation Company be called immediately, and a claim placed.

CAUTION

Damage to the amplifier will result if it is connected to an improper power source. This amplifier is designed to be operated on 105-125 volt, 50-60 cycle alternating current only. Make sure the voltage from the power lines is not over 125, and that the frequency of the current is either 50 or 60 cycles. When ready to turn on power, plug the power cord into the electric outlet and turn on the switch. Wait approximately one minute for the tubes to heat, and the amplifier is ready for use.

TUBES

Be sure tubes are in their proper positions before placing the amplifier in operation. All tubes have been tested and proved satisfactory before shipment.

SERVICE

If the amplifier is in need of servicing, we suggest it be taken to a reliable radio man. The electrical diagram attached should be shown the repairman to assist him in servicing the amplifier.

* * *

The fuse used in the BR-9 amplifier is a type AG of two ampere rating. DO NOT USE FUSES OF HIGHER RATING.



Service Information

GIBSON INC., KALAMAZOO, MICH.

C L A V I O L I N E

SERVICE INFORMATION

THE CONSOLE:

The Clavioline Console contains four tubes and associated circuits, the functions of which are controlled by the keys and stops.

In the block diagram, Figure I, V1 is the Vibrato generator; V2 the Buffer, V3 the Tone generator and V4 the Output Amplifier and Percussion injector.

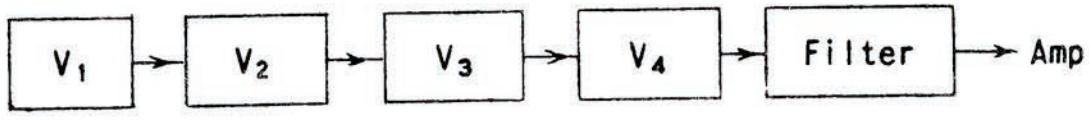

FIGURE 1

TONE GENERATOR:

V3, a double-triode, is connected in an RC oscillator circuit, the frequency of which is modified by the alteration in value of one of the resistance circuits. The resistance value is selected by the key depressed. A blocking bias of approximately -35 is applied to the grid 2 of V3 via the keyboard resistors. Depression of any key removes the bias and V3 oscillates. The 36 frequency control resistors are made to close tolerance and factory selected. They should not, therefore, be disturbed.

OCTAVE SWITCH:

With the "Octave Switch" set to the Bass (low) position, maximum capacity is connected into the tone generator circuit V3. Operation of the switch to the Alto (mid) and Treble (high) positions results in a progressive decrease of capacity.

OUTPUT AND PERCUSSION:

The signal from the Tone generator V3 is applied to the grid of the Output V4 a 6J7 tube. The cathode circuit is composed of an R. C. network which imposes a time delay in its operation. A positive potential, derived through a high resistance from the high voltage supply, is applied to the cathode and prevents the tube operating. Depression of any key completes the cathode circuit; the blocking bias becomes ineffective, and the tube operates.

The key contacts are so arranged that the Tone generator V3 comes into operation slightly before V4. A switch, controlled by the Stop marked P shorts out part of the cathode delay network, thus enabling a Percussion effect to be obtained.

The output from V4 is applied to the output socket via a filter network composed of inductance, resistance and capacity. The waveform generated is modified by switching in various combinations of these values, this switching forming the stops which are marked "1 to 9, 0, A, B and V". Across the output is also connected VC3 which operates as the "knee swell".

MASTER VOLUME CONTROL:

The master volume control VC7 is located on the right side and near the rear of the clavioline console. (The small red knob.) It is used to set the volume as desired for use in small rooms or for practicing. This allows the full use of the expression lever while restricting the overall volume.

VIBRATO:

V1, a 6SN7 tube operates as a very low frequency R.C. oscillator. The frequency is controlled in three steps by alteration in value of the resistance arms. This action is controlled by the three stops marked "VIBRATO I, II, III".

BUFFER:

The vibrato oscillator output is applied to the grid of a 6J5 tube V2, the cathode circuit of which is common to the cathode circuit of V3, the Tone generator. Thus, the frequency generated by V1 is caused to vary the frequency generated by V3 about its mean value. Closure of the "Amplitude" contacts shorts part of the potential divider R10 and R11 in the grid circuit of the V2 which results in an increased vibrato effect.

VIBRATO ADJUSTMENT:

The amplitude of the vibrato effect may be varied by adjusting the potentiometer VC4, (This is the small black knob located on the left side and near the rear of the console). After making a change in vibrato adjustment, recheck the tuning of VC5 and VC6 as the vibrato adjustment may affect the frequency of the oscillator V3 slightly.

SPECIAL TUNING:

Should it be found that the normal tuning knob adjustments for the three octaves of the keyboard do not coincide or that it is impossible to hold the instrument in tune with the piano over the complete range in this manner, it will be necessary to resort to the following special tuning adjustments:

SPECIAL TUNING INSTRUCTIONS:

The following tuning instructions should be disregarded unless the "CLAVIOLINE" has been serviced, changing the tuning, or the piano with which it is being played is badly out of tune, or can't be held in tune at normal pitch.

STEP 1.

Remove the end cheeks of the "CLAVIOLINE" keyboard to expose the screw driver slot shaft ends of the tuning potentiometers VC 1 and VC 2, (refer to Diagram on page 4). Remove the bottom cover to expose the pre-set condensers C 13, C 16, C 18, and C 19. Set the Octave switch at the extreme right, i.e. highest range.

STEP 2.

Set the tuning potentiometer VC 5 and VC 6 to the midway or center position. Play "A" 440 on the Piano and with the lowest "A" on the "CLAVIOLINE" depressed, bring the instrument into tune with the Piano by the adjustment of the left hand potentiometer VC 1. Depress the highest "A" on the "CLAVIOLINE" keyboard and at the same time adjust the right hand potentiometer VC 2 to the corresponding "A" of the Piano. Recheck the setting of VC 1, recheck the setting of VC 2 as the setting of one affects the setting of the other.

STEP 3.

Set Octave switch to the middle position. Depress the lowest "A" on the "CLAVIOLINE" keyboard and adjust the pre-set condenser C 16 so that the lower "A" is in tune with the corresponding "A" of the piano. Next depress the highest "A" of the "CLAVIOLINE" keyboard and adjust pre-set condenser C 19 so that the highest "A" is in tune with the corresponding "A" of the piano. Re-check the setting of C 16. Re-check the setting of C 19.

STEP 4.

Set Octave switch in the left hand or low position, depress the lowest "A" on the "CLAVIOLINE" keyboard and adjust the pre-set condenser C 13 so that the low "A" is in tune with the corresponding "A" of the piano. Next depress the highest "A" on the "CLAVIOLINE" keyboard and adjust the pre-set condenser C 18 until the high "A" is in tune with the corresponding "A" of the piano. Re-check the setting of C 13, re-check C 18.

This completes the special tuning of the "CLAVIOLINE".

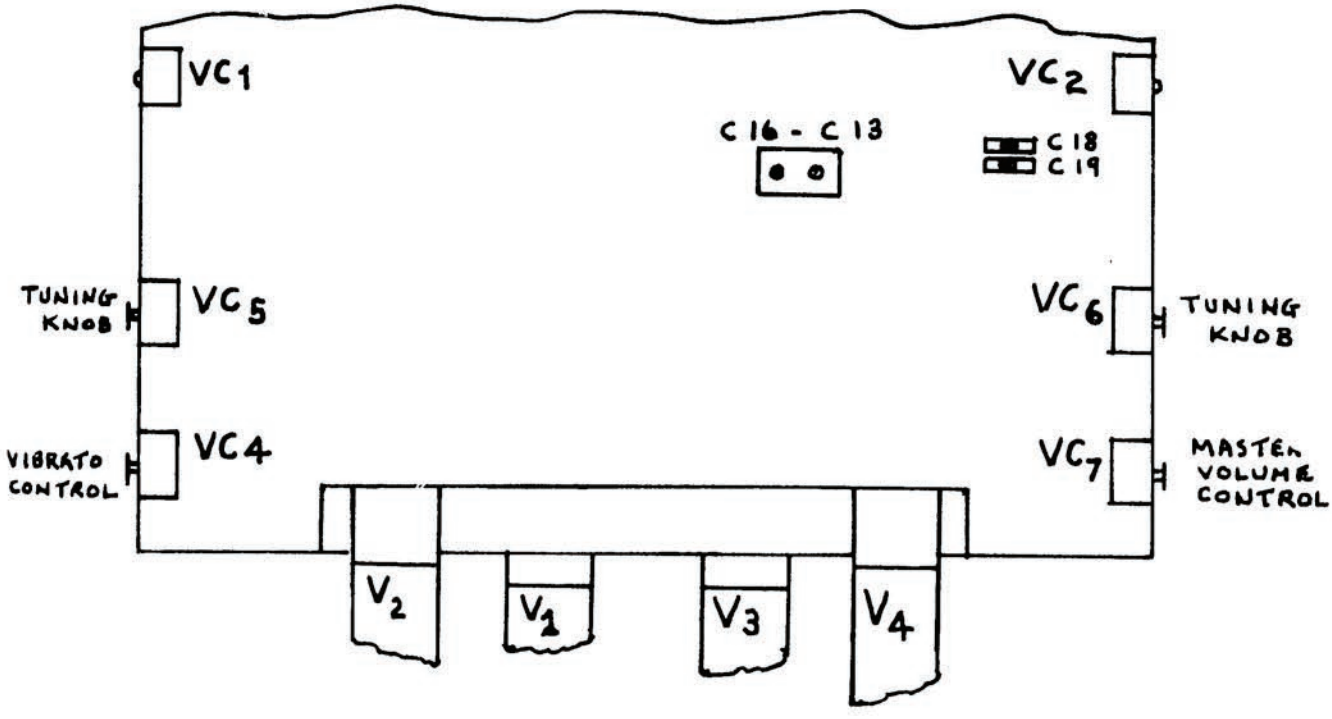

DIAGRAM FOR SPECIAL TUNING INSTRUCTIONS

GENERAL CLAVIOLINE SERVICE SUGGESTIONS

The materials and parts used in the Gibson "CLAVIOLINE" are of the finest quality obtainable. Many checks and inspections are made to assure the quality of these components. However under certain conditions minor servicing may be necessary. Information listed below will be of help in this servicing.

NOISY KEY CONTACT - NO SOUND FROM SINGLE KEY - SINGLE KEY FAILS TO PLAY.

This is probably caused by foreign material between key contacts, and can normally be dislodged by rapidly pressing the key several times. If this fails to correct the fault, remove the retaining strip which holds the key that is giving trouble. (Remove only the strip holding defective key, there are three of these strips.) This is done by removing the three nickle plated screws holding the retaining strip to the back of the keyboard.

Lift off the keys and examine the key contacts. Clean with a good grade liquid Electrical Contact Cleaner. Apply a very fine film of Electrical Contact Lubricant, then re-assemble.

HUM:

Due to the use of inductances in the tone shaping circuit of the "CLAVIOLINE" a small amount of hum may be present when using certain stops if the Amplifier is in close proximity to the keyboard. This can be eliminated by placing the Amplifier to one side and then lifting the Amplifier by the case handle and slowly rotating it until the hum disappears. This will be at approximately a 45 degree angle with respect to the keyboard.

SUDDEN SHIFT IN TUNING:

Probable cause, defective 6SN7 tube in the V3 position. Remove bottom cover and lightly tap this 6SN7 tube while depressing one of the keys. If frequency changes under these conditions, replace the 6SN7 with a tested and approved tube that may be purchased from your local Gibson dealer.

NOISY EXPRESSION CONTROL:

For servicing this control remove the bottom panel from the Console. The expression placquet is attached to a small rectangular wood block in the lower left hand corner of the chassis. Remove the tension on the four small contact springs by turning the tension nut in an anti-clockwise direction. Wipe the carbon deposited strip free of all foreign matter, wash with good grade of Electrical Contact Cleaner. Wipe dry with soft cloth. Be careful not to scratch the surface as this will permanently damage the control. A very fine film of electrical contact lubricant may be applied to the surface of the carbon strip. Adjust the tension as lightly as possible to keep from wearing through the surface of the strip. Make sure the plaquette is lined up so that the contacts of the expression lever do not leave the carbon deposit until the volume is all the way on.

CLAVIOLINE CONSOLE VOLTAGE ANALYSIS

All measurements taken with conventional Vacuum Tube Volt Meter.

A. C. Line Voltage, 117 volts, 60 cycles.

	V 1	V 2	V 3	V 4
Cathode #1	7 to 9	9	80	80/28*
Cathode #2	7 to 9		0	
Plate #1	150	150	110	150/130*
Plate #2	145		80	
Screen				140/85*

Above measurements taken under static conditions.
Those measurements marked * are taken with highest key depressed.

TUBE REPLACEMENT:

The V-3 tube (6SN7) is the Tone generator tube and is pretested and selected very carefully. To insure proper operation of the Clavioline, a replacement of this tube should be obtained through your Clavioline dealer, who can procure tested tubes from Gibson, Inc.

AMPLIFIER:

The amplifier consists of five tubes, V5 a 6J5 triode, followed by V6 and V7, two 6V6's in parallel. V8 a 5Y3 rectifier and an 0A2 voltage regulator. The amplifier follows common practice and only differs by virtue of the fact that it introduces distortion deliberately, and should not be altered. All the power for the keyboard is derived from the amplifier power supply and the 35 to 40 volts of blocking bias is obtained from the voltage drop across the smoothing choke which is in the negative lead of the high voltage supply circuit.

CLAVIOLINE AMPLIFIER VOLTAGE ANALYSIS

	V 5	V 6	V 7	V8
Cathode	5.5	22	22	
Plate	120	280	280	330/330AC
Screen		300	300	

Bias voltage (Across smoothing choke) -35 to -40 volts.

All measurements are taken between check point and chassis and are average figures only. Variations will occur.

FOR ALL CLAVIOLINE SERVICE NEEDS,

CONSULT YOUR LOCAL DEALER

CLAVIOLINE*

*Trade Mark of Gibson, Inc., Kalamazoo, Michigan

Clavioline Licensed Under Constant Martin Patent No. 2,563,477.

KEYBOARD RESISTORS .5% TOLERANCE

R32	6,300	R39	9,430	R46	14,148	R53	21,200	R60	31,720
R33	6,670	R40	10,000	R47	14,980	R54	22,456	R61	33,316
R34	7,074	R41	10,600	R48	15,860	R55	23,776	R62	35,600
R35	7,490	R42	11,228	R49	16,808	R56	25,200	R63	37,720
R36	7,930	R43	11,888	R50	17,800	R57	26,680	R64	40,000
R37	8,404	R44	12,600	R51	18,860	R58	28,296	R65	42,400
R38	8,900	R45	13,340	R52	20,000	R59	29,960	R66	44,912

VALUES ARE IN OHMS.

C1	.03	MFD.
C2	.03	MFD.
C3	.25	MFD.
C4	75	MMF.
C5	.1	MFD.
C6	.1	MFD.
C7	.25	MFD.
C8	.05	MFD.
C9	.02	MFD.
C10	2300	MMF.
C11		
C12	4400	MMF.
C13	300	MMF.
C14		
C15	2100	MMF.
C16	300	MMF.
C17		
C18	750	MMF.
C19	250	MMF.
C20	.02	MFD.
C21	.005	MFD.
C22	.005	MFD.
C23	.015	MFD.
C24	.01	MFD.
C25	.05	MFD.
C26	200	MMF.
C27	.005	MFD.
C28	.015	MFD.
C29	.02	MFD.
C30	100	MMF.
C31	1	MFD.
C32	.001	MFD.
C33	.05	MFD.
V1	6SN7GT	
V2	6J5	
V3	6SN7GT	
V4	6J7	

CLAVIOLINE KEYBOARD SCHEMATIC

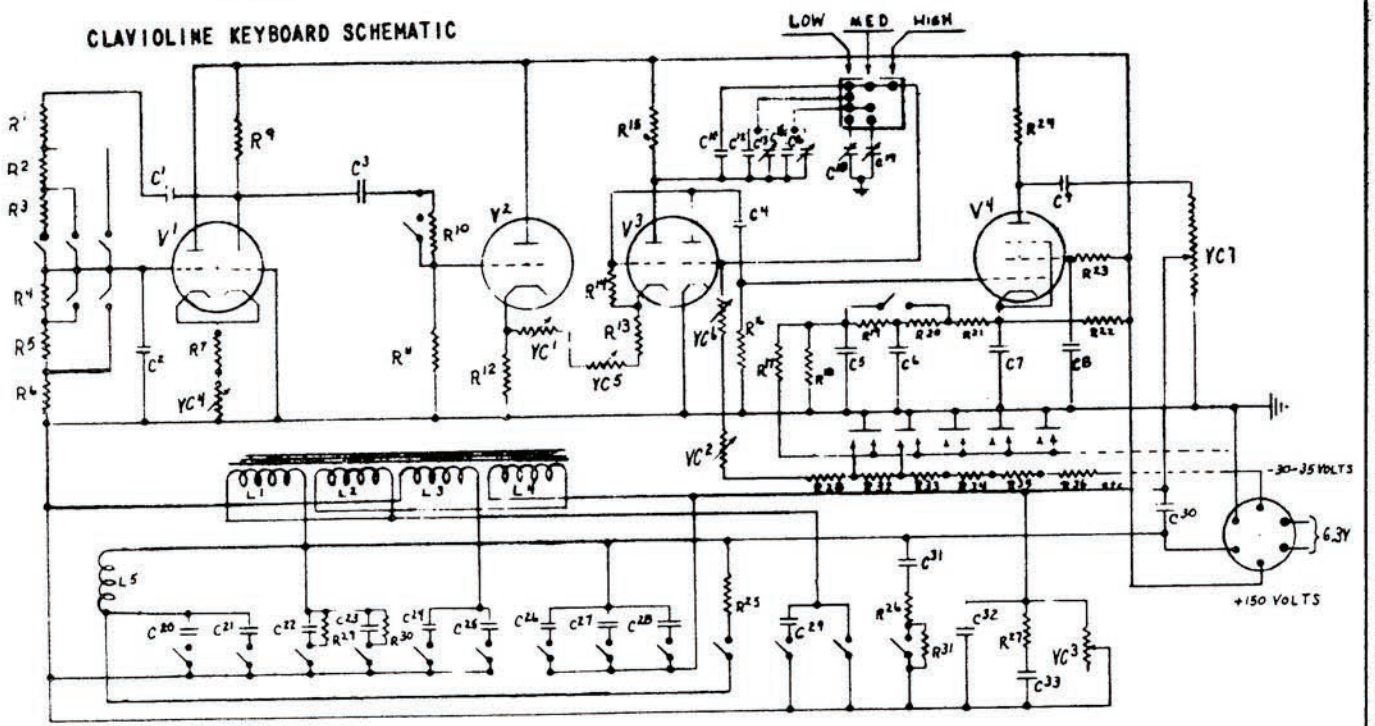

R1	750K
R2	120K
R3	200K
R4	200K
R5	120K
R6	750K
R7	5.1K
R8	
R9	22K
R10	1.5 Megohm
R11	510K
R12	3.9K
R13	25K
R14	8.5K
R15	20K
R16	2.2 Megohm
R17	1K
R18	510K
R19	51K
R20	2.4K
R21	5.1K
R22	510K
R23	1. Megohm
R24	56K
R25	10K
R26	5.1K
R27	20K
R28	60-62K
R29	240K
R30	120K
R31	3 Megohm
L1-4	Tone Choke
L5	" "
VC1	10K Pot. W.W.
VC2	10K " "
VC3	Special
VC4	5K Pot.
VC5	5K Pot. W.W.
VC6	10K " "
VC7	250K Pot.

Clavioline Licensed under
Constant Martin Patent No. 2,563,477

CLAVIOLINE AMPLIFIER SCHEMATIC

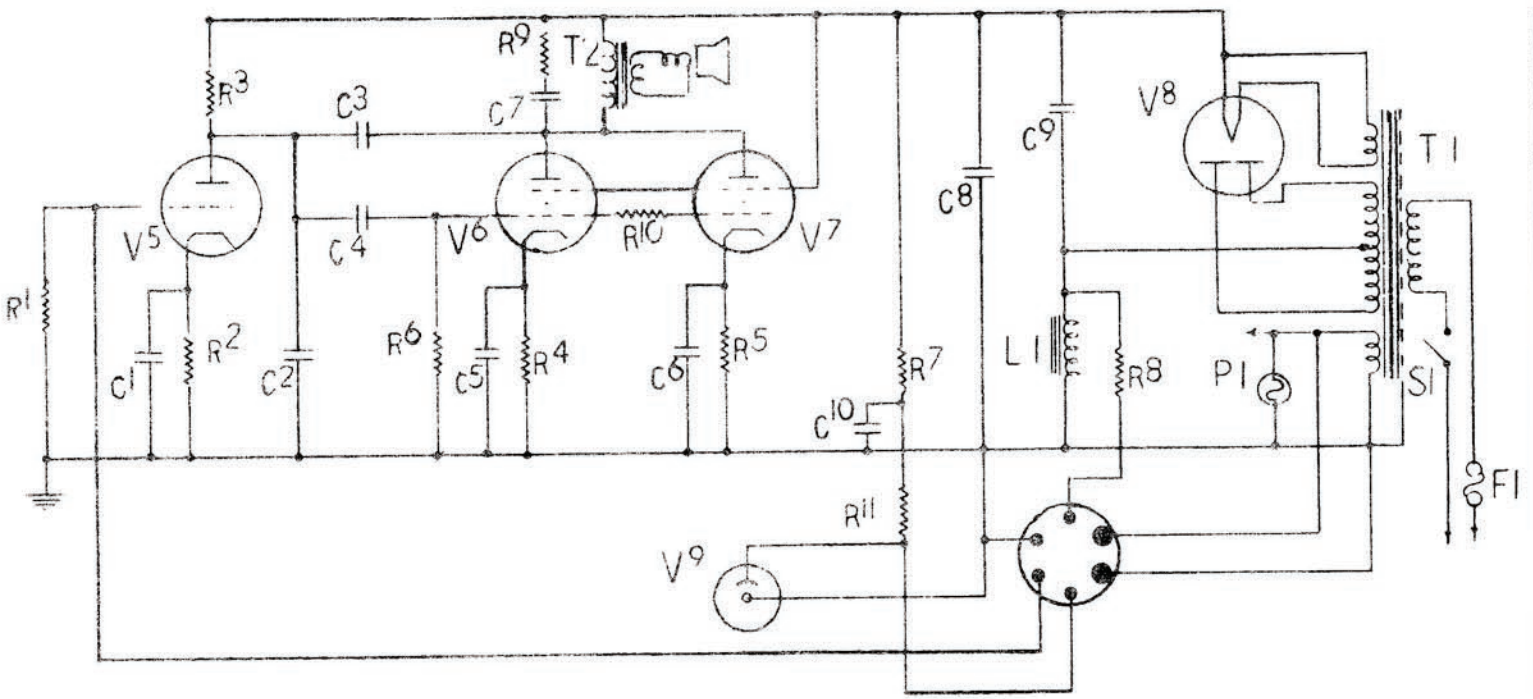

R^1	1. Megohm
R^2	8,200 Ohms
R^3	270K
R^4	620 Ohms
R^5	620 Ohms
R^6	470K
R^7	8,200 Ohms
R^8	2.2 Megohm
R^9	4,700 Ohms
R^{10}	1,000 Ohms
R^{11}	4,700 Ohms
C^1	20MFD. 25V
C^2	.002 MFD. 600V
C^3	50 MMF. 500V
C^4	.1 MFD. 400V
C^5	50MFD. 50V
C^6	50MFD. 50V
C^7	.003MFD. 600V
C^8	20MFD. 450V
C^9	20MFD. 450V
C^{10}	35MFD. 350V
T^1	GA-40-P
T^2	X-3740
L^1	GA-10-C
F^1	2 AMP. TYPE 3AG
P^1	#44 or #47
S^1	SPST SWITCH
V^5	6J5
V^6	6V6G/GT
V^7	6V6G/GT
V^8	5V3G/GT
V^9	0A2

Clavioline Licensed under
Constant Martin Patent No. 2,563,477

Maestro

STEREO-AMP.

INSTRUCTIONS

PRODUCT OF ELECTRONICS DIVISION, GIBSON INC., KALAMAZOO, MICH.

STEREO-AMP

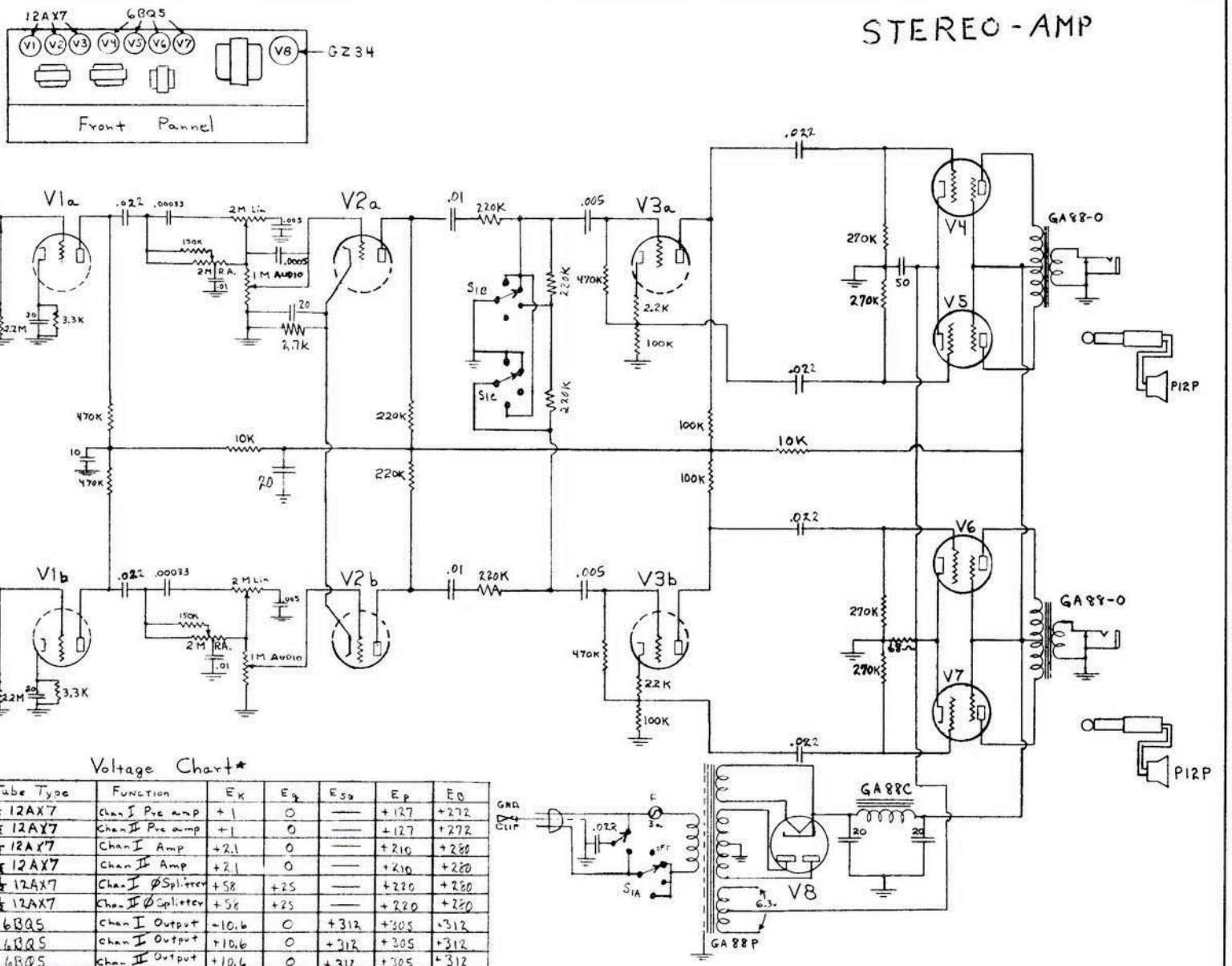

Voltage Chart*

Tube No.	Tube Type	Function	E_K	E_{g_2}	E_{s_b}	E_P	E_0
V1a	½ 12AX7	Chan I Pre amp	+1	0	——	+127	+272
V1b	½ 12AX7	Chan II Pre amp	+1	0	——	+127	+272
V2a	½ 12AX7	Chan I Amp	+2.1	0	——	+210	+280
V2b	½ 12AX7	Chan II Amp	+2.1	0	——	+210	+280
V3a	½ 12AX7	Chan I ØSplitter	+58	+25	——	+220	+280
V3b	½ 12AX7	Chan II ØSplitter	+58	+25	——	+220	+280
V4	6BQ5	Chan I Output	+10.6	0	+312	+305	+312
V5	6BQ5	Chan I Output	+10.6	0	+312	+305	+312
V6	6BQ5	Chan II Output	+10.6	0	+312	+305	+312
V7	6BQ5	Chan II Output	+10.6	0	+312	+305	+312
V8	GZ34	Rect.	+320	——	——	310 | 310	——

* VOLTGES TO CHASSIS WITH 20,000 ~/V METER

MAESTRO STEREO-AMP.

The Maestro "Stereo-Amp." is an amplifier with the newest electronic advances in true Stereo amplification and reproduction.

POWER OUTPUT

The Maestro Stereo-Amp. is a high fidelity amplifier capable of a normal output of 18 watts in each stereo channel, or 36 watts total.

OPERATING INSTRUCTIONS

To remove the inner speaker enclosure, push in the lower tab of the two case catches that are located along the side and near the top edge of the speaker grill. Place one hand near the center top of the outer enclosure, with the other hand gently lift the top edge of the inner enclosure and pull out of the larger enclosure.

Place the two speaker enclosures in their desired locations, try to keep as much separation as possible between speakers for best stereo effects. Remove the amplifier from the inner enclosure by turning the retaining brackets sideways and sliding the amplifier out. Place it near the playing position for convenience in changing control settings.

Uncoil the speaker cables from their respective holders and plug them into the speaker jacks located in the small well, located along the back and bottom edge of the metal amplifier cabinet. The A.C. line cord also enters the metal cabinet at this point.

FOR STEREO OPERATION

Place the function switch in stereo position. This switch also controls the off, on, standby function.

Maestro stereo guitars are furnished with a special two-conductor shielded cable with a "Y" junction. Place a plug from the "Y" connector in Channel 1, Jack 1; place the second plug from the "Y" connector in Channel 2, Jack 1; place the special two-conductor plug at opposite end of "Y" instrument cord in the instrument jack. Set all controls as desired. The volume from each speaker should be adjusted until the sound from each speaker appears equal to the player's ear. Tone control settings will affect the volume settings somewhat; therefore, the settings of Channel 1 and Channel 2 volume controls will not necessarily be numerically identical.

FOR MONAURAL OPERATION

Place the function switch in Monaural position. This places Channel 1 and Channel 2 output amplifiers in parallel. Plug in regular instrument with conventional manner and adjust only those controls that are associated with the channel in which the instrument is being used.

POLARITY SWITCH

This added convenience enables the player to quickly find the polarity of the power source which reduces the A.C. hum and other extraneous noises to a minimum.

ASSEMBLING CASE FOR CARRYING

Unplug speaker cables and coil up in their respective holders. Set amplifier in inner speaker enclosure, lock amplifier in place by moving retaining brackets to the front of the amplifier chassis. Coil up the A.C. line cord and place it in the receptacle at the right end of the case. Slide the inner enclosure into the outer enclosure. It will be necessary to lower the carrying handle of the inner enclosure. Line up the edges of the inner and outer cases and lock in position by pressing upper tab of the two case catches. The combined case can now be safely carried.

MICROPHONE OPERATION

The Maestro "Stereo-Amp." can be used as an excellent public address system. To use the microphone, place the function switch in the monaural position, insert the microphone plug in any of the four input jacks and advance the associated volume control until a feedback squeal or howl is produced by the loudspeaker. Reduce the volume control to just below the feedback point. This setting will vary considerably depending upon the size of the room, its acoustical properties and the distance between the microphone and the loudspeaker. Feedback is the limiting factor in all public address installations and is caused when the level of sound from the loudspeaker is sufficient to actuate the microphone. The general rule when setting up the equipment is to place the loudspeaker as far from the microphone as possible.

It is important that a shielded plug be attached to the microphone cable. The ordinary phone plug with bakelite or other non-shielded cover is not suitable because the leads from the microphone must be completely shielded. Objectional hum will result otherwise. Figure A illustrates the proper way to connect the plug to the microphone cable.



FIGURE A

GENERAL

Amplifiers are carefully packed to prevent damage in shipment. However, upon receipt of the Amplifier, examine carefully to determine if there has been breakage of tubes or parts. If damage has occurred during shipment, the Transportation Company should be notified immediately, and a claim placed.

CAUTION

Damage to the Amplifier will result if it is connected to an improper power source. This amplifier is designed to be operated on 105 - 125 volt, 50 - 60 cycle alternating current ONLY. Check the voltage from the power lines to determine that it is not over 125 volts, and the frequency of the current is either 50 or 60 cycles.

When ready to use power, plug the power cord into the electric outlet and move the switch to the Stereo or Monaural position. Approximately one minute is required for the tubes to heat before the Amplifier is ready to use.

TUBES

Check tubes for proper positioning before placing the Amplifier in operation. All tubes have been tested and proved satisfactory before shipment.

GROUND CLIP

The AC Line Cord is equipped with an external Ground Clip that can be attached to any grounded object such as a water pipe, steam radiator, or to a grounded circuit such as is used in recording and broadcasting studios, This reduces extraneous noises and hum — a feature very essential for top notch performance.

SERVICE

If the Amplifier is in need of servicing, consult a reliable radio man. The electrical diagram attached to the amplifier will assist the repair man in servicing.

FUSE

The fuse in the MAESTRO-STEREO Amplifier is a type 3AG Slo-Blo of three ampere rating. DO NOT USE A FUSE OF HIGHER RATING.

GA- CUSTOM

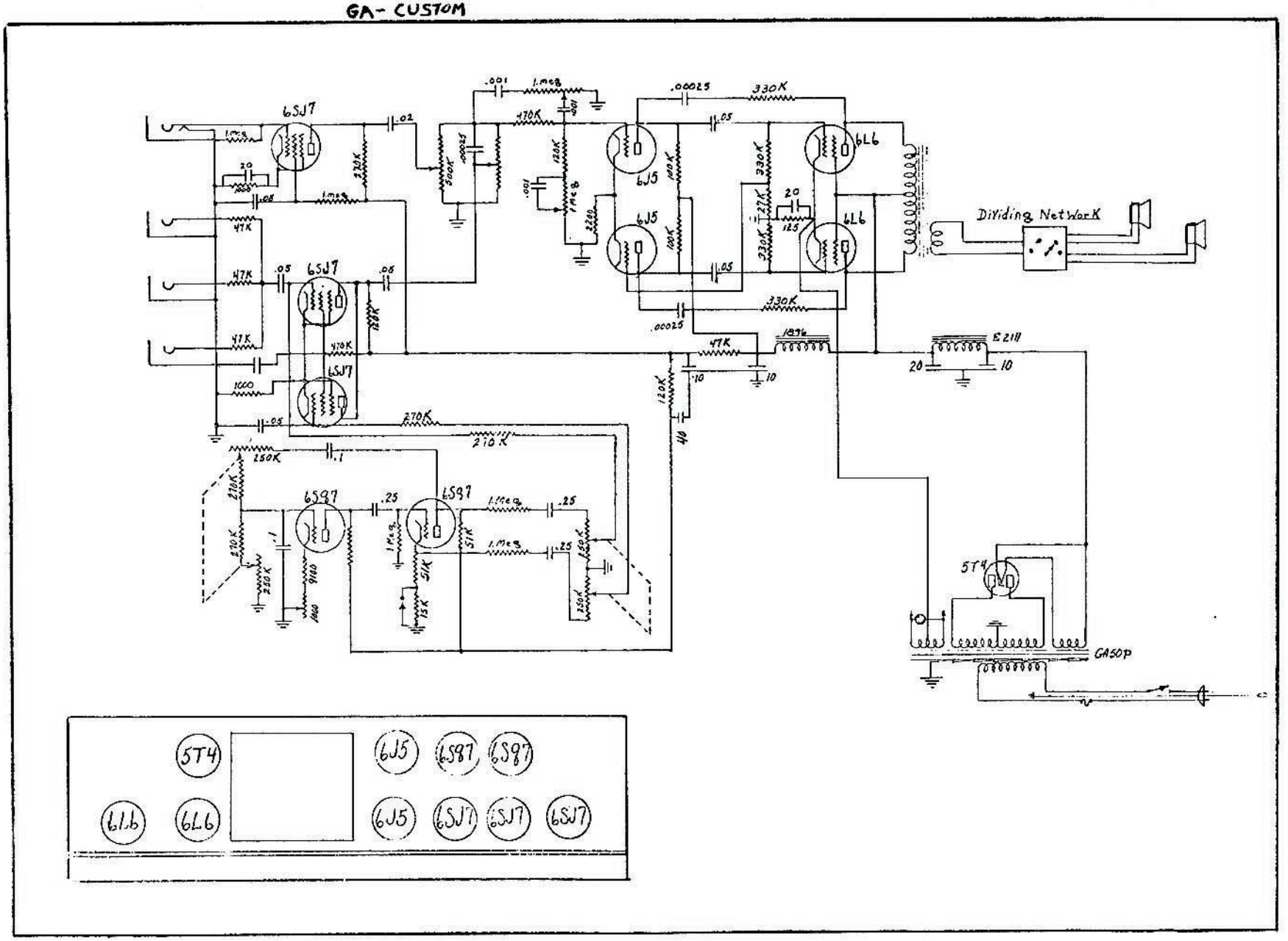
6SJ7
6SJ7
6SJ7
6SQ7
6SQ7
6J5
6J5
6L6
6L6
5T4
Dividing NetWorK
E 2111
GA50P
5T4
6J5
6SQ7
6SQ7
6L6
6L6
6J5
6SJ7
6SJ7
6SJ7

Maestro

REVERB. TREMOLO

INSTRUCTIONS

PRODUCT OF ELECTRONICS DIVISION, GIBSON INC., KALAMAZOO, MICH.

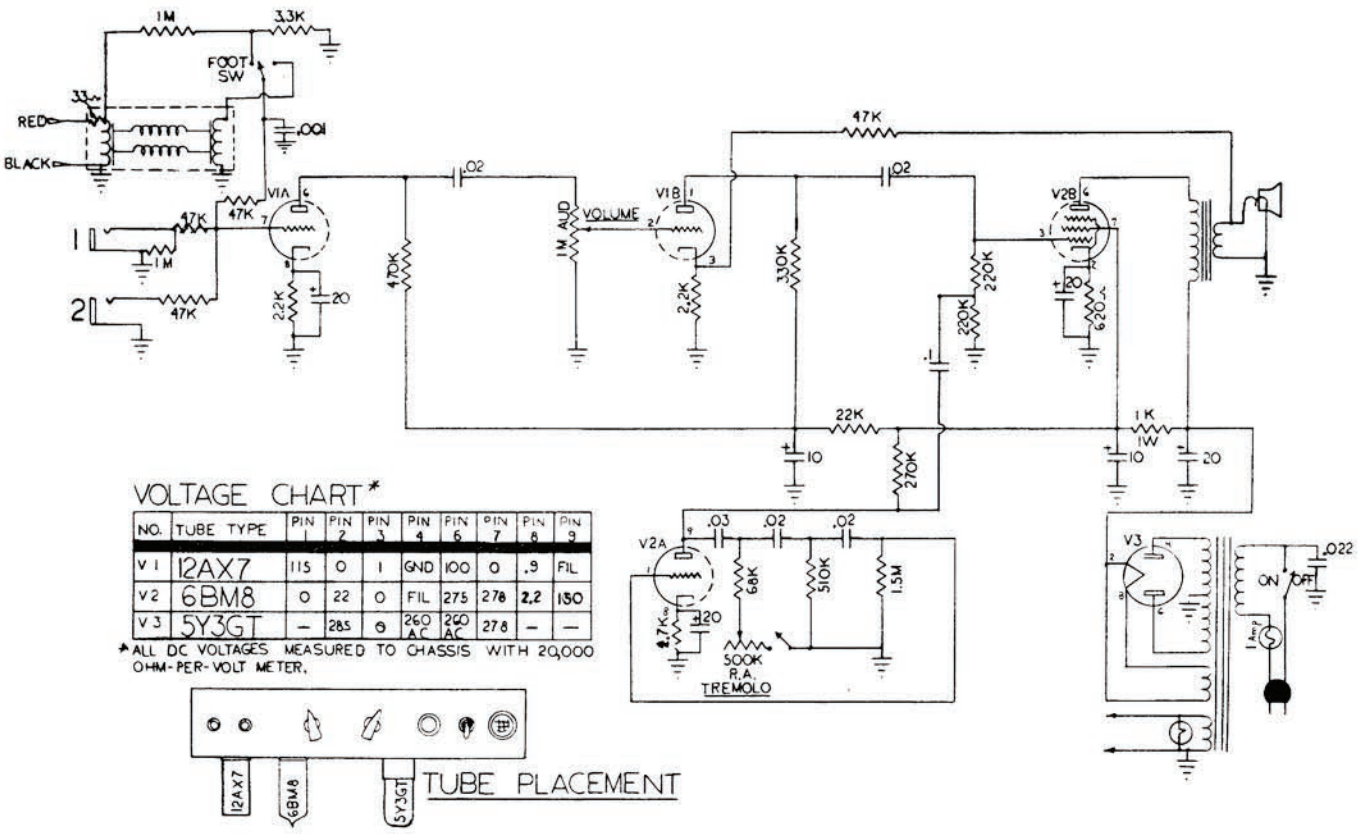

VOLTAGE CHART*

NO.	TUBE TYPE	PIN 1	PIN 2	PIN 3	PIN 4	PIN 6	PIN 7	PIN 8	PIN 9
V1	12AX7	115	0	1	GND	100	0	.9	FIL
V2	6BM8	0	22	0	FIL	275	278	2.2	150
V3	5Y3GT	—	285	0	260 AC	260 AC	278	—	—

*ALL DC VOLTAGES MEASURED TO CHASSIS WITH 20,000 OHM-PER-VOLT METER.

TUBE PLACEMENT

GIBSON

MODEL GAV-1 ELECTRONIC VIBRATO

INSTRUCTIONS

GIBSON INC., KALAMAZOO, MICHIGAN

4155—500—HPCo. 3439

GAV-1

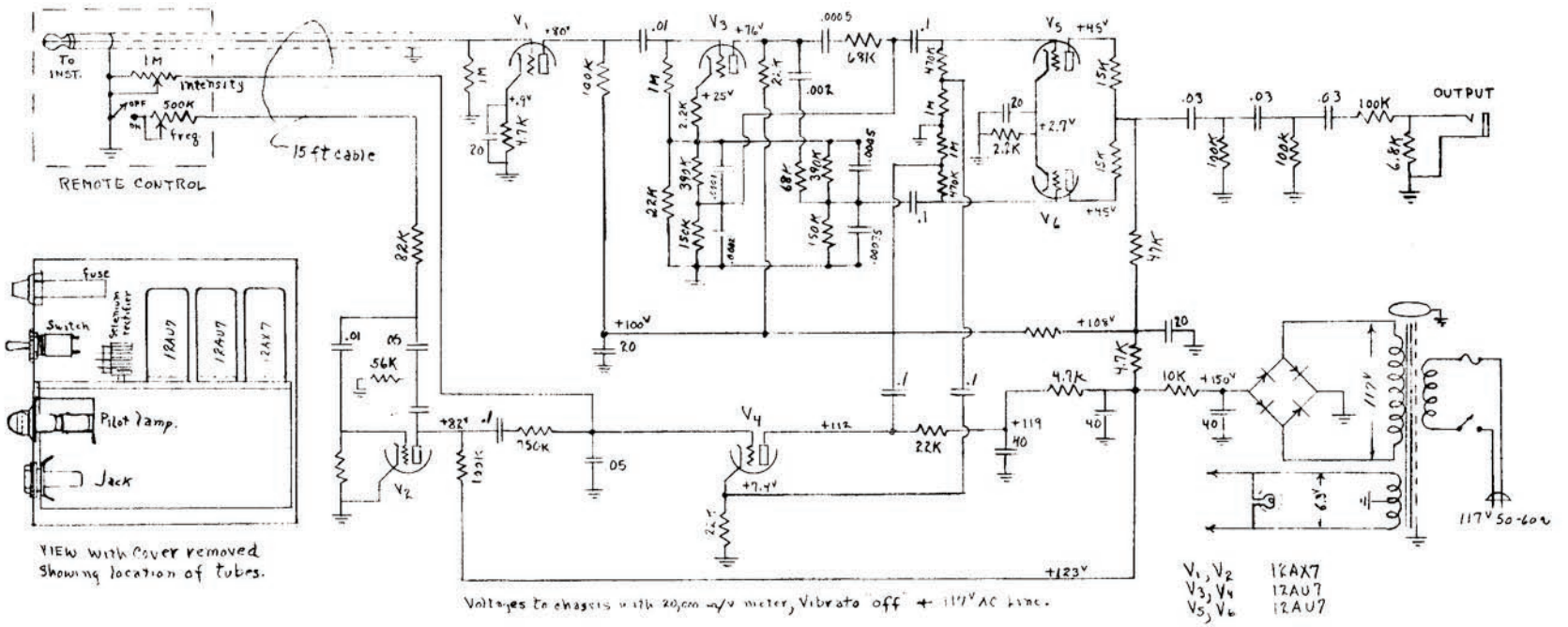

Voltages to chassis with 20,000 Ω/V meter, Vibrato off + 117V AC line.

V_1, V_2	12AX7
V_3, V_4	12AU7
V_5, V_6	12AU7

GIBSON ELECTRONIC VIBRATO — MODEL GAV-1

DESIGN

Engineered as a separate compact unit for use with the majority of amplifiers to produce, as needed, a true "Frequency Vibrato." With this Unit, new tonal effects can be added to any performance.

Acclaimed by users as the finest Vibrato ever designed. Vibrato can be switched on or off, and adjusted for frequency and intensity by the Remote Control Box which plugs into the instrument jack.

CONSTRUCTION

Compact Vibrato Box, 6" x 6" x 3" with rich Brown Crystalite finish. Complete with 10 feet of A.C. Line Cord and 15 feet of Cord with Remote Control Unit attached. Both Cords may be wound around the combination Carrying Handle and Cord Hanger when not in use.

OPERATION

1. Plug 10 ft. A.C. line Cord from box to any outlet of 105 - 125 volt, 50 - 60 cycle alternating current ONLY. Move toggle switch of Vibrato Box to "ON" position.
2. Plug Royalite Remote Control Box into instrument jack, adjusting the lip of Control Unit firmly against the top of the instrument. Set the Volume and Tone Controls of the instrument to the same settings that are normally used.
3. Plug one end of the regular instrument cord into Vibrato Box jack, and the other end of cord into instrument jack on amplifier. Set amplifier volume control to desired volume.
4. Set "Frequency" and "Intensity" Controls as desired. Vibrato effect may be switched on or off as desired with Push Button Switch included in Remote Control Unit. This Unit has adjustable instrument plug and will fit any GIBSON ELECTRIC and most other Electrics with a distance of 2-7/16" or less from center of instrument jack to top of instrument.

GENERAL

This Unit has been carefully inspected and securely packed to prevent damage in shipment. However, upon receipt, examine carefully to determine if breakage or hidden damage has occurred during shipment. If damage has occurred, the transportation company should be notified and a claim placed immediately.

CAUTION

Damage to this Unit will result if connected to an improper power source. This Unit is designed to operate on 105 - 125 volt, 50 - 60 cycle alternating current ONLY.

SERVICE

Please save these Instructions in case of service or repairs. It will help the Service Man in locating the trouble, and in replacing defective parts with correct values.

FUSES

This Unit is designed to use a Type 3AG, ½ ampere fuse. DO NOT USE FUSES OF HIGHER RATING.

Maestro

REVERB. TREMOLO
MODEL GA-1 RVT

INSTRUCTIONS

PRODUCT OF ELECTRONICS DIVISION, GIBSON INC., KALAMAZOO, MICH.

REVERB UNIT UNPACKING INSTRUCTIONS

IMPORTANT — READ CAREFULLY BEFORE USE

CAUTION

The Reverb Unit has been carefully constructed. It is, however, a delicate electronic device. Treat it with the same care and respect given a TV set.

Avoid dropping, sudden jolts, or rough handling and it will give excellent service. This beautifully musical Reverberation effect is not to be confused with the repeating signal produced by the mechanical tape recorder style of echo units.

UNPACKING

Amplifiers are carefully packed to prevent damage in shipment. However, upon receipt of the amplifier, examine carefully to determine if there has been breakage of tubes or parts. If damage has occurred during shipment, call the Transportation Company immediately, and place a claim.

TUBES

Make certain all tubes are seated firmly into their respective sockets. Each tube is labeled for proper replacement should any tube be out of its socket. Be especially careful when inserting tubes to see that the pins on the tube are correctly aligned with the holes in the socket before pushing into place. Do not twist tube — push tube straight into socket. It is advisable to check tubes from time to time depending on amount of use and excellence of performance. *Be sure tubes are always returned to proper sockets and seated firmly.*

REVERB POWER UNIT SET UP INSTRUCTIONS

CAUTION

Check the current rating of the power outlet to be used. *Be positive it is 110-120 volt, 50-60 cycle A. C. (alternating current) ONLY.* Never connect the Reverb Unit to a D. C. (direct current) outlet. Improper current type or rating can do serious damage.

SET UP

Set up the guitar and amplifier in the usual manner — see diagram below.

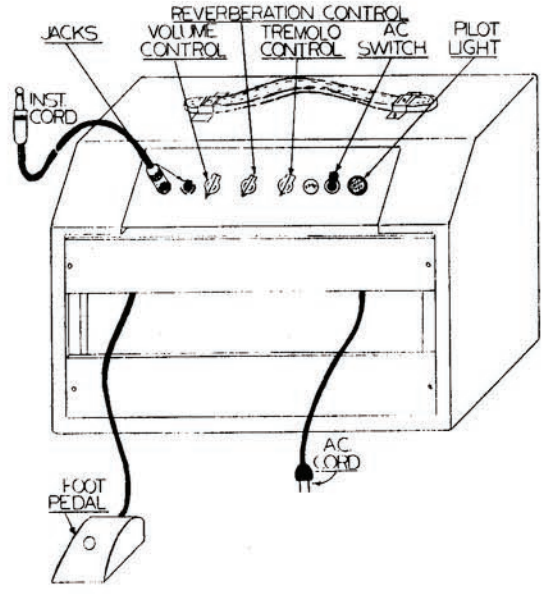

1. If only one instrument is used it should be plugged into the Number 1 Jack for maximum gain.
2. Place the foot control switch of the Reverberation Unit in a convenient position and the system is ready to operate. This foot switch turns the reverberation effect ON and OFF.
3. If tremolo is to be used with the music being played, it can be accomplished by turning Tremolo control clockwise from the OFF position. The frequency of the tremolo can be varied over a wide range of speeds by turning this control.
4. REVERBERATION:—Due to the unusual flexibility of the Reverberation circuit, it is important that the operator understands the various control settings to obtain the total range of Reverberation effects of which this amplifier is capable. Illustrated herein are several examples of control settings which will reproduce different Reverberation effects.

Volume Reverberation Tremolo

Example No. 1. 50% Main Signal - 50% Reverb.

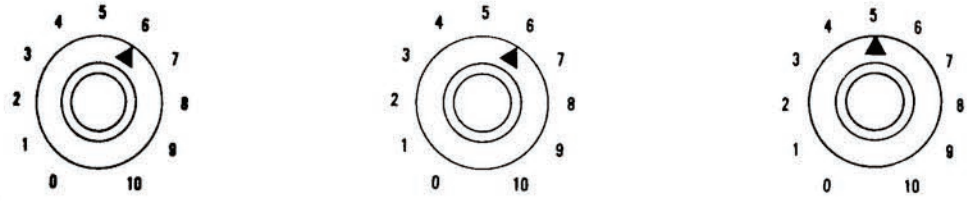

INSTRUMENT SETTINGS — Tone control and/or toggle switch in maximum treble position. Volume control setting 2½ to 3.

Example No. 2. 75% Main Signal - 25% Reverb.

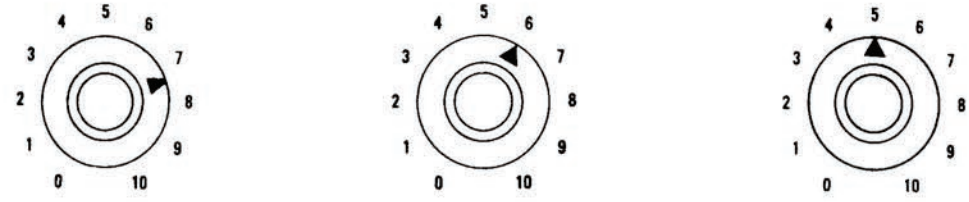

INSTRUMENT SETTINGS — Same as above

Example No. 3. 25% Main Signal - 75% Reverb.

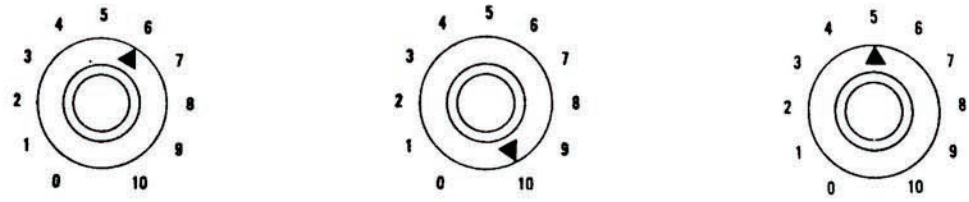

INSTRUMENT SETTINGS — Same as Example No. 2.

Example No. 4. 100% Reverb.

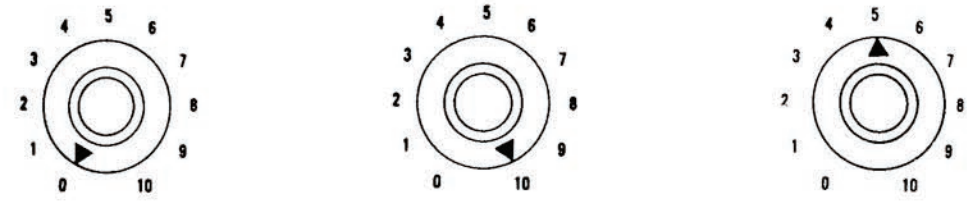

INSTRUMENT SETTINGS — Same as Example No. 2.

FOOT SWITCH MUST BE IN THE "ON" POSITION FOR REVERBERATION.

GA-1 RVT

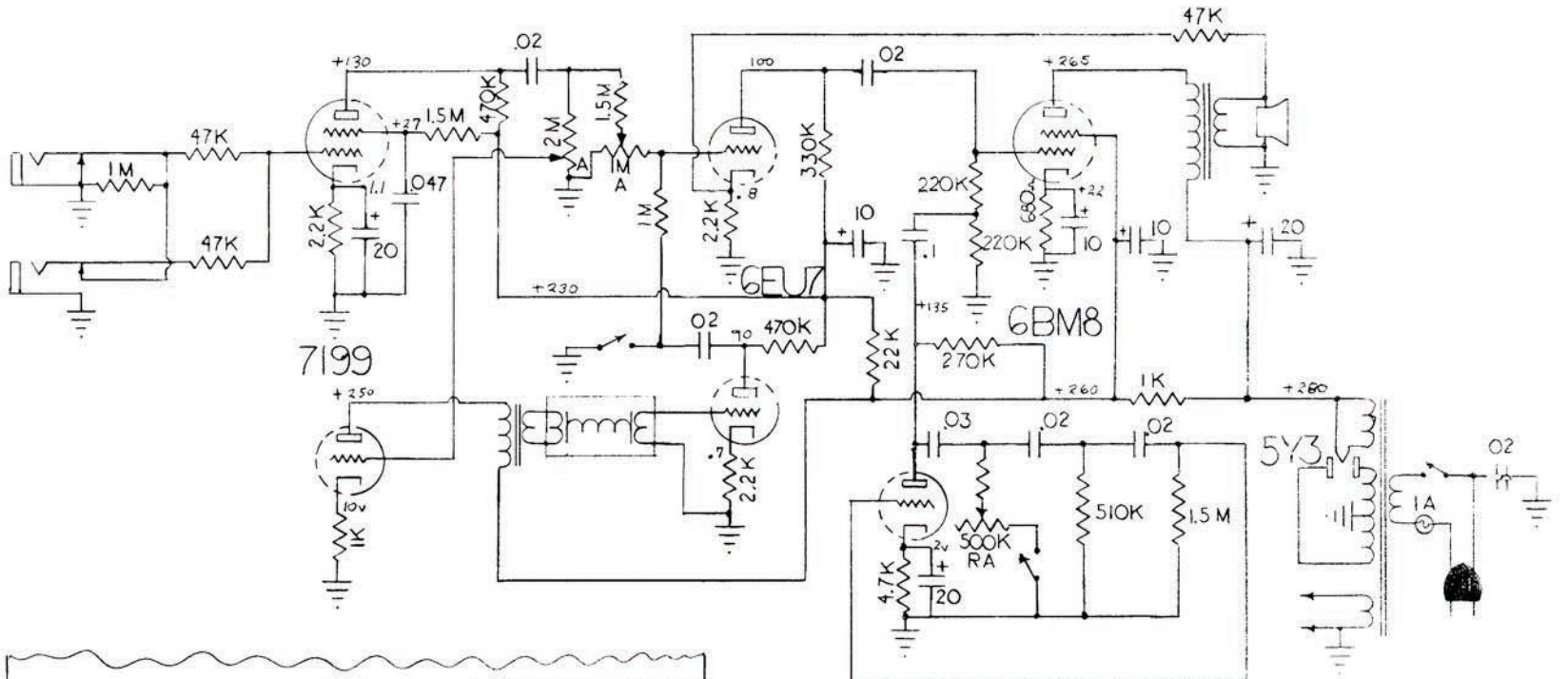

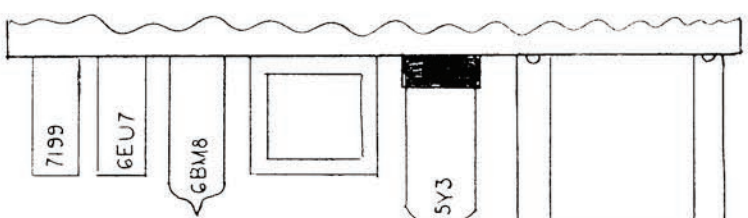

TUBE PLACEMENT CHART

Maestro Deluxe

REVERB. TREMOLO

GA2-RVT

INSTRUCTIONS

PRODUCT OF ELECTRONICS DIVISION, GIBSON INC., KALAMAZOO, MICH.

REVERB UNIT UNPACKING INSTRUCTIONS

IMPORTANT — READ CAREFULLY BEFORE USE

CAUTION

The Reverb Unit has been carefully constructed. It is, however, a delicate electronic device. Treat it with the same care and respect given a TV set.

Avoid dropping, sudden jolts, or rough handling and it will give excellent service. This beautifully musical Reverberation effect is not to be confused with the repeating signal produced by the mechanical tape recorder style of echo units.

UNPACKING

After careful removal from carton, be sure all packing material around the tube and accessory parts is carefully removed. Take special care not to damage the speaker cone.

TUBES

Make certain all tubes are seated firmly into their respective sockets. Each tube is labeled for proper replacement should any tube be out of its socket. Be especially careful when inserting tubes to see that the pins on the tube are correctly aligned with the holes in the socket before pushing into place. Do not twist tube — push tube straight into socket. It is advisable to check tubes from time to time depending on amount of use and excellence of performance. *Be sure tubes are always returned to proper sockets and seated firmly.*

REVERB POWER UNIT SET UP INSTRUCTIONS

CAUTION

Check the current rating of the power outlet intended for use. Be positive it is 110-120 volt, 50-60 cycle A.C. (alternating current) ONLY. Never plug the Reverb Unit into a D.C. (direct current) outlet. Improper current type or rating can do serious damage.

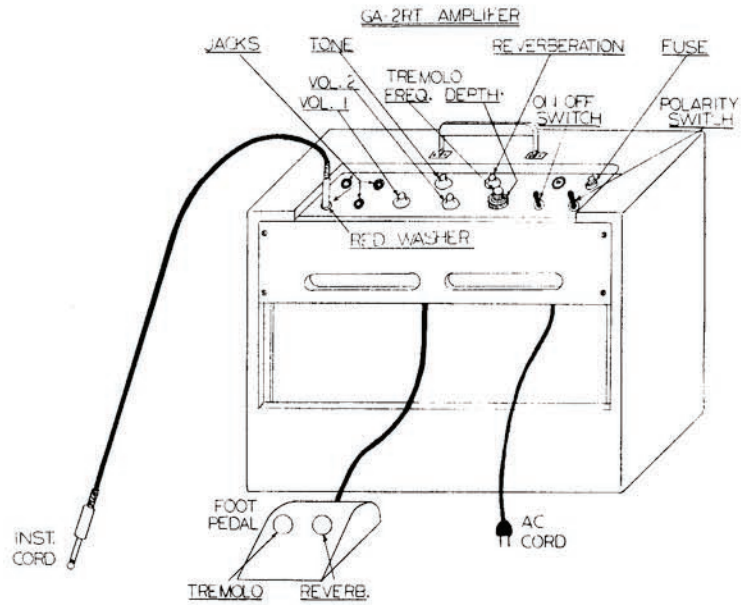

REVERBERATION — EFFECTIVE IN CHANNEL 2 ONLY

Due to the unusual flexibility of the GA-2RT Reverberation circuit, it is important that the Operator understands the various control settings to obtain the total range of Reverberation effects of which this Amplifier is capable. Illustrated below are several examples of control settings which will reproduce different Reverberation effects.

● Speed
◯ Depth

Volume 1 Tone Volume 2 Reverberation

Example No. 1. 50% Main Signal - 50% Reverb.

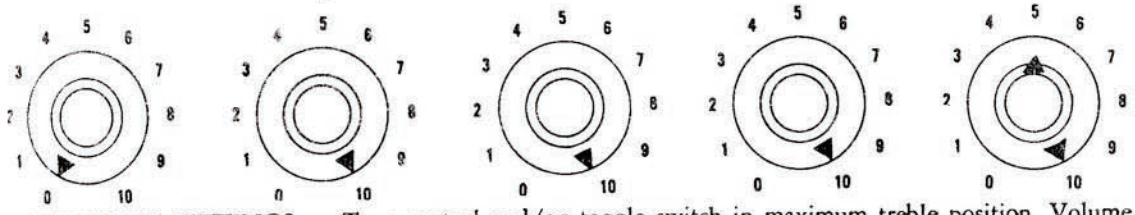

INSTRUMENT SETTINGS — Tone control and/or toggle switch in maximum treble position. Volume control setting 2½ to 3.

Example No. 2. 75% Main Signal - 25% Reverb.

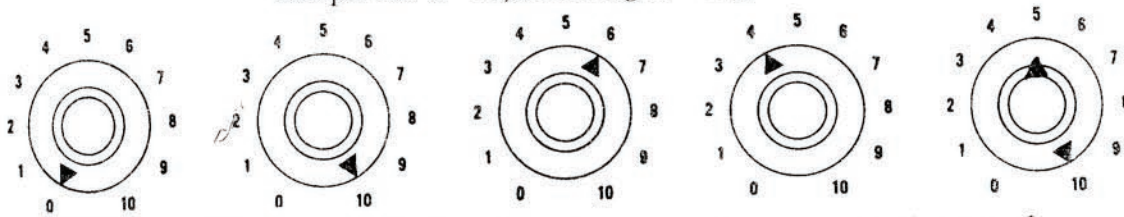

INSTRUMENT SETTINGS — Tone control same as above, Volume control setting 5 to 6.

Example No. 3. 25% Main Signal - 75% Reverb.

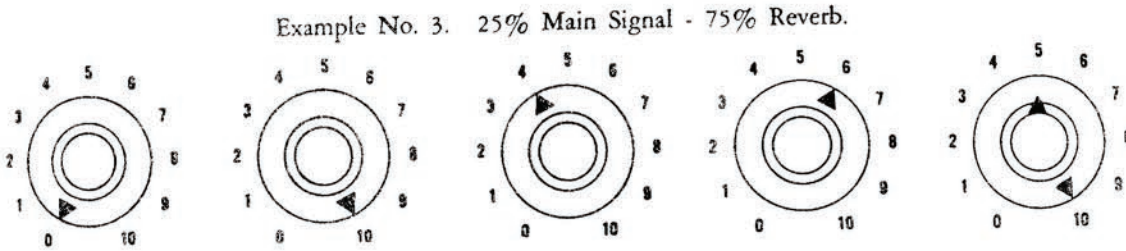

INSTRUMENT SETTINGS — Same as Example No. 2.

Example No. 4. 100% Reverb.

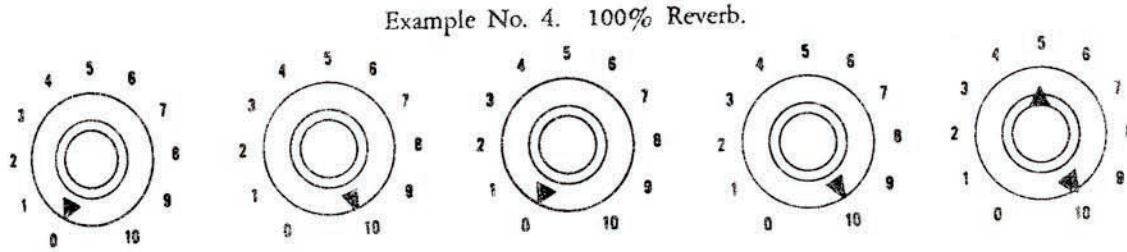

INSTRUMENT SETTINGS — Same as Example No. 2.

FOOT SWITCH MUST BE IN THE "ON" POSITION FOR REVERBERATION.

TREMOLO

The Tremolo effect adds another dimension to the Reverberation effect. It can be used either with or without reverberation at the players discretion. The Tremolo is turned on or off by the use of the foot switch. The speeds have been carefully set to cover a wide range of Tremolo effects. The Depth of the Tremolo is also variable being controlled by the Depth control.

STEREO AMPLIFIERS

When using the GA-2RT Reverb-Echo unit with Stereo Guitar and Stereo Amplifier, follow these directions —

Set up Stereo Amplifier as it would normally be used. Plug in Stereo Guitar using "Y" instrument cord (Red plug in Channel one, Jack No. 1, and Gray plug in Channel two). Now plug one end of the 15′ shielded jumper cable into the No. 2 Jack of Channel one (same channel as Red plug), and plug the other end of jumper cable into No. 1 Jack (red washer), Channel 2 of the GA-2RT. Reverb is now available when guitar toggle switch is in center or upper position.

POLARITY SWITCH

This added convenience enables the player to quickly find the polarity of the power source which reduces the A.C. hum and other extraneous noises to a minimum.

OPERATION OF MICROPHONE

Because of the high power output, high gain and high fidelity characteristics of the MAESTRO GA- 2RT AMPLIFIER it makes an exceptionally fine public address system when used with either the crystal, dynamic or velocity types of microphones.

While the amplifier will operate very well with any of the crystal, medium or high impedance dynamic or velocity (ribbon) microphones, it is recommended that a GIBSON Dealer be consulted before investing in a microphone. Authorized Gibson Dealers can supply a microphone which has been selected and matched to the amplifier, thus insuring the most faithful reproduction of voice and music.

When using a microphone it is important that the GIBSON 280 or similar shielded plug be attached to the cord. The ordinary phone plug with bakelite or other non-shielded cover is not suitable because the leads from the microphone must be completely shielded. Otherwise, objectionable hum will result. Figure A illustrates the proper way to connect the plug to the microphone cable. To use the microphone, insert the plug in the "Microphone" jack and advance the Microphone volume control until a feedback squeal or howl is produced on the loudspeaker. Reduce the volume control to just below the feedback point. This setting will vary considerably, depending upon the size of the room, its acoustical properties and the distance between the microphone and loudspeaker. Feedback is the limiting factor in all public address installations and is caused when the level of sound from the loudspeakers is sufficient to actuate the microphone. The general rule when setting up the equipment is to place the loudspeaker as far from the microphone as possible.

If the Microphone jacks are not in use, turn the Channel one volume control completely off.



Figure A

OPERATIONAL INSTRUCTIONS FOR USE OF GA-2RT IN CONJUNCTION WITH A REGULAR AMPLIFIER

The use of the GA-2RT with a regular amplifier will add a spacious liveliness to instrument reproduction that is far beyond the possibilities of single amplifier Reverberation. Listed below are the simple instructions for this type operation.

1. Plug the A.C. cord of the GA-2RT Amplifier into convenient outlet.
2. Now plug one end of the 15′ shielded jumper cable into the No. 1 Jack of Channel 2 (the one with the Red Washer). Plug the other end of the jumper cable into the input jack normally used in a regular amplifier. Set regular amplifier volume control for normal volume.
3. The Guitar instrument cord should be plugged into the No. 2 Jack of Channel 2 of the GA-2RT. Plug the A.C. line cord of the regular amplifier into a convenient outlet.
4. Turn on the A.C. switches for both amplifiers and the volume and tone controls may be set as illustrated on page 3.
5. If both Reverb. and Normal Signals are to be heard at the regular Amplifier, plug the 15 foot Shielded Jumper Cord into the Monitor Jack of the GA-2RT instead of the Jack with the Red Washer.

Illustrated below is a pictorial diagram showing the correct hook-up.

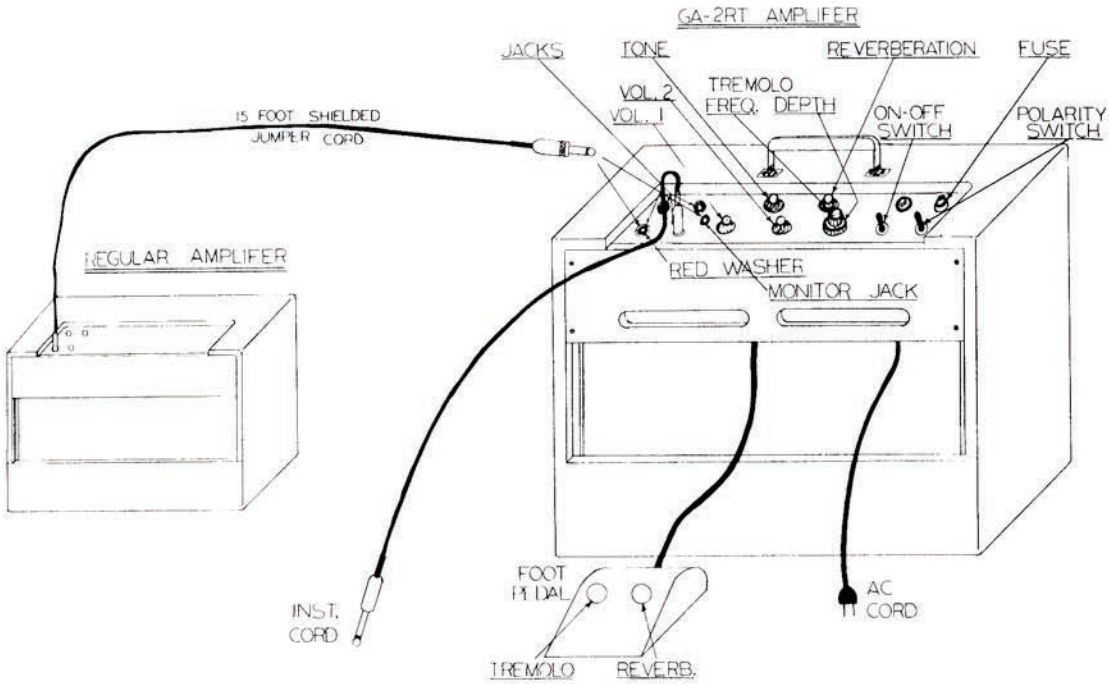

6. Place the combination reverberation, tremolo foot control switch in a convenient position and the system is ready to operate. Either, or both, reverberation and tremolo effect is available by switching the indicated switch ON or OFF.
7. The percentage of Reverberation can be controlled by the Reverberation Control, Channel 2 Volume Control and the Volume Control of the regular amplifier.
8. The instrument is ready to be played. If reverb signal is not coming through, step on the foot switch as it may be in the OFF position. Thereafter, the reverb effect can be conveniently cut in or out at a snap of the foot switch.
9. When the Reverberation Foot Switch is OFF, the reverb unit operates as a regular amplifier adding an extra self-powered speaker that expands the regular amplifier sound without reverberation. If a cord length space separates the regular amplifier and the reverberation unit, an excellent impression of the "Stereo" and echo effect is obtained.
   When Reverberation Foot Switch is ON, the reverb signal is super-imposed on the above "Stereo" sound with a minimum contrast of volume change.

CAUTION

The Reverberation Unit must always be placed on a solid non-vibrating surface or footing when in operation.

Any sudden shock, jolt, or wiggle, when in use, will cause undesirable noise. The resultant clatter of an inadvertant shake or bump is annoying but not necessarily harmful. This delicate sensitivity to shock and vibration is a normal characteristic of the device.

No problem will be encountered while the unit is connected if supporting surface is solid and unit is not moved about. To avoid the unwanted noise, turn the reverberation unit off by pressing the foot switch.

GENERAL

Amplifiers are carefully packed to prevent damage in shipment. However, upon receipt of the amplifier, examine carefully to determine if there has been breakage of tubes or parts. If damage has occurred during shipment, call the Transportation Company immediately, and place a claim.

CAUTION

Damage to the amplifier will result if it is connected to an improper power source. This amplifier is designed to be operated on 105-125 volt, 50-60 cycle alternating current only. The voltage from the power lines should not exceed 125, and the frequency of the current should be either 50 or 60 cycles. When ready to use power, insert the plug on the power cord into the electric outlet and move switch to "on." After approximately one minute for the tubes to heat, the amplifier is ready for use.

TUBES

Inspect tubes to determine if they are in their proper positions before placing the amplifier in operation. All tubes have been tested and proved satisfactory before shipment.

SERVICE

If the amplifier is in need of servicing, it should be taken to a reliable radio man. The electrical diagram in this folder should be shown the repairman to assist him in servicing the amplifier.

* * * *

FUSE

The fuse used in the GA-2RT Amplifier is a type 3AG of two ampere rating. DO NOT USE FUSES OF HIGHER RATING.

GA2-RVT

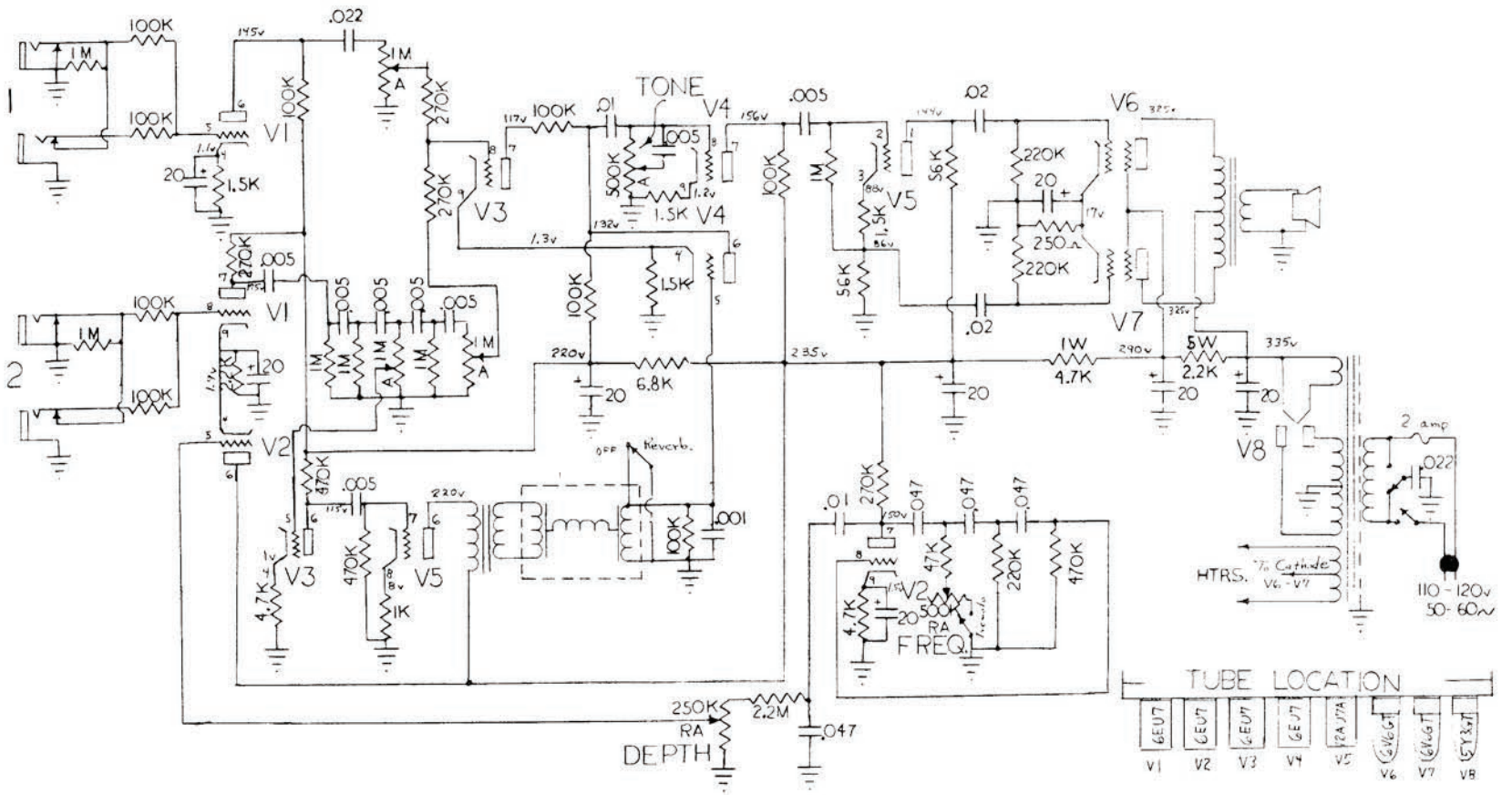

TONE
V1
V2
V3
V4
V5
V6
V7
V8
1
2
100K
1M
.022
270K
.005
.01
500K
1.5K
6.8K
.001
470K
4.7K
1K
.047
47K
220K
56K
.02
250Ω
1W
4.7K
5W
2.2K
2 amp
HTRS.
To Cathode V6-V7
110-120v 50-60~
Reverb.
OFF
FREQ.
250K RA
DEPTH
2.2M
TUBE LOCATION
6EU7
12AJ7A
6V6GT
5Y3GT

Gibson

REVERB III

MODEL GA-3RV

INSTRUCTIONS

PRODUCT OF

Gibson Electronics

KALAMAZOO, MICHIGAN

IMPORTANT — READ CAREFULLY BEFORE USE

CAUTION

The Reverb Unit has been carefully constructed. It is, however, a delicate electronic device. Treat it with the same care and respect given a TV set.

Avoid dropping, sudden jolts, or rough handling and it will give excellent service. This beautifully musical Reverberation effect is not to be confused with the repeating signal produced by the mechanical tape recorder style of echo units.

UNPACKING

This Reverb Accessory was carefully packed to prevent damage in shipment. However, upon receipt of the unit, examine carefully to determine if there has been breakage or damage of parts. If damage has occurred during shipment, call the Transportation Company immediately, and place a claim.

REVERB POWER UNIT SET UP INSTRUCTIONS

CAUTION

Damage to the Reverb Unit will result if it is connected to an improper power source. This Reverb Unit is designed to be operated on 105-125 volt, 50-60 cycle alternating current only. The voltage from the power lines should not exceed 125, and the frequency of the current should be either 50 or 60 cycles. When ready to use, insert the plug on the power cord into the electric outlet and move switch to "on." The unit is ready for immediate use.

The Reverberation Unit must always be placed on a solid non-vibrating surface or footing when in operation.

Any sudden shock, jolt, or wiggle, when in use, will cause undesirable noise. The resultant clatter of an inadvertant shake or bump is annoying but not necessarily harmful. This delicate sensitivity to shock and vibration is a normal characteristic of the device.

No problem will be encountered while the unit is connected if supporting surface is solid and unit is not moved about. To avoid the unwanted noise, turn the reverberation unit off by pressing the foot switch.

Operation: (a) Plug the instrument cord into the jack marked "instrument" on the reverberation control panel.

(b) Connect the 10 foot shielded cord with plug to an amplifier input jack.

(c) Plug the AC line cord of this unit into a 117 volt 60 cycle outlet.

(d) Remove the foot pedal from its carrying hanger and place in a convenient location.

(e) Turn on AC power. No warm up time is required.

(f) Turn up Reverberation control about half way and strike a note or chord and damp the strings quickly.

(g) If no reverberation is heard push the switch on the foot pedal and repeat, adjusting level of reverberation as desired by means of reverberation control.

(h) In the maximum clockwise position it may be possible to have feedback or howl due to regeneration build up. Do not try to use at this level, reduce reverberation control slightly until this disappears. This is then the maximum usable reverberation.

(i) For maximum signal to noise ratio the volume control on the instrument should normaly be carried near its maximum and the volume control on the amplifier as low as possible and still obtain the desired sound level.

(j) If desired this unit may be operated with the case placed on end but sudden jars will cause a loud crash to be heard from the speaker of the amplifier. This can be used as an "attention" signal if desired and may be readily turned off and on by means of the foot pedal switch.

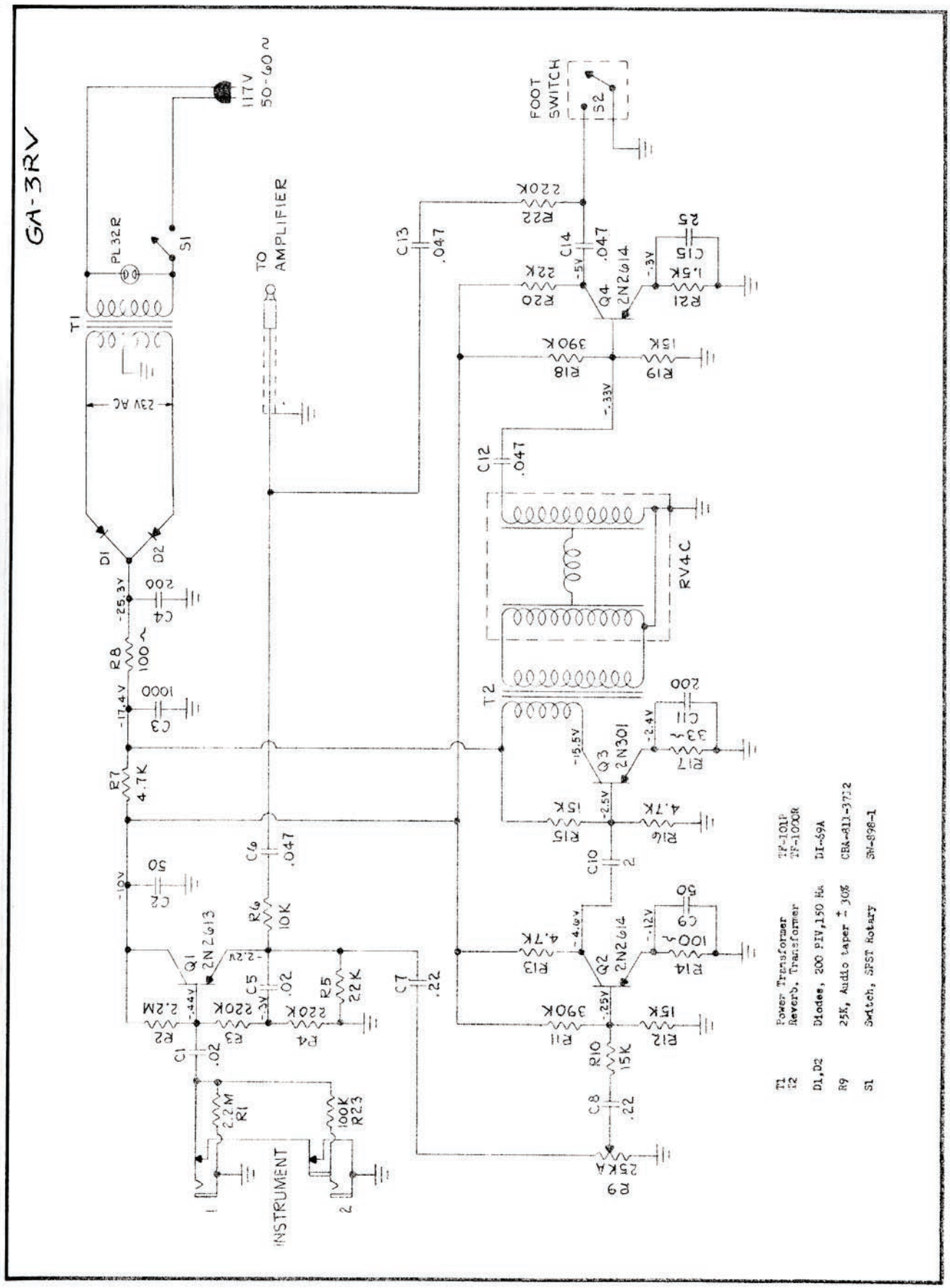

12-64 500 H.P.Co.

Gibson

REVERB-ECHO

MODEL GA-4RE

INSTRUCTIONS

PRODUCT OF

Gibson Electronics

KALAMAZOO, MICHIGAN

GA-4RE (Reverb Echo)

The GA-4RE records music with an electronic pen. The record is made on a film of oil which also serves to lubricate the revolving disc which is the platter for the film. The film is constantly replaced and can never wear out like a magnetic tape. Following the electronic pen are two sensors which reproduce the pattern of electrons for the amplifier. The effect is a multiple choice of echo and reverberant sound with a quality never before achieved.

The GA-4RE has a wide range of facility as follows:

1. Two inputs
   (a) Input #1 has enough sensitivity for any electric guitar.
   (b) Input #2 is provided for tape dubbing so that reverb or echo can be added to a final recording from an original tape.

2. The loudness control is for input #2 only, to accommodate the wide range of output levels of various tape playbacks.

3. The control marked "direct" controls the amplification separately from the reverb-echo. It is recommended that for average playing some direct sound always be used. This will enhance the effect of the reverb-echo.

4. "Reverb" control varies the amount of reverb-echo. A mixture of direct and reverb to suit your taste can be achieved by the proper settings of the two controls "direct" and "reverb."

5. The mode control has three positions. Position #1 simulates room reverberation with a soft echo. Position #2 provides reverberation with a bold echo with a given repetition rate. Position #3 is similar to position #2 except that the echo rate is quicker. To quickly identify the different sounds possible, mute the strings near the nut or bridge and then listen to the string plucked with the three different positions of the switch.

6. The "output" jack is provided to connect the Reverb-Echo to a guitar amplifier. A regular shielded guitar cord is recommended.

7. A power switch is provided in a convenient location on the front panel. If hum from local interference is encountered a ground clip on the power cord clipped on a suitable ground should reduce the hum.

8. A fuse on the front panel should never be replaced with one rated larger than one ampere.

9. A foot switch is provided to turn the reverb system on and off.

Three tubes
2 diodes
2 Zener Diodes
1 Foot switch (single)
1 Electrostatic record and playback

IMPORTANT NOTE:—This unit should be operated ***only*** in the horizontal position. The exact angle is not critical but do not operate upside down, on end or on its back. The recording medium is on oil. The correct amount is placed in the unit at the factory. The unit is sealed at the factory and if not tampered with no problem will be experienced. ***Do not open the metal container which surrounds the recording element.***

GA-4RE

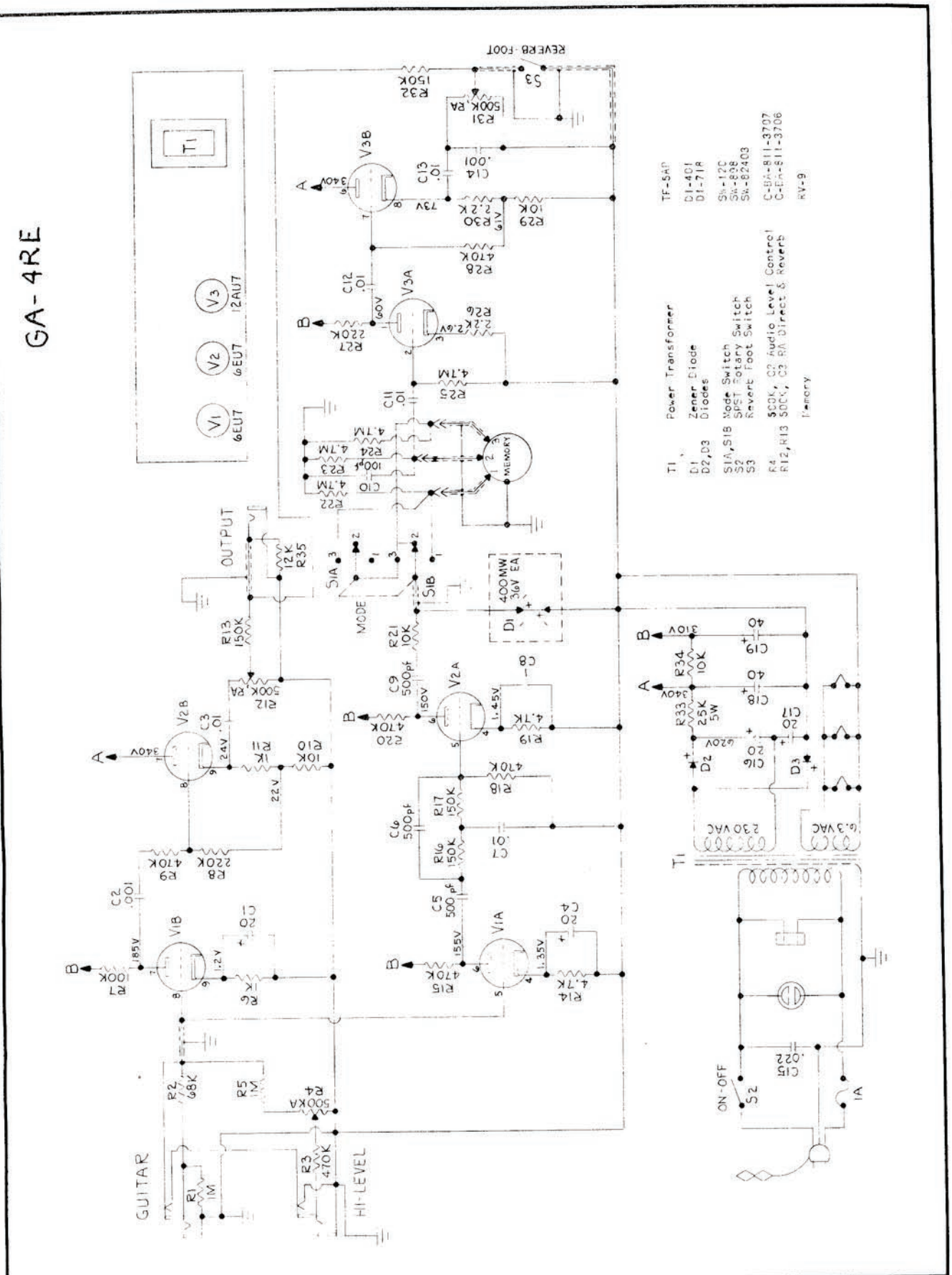
T1
V1 6EU7
V2 6EU7
V3 12AU7
REVERB FOOT
S3
R32 150K
R31 500K, RA
V3B
C13 .01
C14 .001
340V
73V
R30 2.2K
R29 10K
R28 470K
V3A
C12 .01
60V
R27 220K
R26 2.2K
2.6V
R25 4.7M
C11 .01
4.7M
R24 4.7M
R23 100pf
C10 4.7M
R22 4.7M
MEMORY
OUTPUT
12K R35
S1A
S1B
MODE
400MW 36V EA
D1
R13 150K
R12 500K, RA
R21 10K
C9 500pf
150V
V2B
C3 .01
24V
R11 1K
R10 10K
V2A
C8
1.45V
4.7K R19
R20 470K
R18 470K
R17 150K
C6 500pf
R16 150K
C7 .01
C5 500 pf
155V
V1B
C1 20
1.85V
1.2V
R7 100K
R6 1K
V1A
C4 20
1.35V
R15 470K
R14 4.7K
R9 470K
R8 220K
C2 .001
R2 68K
R5 1M
R4 500KA
R3 470K
R1 1M
GUITAR
HI-LEVEL
B
A
C19 40 310V
C18 40 340V
R34 10K
R33 25K 5W
C17 20
C16 20 420V
D2
D3
230 VAC
6.3 VAC
T1
ON-OFF
S2
C15 .022 1A
TF-5AP
T1 Power Transformer
D1-401
D1-71A
D1 Zener Diode
D2,D3 Diodes
Sw-120
Sw-838
Sw-82403
S1A,S1B Mode Switch
S2 SPST Rotary Switch
S3 Reverb Foot Switch
C-BA-811-3707
C-EA-811-3706
RV-9
R4 500K, C2 Audio Level Control
R12,R13 500K, C3 RA Direct & Reverb
Memory

GIBSON

MODEL GA-5 AMPLIFIER

INSTRUCTIONS

GIBSON INC., KALAMAZOO, MICH.

71157 2000

GA-5

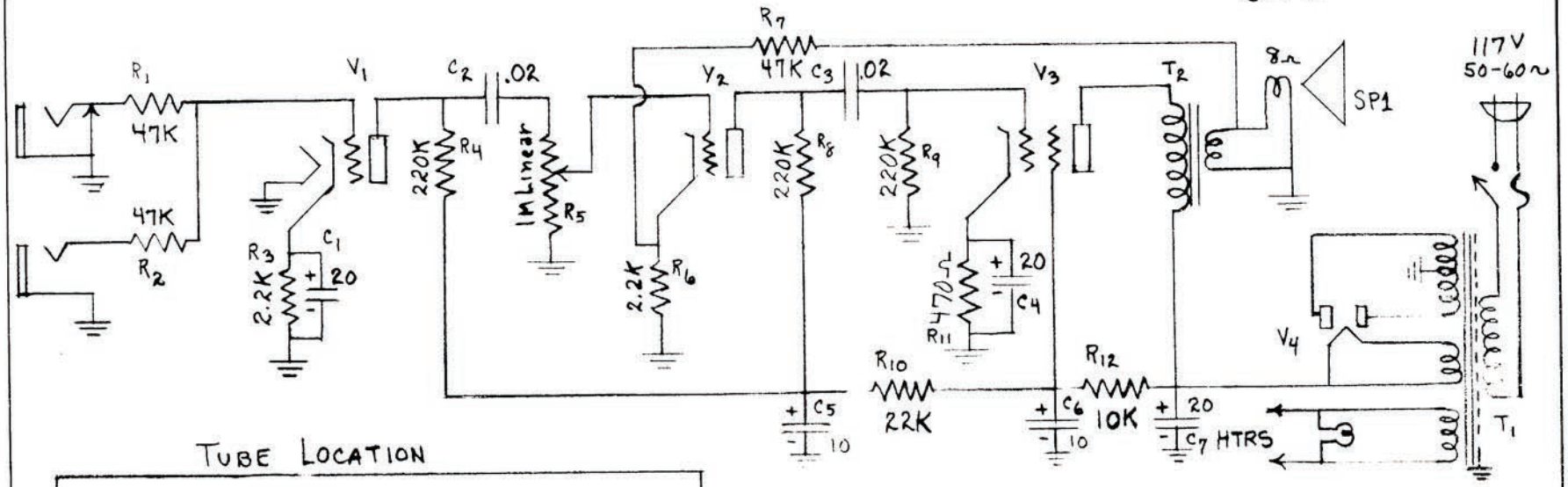

TUBE LOCATION

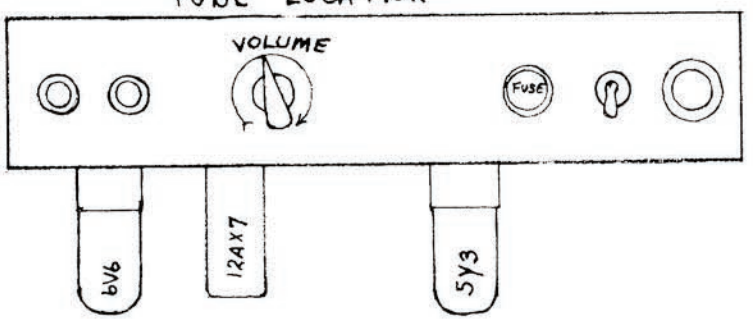

DC VOLTAGES TO CHASSIS USING VTVM (11 MEG INPUT)				
TUBE	USE	PLATE	SCREEN	CATHODE
V1 ½12AX7	VOLTAGE AMPLIFIER	165	—	1.5
V2 "	" "	165	—	1.5
V3 6V3	POWER "	375	350	20
V4 5Y3	RECTIFIER	300 V AC	—	380

PARTS LIST

R_1 R_2 R_7 47K ½W, R_3 R_6 2.2K ½W, R_4 R_8 R_9 220K ½W, R_{10} 22K 1W, R_{11} 470Ω 1W, R_{12} 10K 1W, R_5 1MEG LINEAR TAPER

C_1 C_4 20MFD 25 VOLT, C_2 C_3 .02 MFD 400 VOLT, C_5 C_6 10MFD 450 VOLT, C_7 20MFD 450 VOLT

T_1 POWER TRANSFORMER # GA5P T_2 OUTPUT TRANSFORMER # GA5-O SP1 SPEAKER, 8" dia, 8Ω VC, TYPE 8J11.

When only one instrument is used plug into #1 input jack.

This amplifier designed for 105-125 volt, 50-60 cycle current. Damage will result if connected to improper power source.

Use the above schematic to facilitate service by a reliable radio man.

Do not use higher rating fuse than one ampere, type 3 A.G.

This amplifier was carefully checked and in good playing condition when shipped. If damaged when received call transportation company immediately and place claim.

GIBSON

"Skylark"

TREMOLO

MODEL GA-5T AMPLIFIER

INSTRUCTIONS

PRODUCT OF

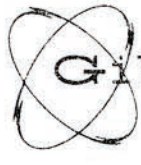

KALAMAZOO, MICHIGAN

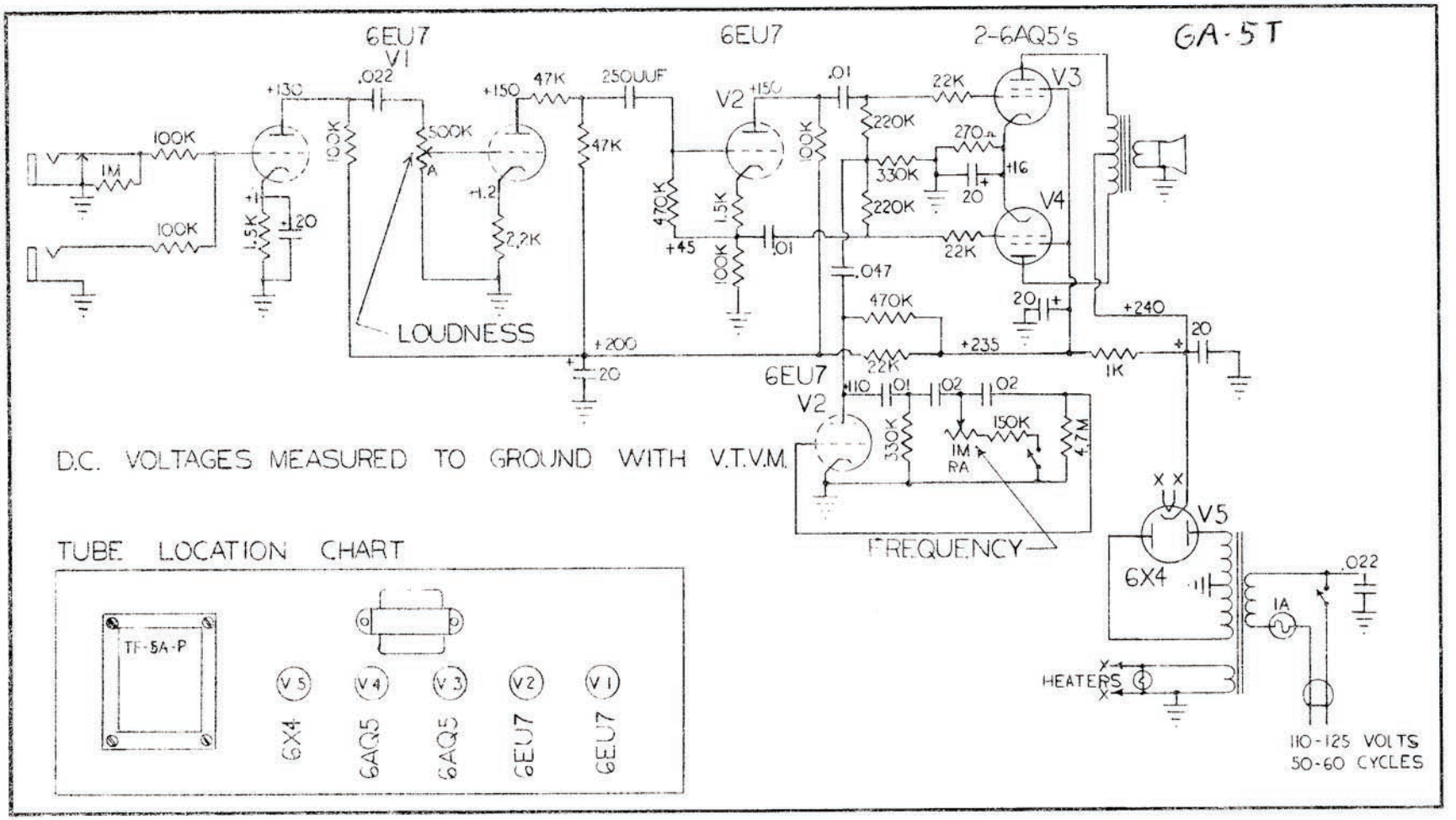

H.P.Co.

INSTRUCTIONS

When only one instrument is used, plug into No. 1 input jack.

The Tremolo effect is turned on by the Pointer knob marked "Frequency" located on the Control Panel. The speeds have been set to cover a wide range of Tremolo effects.

This amplifier is designed for 105-125 volt, 50-60 cycle current. Damage will result if connected to improper power source.

Use the above schematic to facilitate service by a reliable radio man.

Do not use higher rating fuse than one ampere, Slo-Blo, type 3 A.G.

This amplifier was carefully checked and in good playing condition when shipped. If damaged when received call transportation company immediately and place claim.

GIBSON

Les Paul TV

MODEL AMPLIFIER

INSTRUCTIONS

GIBSON INC., KALAMAZOO, MICH.

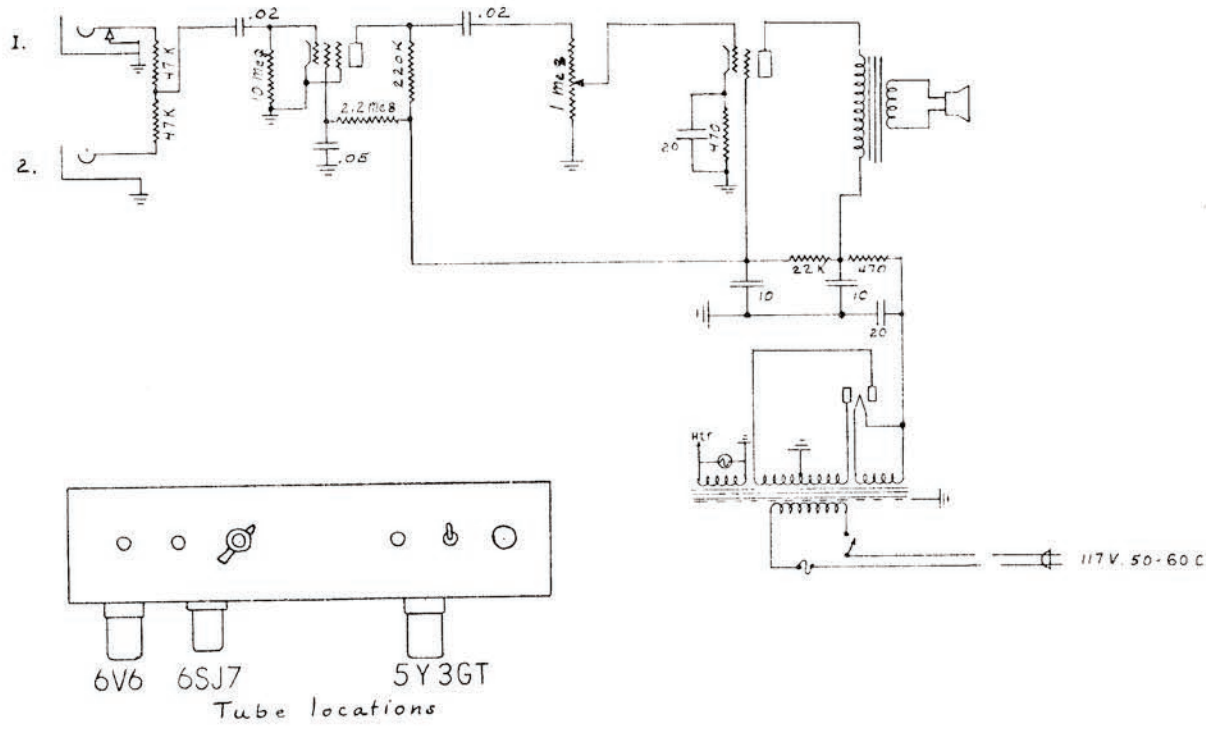

Les Paul

When only one instrument is used plug into #1 input jack.

This amplifier designed for 105-125 volt, 50-60 cycle current. Damage will result if connected to improper power source.

Use the above schematic to facilitate service by a reliable radio man.

Do not use higher rating fuse than one ampere, type 3 A.G.

This amplifier was carefully checked and in good playing condition when shipped. If damaged when received call transportation company immediately and place claim.

GIBSON

Les Paul Junior

MODEL AMPLIFIER

INSTRUCTIONS

GIBSON INC., KALAMAZOO, MICH.

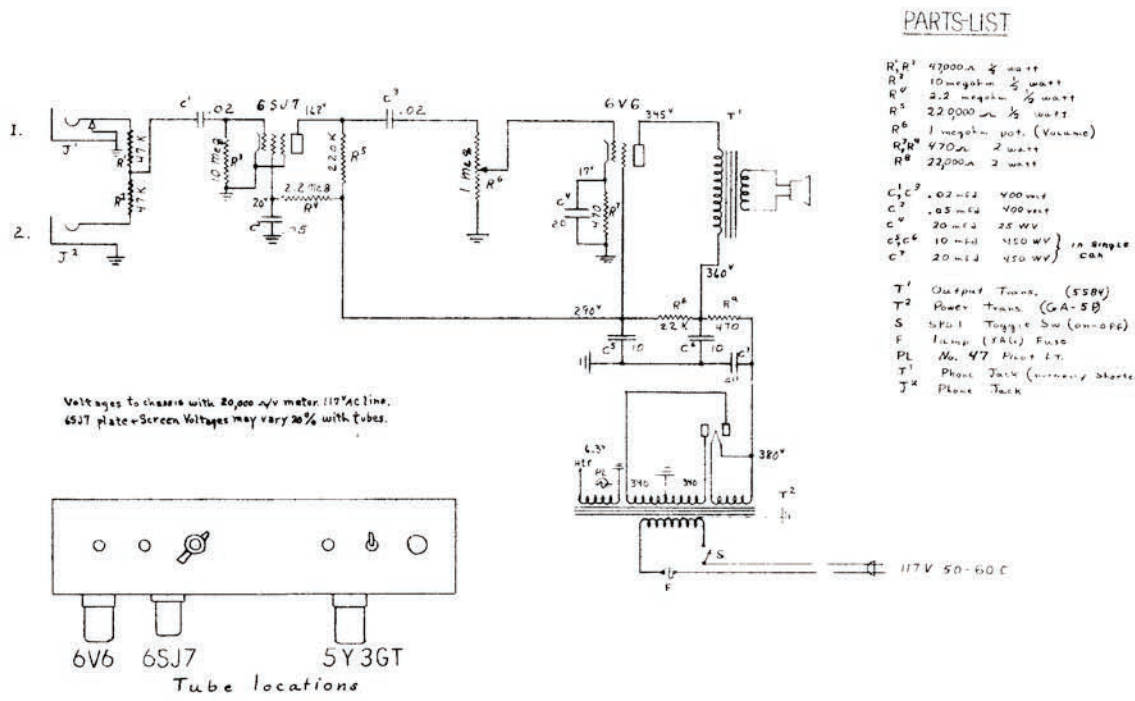

When only one instrument is used plug into #1 input jack.

This amplifier designed for 105-125 volt, 50-60 cycle current. Damage will result if connected to improper power source.

Use the above schematic to facilitate service by a reliable radio man.

Do not use higher rating fuse than one ampere, type 3 A.G.

This amplifier was carefully checked and in good playing condition when shipped. If damaged when received call transportation company immediately and place claim.

GIBSON

MODEL GA-6 AMPLIFIER

INSTRUCTIONS

GIBSON INC., KALAMAZOO, MICH.

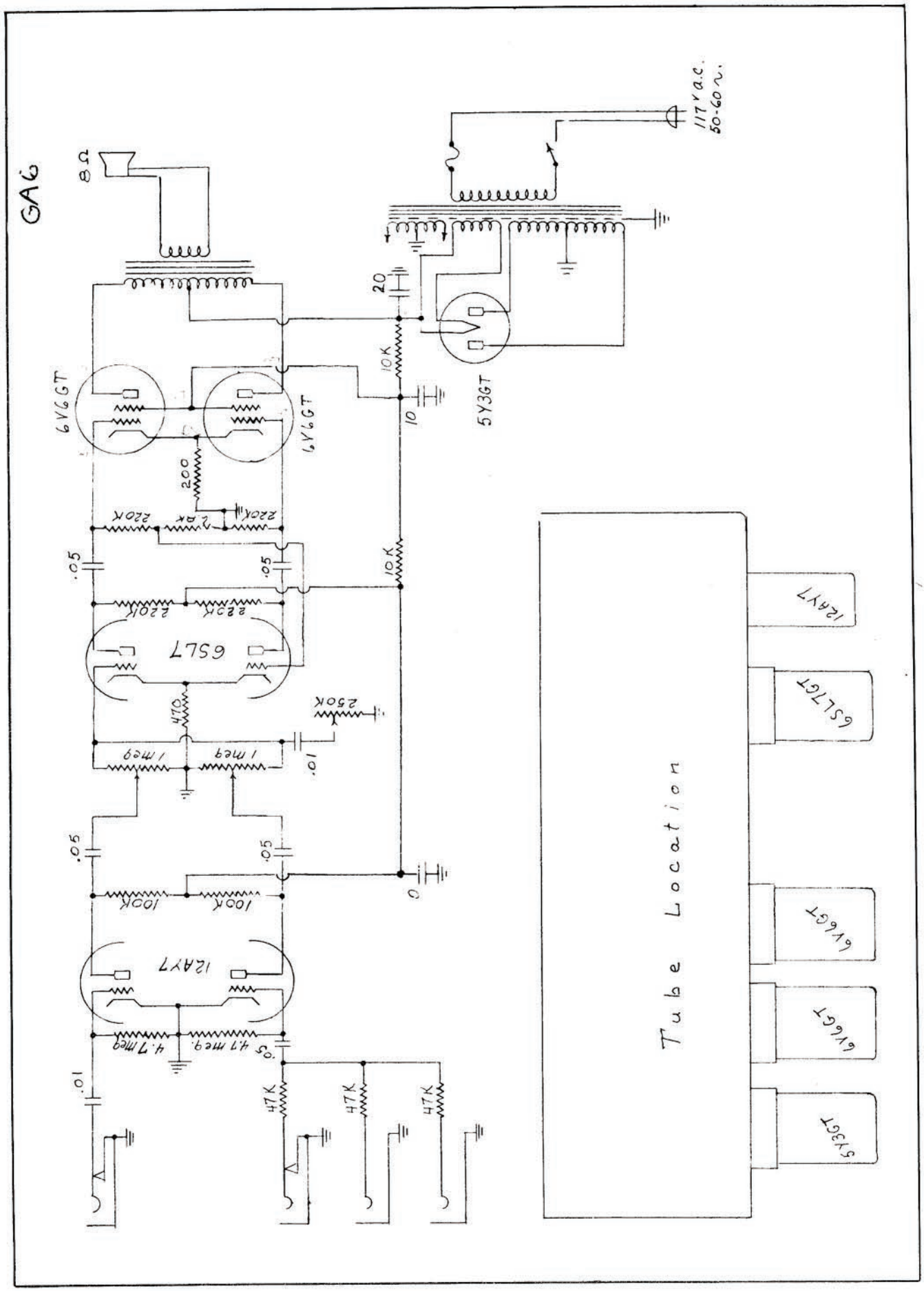
GA6
8Ω
117 v a.c.
50-60 ~.
6V6GT
6V6GT
5Y3GT
20
10K
10
200
220K
2.2K
.05
6SL7
470
250K
.01
1meg
100K
12AY7
4.7meg
47K
Tube Location
12AY7
6SL7GT
6V6GT
6V6GT
5Y3GT



FIGURE A

OPERATION OF INSTRUMENT

Four input Circuits: Three for instruments--one for microphone which can be used by an additional instrument.

When one, two, or three instruments are plugged into the jacks marked "Instruments," three stages of amplification are used.

The socket marked MICROPHONE may also be used with any of the GIBSON electrical instruments. When used this way a careful setting of the volume control marked MICROPHONE must be made to avoid overload and consequent distortion. This adjustment can be easily made by turning the volume control on the guitar or other instrument all the way on and setting the MICROPHONE control at the point where no distortion occurs when the strings are struck with maximum force. By utilizing the MICROPHONE socket in this way a fourth instrument can be plugged in, making a total of four electrical instruments which may be used and blended.

The tone control circuit for this amplifier has been designed to give the player an extremely wide range of tonal coloring. With the tone control set to the extreme bass a very pleasing tone is produced by instruments having their pick-ups placed close to the finger board. With the tone control set to the extreme treble, unusual brilliance may be obtained from instruments that have the pick-up placed close to the bridge.

Separate volume controls for instrument and mike circuits. Combination tone and volume control.

OPERATION OF THE MICROPHONE

Because of the high power output, high gain and high fidelity characteristics of the GIBSON GA-6 amplifier it makes an exceptionally fine public address system when used with either the crystal, dynamic or velocity types of microphones.

While the amplifier will operate very well with any of the crystal, medium or high impedance dynamic or velocity (ribbon) microphones, it is recommended that, before investing in a microphone, you consult your GIBSON dealer. Authorized GIBSON dealers can supply you with a microphone which has been selected and matched to the amplifier, thus insuring the most faithful reproduction of voice and music.

When using a microphone it is important that the GIBSON 75A or similar shielded plug be attached to the cord. The ordinary phone plug with bakelite or other non-shielded cover is not suitable because the leads from the microphone must be completely shielded. Otherwise objectionable hum will result. Figure A illustrates the proper way to connect the plug to the microphone cable.

To use the microphone, insert the plug in the MICROPHONE socket and advance the MICROPHONE volume control until a feedback squeal or howl is produced in the loudspeaker. Reduce the volume control to just below the feedback point. This setting will vary considerably

OPERATION OF THE MICROPHONE (Cont'd)

depending upon the size of the room, its acoustical properties and the distance between the microphone and loudspeaker. Feedback is the limiting factor in all public address installations and is caused when the level of sound from the loudspeakers is sufficient to actuate the microphone. The general rule when setting up the equipment is to place the loudspeaker as far from the microphone as possible.

The volume controls INSTRUMENTS and MICROPHONE, being completely independent of each other, allow the inputs from the various sources to be "mixed" or blended. Because of this flexibility many unusual effects can be easily worked out.

If the MICROPHONE socket is not in use turn the MICROPHONE volume control all the way off.

TOP MOUNTED CHASSIS

Easily accessible control panel; five tubes, including one special input tube designed to reduce microphonic noises, hum and distortion in both the instrument and microphone circuits.

GENERAL

Amplifiers are carefully packed to prevent damage in shipment. However, upon receipt of the amplifier, look it over carefully to make sure there has been no breakage of tubes or parts. If you find that damage has occurred during shipment, we suggest the Transportation Company be called immediately, and a claim placed.

CAUTION

Damage to the amplifier will result if it is connected to an improper power source. This amplifier is designed to be operated on 105-125 volt, 50-60 cycle alternating current only. Make sure the voltage from the power lines is not over 125, and that the frequency of the current is either 50 or 60 cycles. When ready to turn on power, plug the power cord into the electric outlet and turn on the switch. Wait approximately one minute for the tubes to heat, and the amplifier is ready for use.

TUBES

Be sure tubes are in their proper positions before placing the amplifier in operation. All tubes have been tested and proved satisfactory before shipment.

SERVICE

If the amplifier is in need of servicing, we suggest it be taken to a reliable radio man. The electrical diagram attached should be shown the repairman to assist him in servicing the amplifier.

* * *

The fuse used in the GA-6 amplifier is a type AG of two ampere rating. DO NOT USE FUSES OF HIGHER RATING.

GIBSON

"LANCER"

MODEL GA-6 AMPLIFIER

INSTRUCTIONS

GIBSON INC., KALAMAZOO, MICHIGAN

GA-6

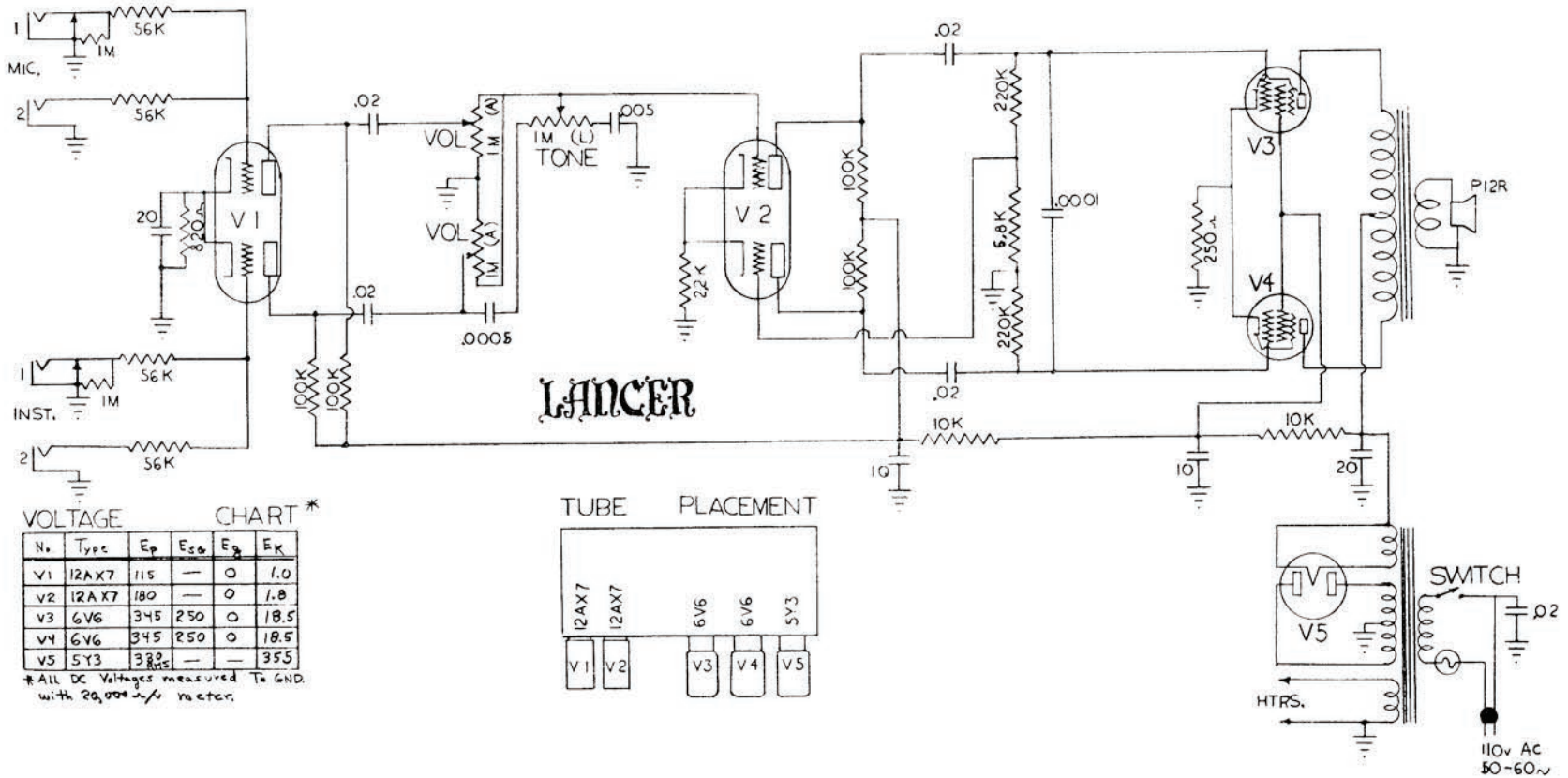

VOLTAGE CHART *

No.	Type	E_p	E_{sg}	E_g	E_K
V1	12AX7	115	—	0	1.0
V2	12AX7	180	—	0	1.8
V3	6V6	345	250	0	18.5
V4	6V6	345	250	0	18.5
V5	5Y3	330 RMS	—	—	355

*All DC Voltages measured To GND. with 20,000 Ω/V meter.

TUBE PLACEMENT

GIBSON "LANCER"

MODEL GA-6 AMPLIFIER

OPERATION OF INSTRUMENT

When one or two instruments are plugged into the jacks marked "Instruments," three stages of amplification are used. The total gain of both being set with the control marked "Channel 2."

The jacks marked "Instruments" or "Microphone" may also be used with any of the GIBSON Electrical Instruments. When used this way, a careful setting of the volume control marked "Microphone" must be made to avoid overload and consequent distortion. This adjustment can easily be made by turning the Volume Control on the guitar or other instrument completely on, and setting the Channel 1 Control at a point where no distortion occurs when the strings are struck with maximum force. By utilizing the Microphone jacks in this way, two or more instruments can be plugged in, making a total of four electrical instruments which may be used and blended

Jacks in either channel marked Number 1 should be used first. The second Instrument or Microphone should be used in the Jacks marked Number 2.

The tone control circuit for this Amplifier has been designed to give the player an extremely wide range of tonal coloring.



FIGURE A

OPERATION OF MICROPHONE

Because of the high power output, high gain and high fidelity characteristics of the GIBSON GA-6 AMPLIFIER it makes an exceptionally fine public address system when used with either the crystal, dynamic or velocity types of microphones.

While the amplifier will operate very well with any of the crystal, medium or high impedance dynamic or velocity (ribbon) microphones, it is recommended that a GIBSON Dealer be consulted before investing in a microphone. Authorized Gibson Dealers can supply a microphone which has been selected and matched to the amplifier, thus insuring the most faithful reproduction of voice and music.

When using a microphone it is important that the GIBSON 280 or similar shielded plug be attached to the cord. The ordinary phone plug with bakelite or other non-shielded cover is not suitable because the leads from the microphone must be completely shielded. Otherwise, objectionable hum will result. Figure A illustrates the proper way to connect the plug to the microphone cable. To use the microphone, insert the plug in the "Microphone" jack and advance the Microphone volume control until a feedback squeal or howl is produced on the loudspeaker. Reduce the volume control to just below the feedback point. This setting will vary considerably, depending upon the size of the room, its acoustical properties and the distance between the microphone and loudspeaker. Feedback is the limiting factor in all public address installations and is caused when the level of sound from the loudspeakers is sufficient to actuate the microphone. The general rule when setting up the equipment is to place the loudspeaker as far from the microphone as possible.

If the Microphone jacks are not in use, turn the Microphone volume control completely off.

GENERAL

Amplifiers are carefully packed to prevent damage in shipment. However, upon receipt of the Amplifier, examine carefully to determine if there has been breakage of tubes or parts. If damage has occurred during shipment, the Transportation Company should be notified immediately, and a claim placed.

CAUTION

Damage to the Amplifier will result if it is connected to an improper power source. This Amplifier is designed to be operated on 105 - 125 volt, 50 - 60 cycle alternating current ONLY. Check the voltage from the power lines to determine that it is not over 125 volts, and that the frequency of the current is either 50 or 60 cycles.

When ready to use power, plug the power cord into the electric outlet and move the switch to the ON position. Approximately one minute is required for the tubes to heat before the Amplifier is ready for use.

TUBES

Check tubes for proper positioning before placing the Amplifier in operation. All tubes have been tested and proved satisfactory before shipment.

SERVICE

If the Amplifier is in need of servicing, consult a reliable radio man. The electrical diagram herein should be shown to the repairman to assist him in servicing the Amplifier.

FUSE

The fuse used in the GIBSON GA-6 AMPLIFIER is a type 3 AG of one ampere rating. DO NOT USE A FUSE OF HIGHER RATING.

GIBSONETTE

MODEL AMPLIFIER

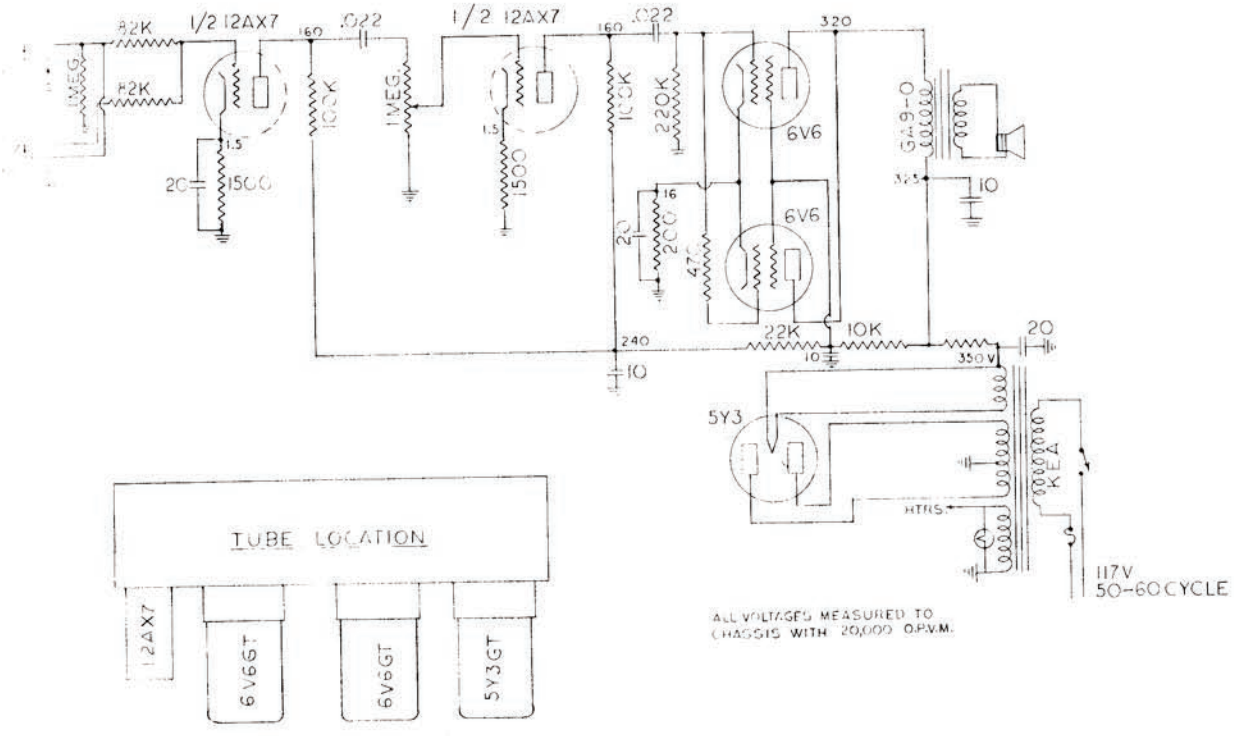

GIBSON INC., KALAMAZOO, MICH.

GIBSONETTE

MODEL AMPLIFIER

INSTRUCTIONS

GIBSON INC., KALAMAZOO, MICH.

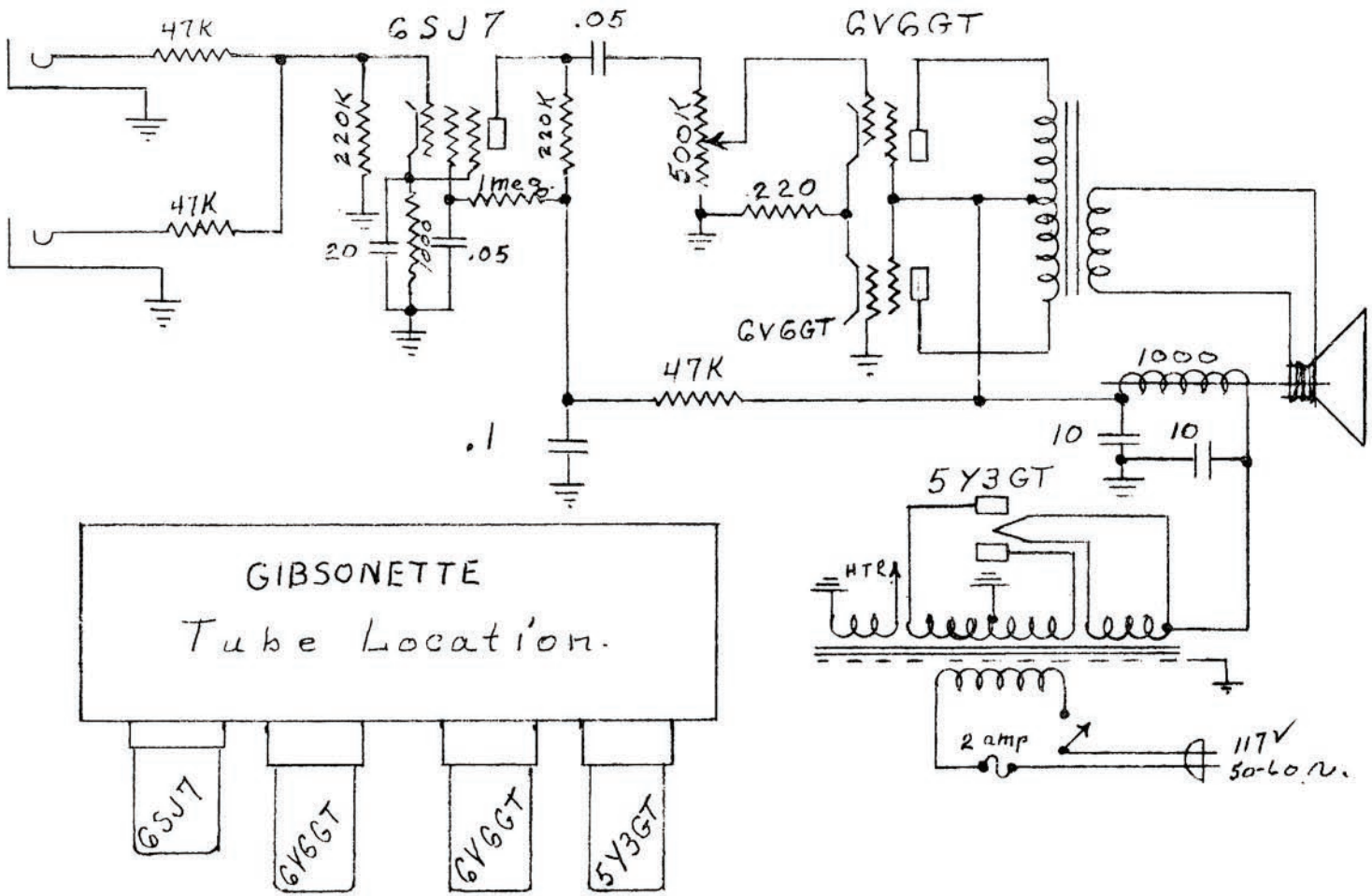
47K
6SJ7
.05
6V6GT
220K
220K
500K
1meg.
220
47K
20
1000
.05
6V6GT
47K
1000
.1
10
10
5Y3GT
HTR
GIBSONETTE
Tube Location.
2 amp
117V
50-60 ~.
6SJ7
6V6GT
6V6GT
5Y3GT

GIBSON

DISCOVERER
MODEL GA-8 AMPLIFIER

INSTRUCTIONS

GIBSON INC., KALAMAZOO, MICH.

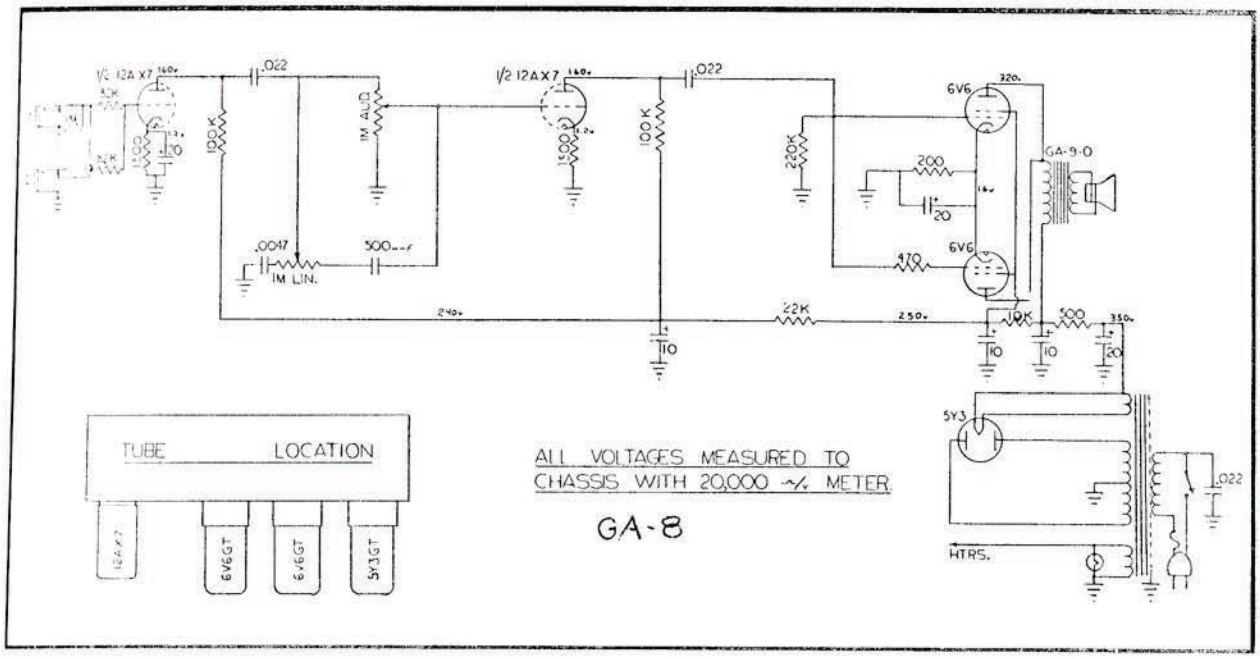

OPERATION OF INSTRUMENTS

When either one or two instruments are plugged into the sockets marked INSTRUMENTS, three stages of amplification are used, the total gain being controlled by the volume control marked INSTRUMENTS.

Newly engineered, the GA-8 Discoverer is a large professional size amplifier of durable, compact, attractive design with a clear powerful tone. Lightweight, and easy to handle, it is of solid wood lock-joint construction with gold patterned fabric covering accented by a rich, dark grille.

Its unbelievable value includes top mounted, four tube chrome plated chassis; top mounted control panel; 9 watts output, two instrument inputs; Jensen 12" speaker, volume control, tone control on-off switch, jeweled pilot light, protective fuse. Large professional size 20" wide, 16" high, 9" deep; weight 20 lbs.

GENERAL

Amplifiers are carefully packed to prevent damage in shipment. However, upon receipt of the Amplifier, examine carefully to determine if there has been breakage of tubes or parts. If damage has occurred during shipment, the Transportation Company should be notified immediately, and a claim placed.

CAUTION

Damage to the Amplifier will result if it is connected to an improper power source. This Amplifier is designed to be operated on 105 - 125 volt, 50 - 60 cycle alternating current ONLY. Check the voltage from the power lines to determine that it is not over 125 volts, and that the frequency of the current is either 50 or 60 cycles.

TUBES

Check tubes for proper positioning before placing the Amplifier in operation. All tubes have been tested and proved satisfactory before shipment.

SERVICE

If the Amplifier is in need of servicing, consult a reliable radio man. The electrical diagram herein should be shown to the repairman to assist him in servicing the Amplifier.

FUSE

The fuse used in the GA-8 GIBSON AMPLIFIER is a type 3AG of one ampere rating. DO NOT USE A FUSE OF HIGHER RATING.

GIBSON

DISCOVERER
MODEL GA-8 AMPLIFIER

INSTRUCTIONS

PRODUCT OF

Gibson Electronics

KALAMAZOO, MICHIGAN

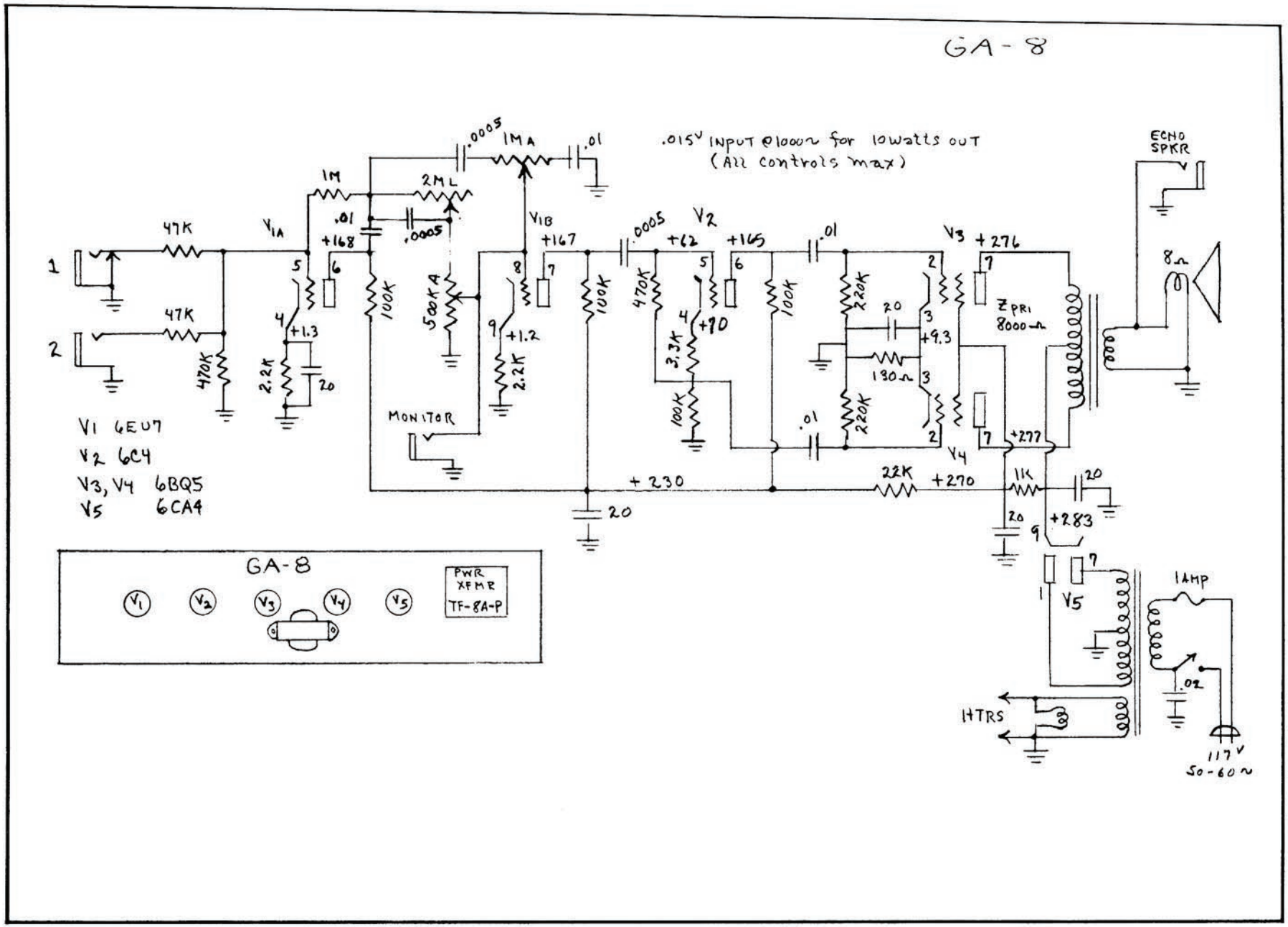
GA-8
.015V INPUT @1000Ω for 10watts OUT
(All controls max)
ECHO SPKR
8Ω
1
2
47K
47K
470K
V1A
1M
.01
+168
2.2K
20
+1.3
100K
.0005
2ML
.0005
500KA
MONITOR
V1B
1MA
.01
+167
+1.2
2.2K
100K
.0005
V2
+62
+165
470K
3.3K
+70
100K
100K
.01
.01
220K
220K
20
130Ω
+9.3
V3
+276
V4
+277
ZPRI 8000Ω
+230
20
22K
+270
1K
20
20
+283
V5
1AMP
.02
HTRS
117V 50-60~
V1 6EU7
V2 6C4
V3, V4 6BQ5
V5 6CA4
GA-8
PWR XFMR TF-8A-P

INSTRUCTIONS

CAUTION

Damage to the Amplifier will result if it is connected to an improper power source. This Amplifier is designed to be operated on 105 - 125 volt, 50 - 60 cycle alternating current ONLY. Check the voltage from the power lines to determine that it is not over 125 volts, and that the frequency of the current is either 50 or 60 cycles.

When ready to use power, plug the power cord into the electric outlet and move the switch to the ON position. Approximately one minute is required for the tubes to heat before the Amplifier is ready for use.

GENERAL

Amplifiers are carefully packed to prevent damage in shipment. However, upon receipt of the Amplifier, examine carefully to determine if there has been breakage of tubes or parts. If damage has occurred during shipment, the Transportation Company should be notified immediately, and a claim placed.

TUBES

Check tubes for proper positioning before placing the Amplifier in operation. All tubes have been tested and proved satisfactory before shipment.

OPERATION OF MICROPHONE

The high gain and high fidelity characteristics of this Amplifier, permit the use of most of the popular high impedance microphones for public address work. The microphone should be plugged into the Number One jack and it is not recommended that other instruments be used in conjunction with the microphone.

When using a microphone it is important that the Number 280 or similar shielded plug be attached to the cord. The ordinary phone plug with bakelite or other non-shielded cover is not suitable because the leads from the microphone must be completely shielded. Otherwise, objectionable hum will result. Figure A illustrates the proper way to connect the plug to the microphone cable.

To use the microphone, insert the plug in the Number One jack and advance the Volume control until a feedback squeal or howl is produced on the loudspeaker. Reduce the volume control to just below the feedback point. This setting will vary considerably, depending upon the size of the room, its acoustical properties and the distance between the microphone and loudspeaker. Feedback is the limiting factor in all public address installations and is caused when the level of sound from the loudspeakers is sufficient to actuate the microphone. The general rule when setting up the equipment is to place the loudspeaker as far from the microphone as possible.



Figure A

OPERATION OF INSTRUMENTS

This Amplifier is equipped with two input jacks for use with various types and styles of instruments and microphones. The input jacks are numbered 1. and 2. and when plugging in the instrument cords, they should be inserted in their respective jacks — that is, first instrument in the No. 1 jack, and second instrument in the No. 2 jack.

The gain for both jacks is adjusted by the control marked "Loudness". The tonal coloring can be varied over a wide range by use of the "Bass" and "Treble" tone controls.

MONITOR JACK

This convenient jack is provided for extending the usefullness of the amplifier. Some of it's many uses include: — Use in tape recording; Use in driving additional amplifiers, feeding into Public Address systems; Use with Hi-Fi amplifiers. For best results the Monitor Jack should be fed into a High-impedance circuit.

EXT. SPEAKER JACK

Provided for adding a wide dispersion of sound to the amplifier. An additional speaker may be plugged into this jack and, when the additional speaker is separated from this amplifier by several feet, a richer and fuller sound will result.

SERVICE

If the Amplifier is in need of servicing, consult a reliable radio man. The electrical diagram herein should be shown to the repairman to assist him in servicing the Amplifier.

FUSE

The fuse used in this Amplifier is a type 3AG Slo-Blo of one ampere rating.
DO NOT USE A FUSE OF HIGHER RATING.

GIBSON

DISCOVERER TREMOLO

MODEL GA-8T AMPLIFIER

INSTRUCTIONS

GIBSON INC., KALAMAZOO, MICHIGAN

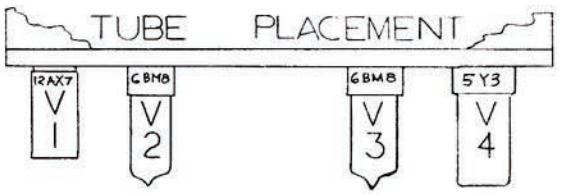

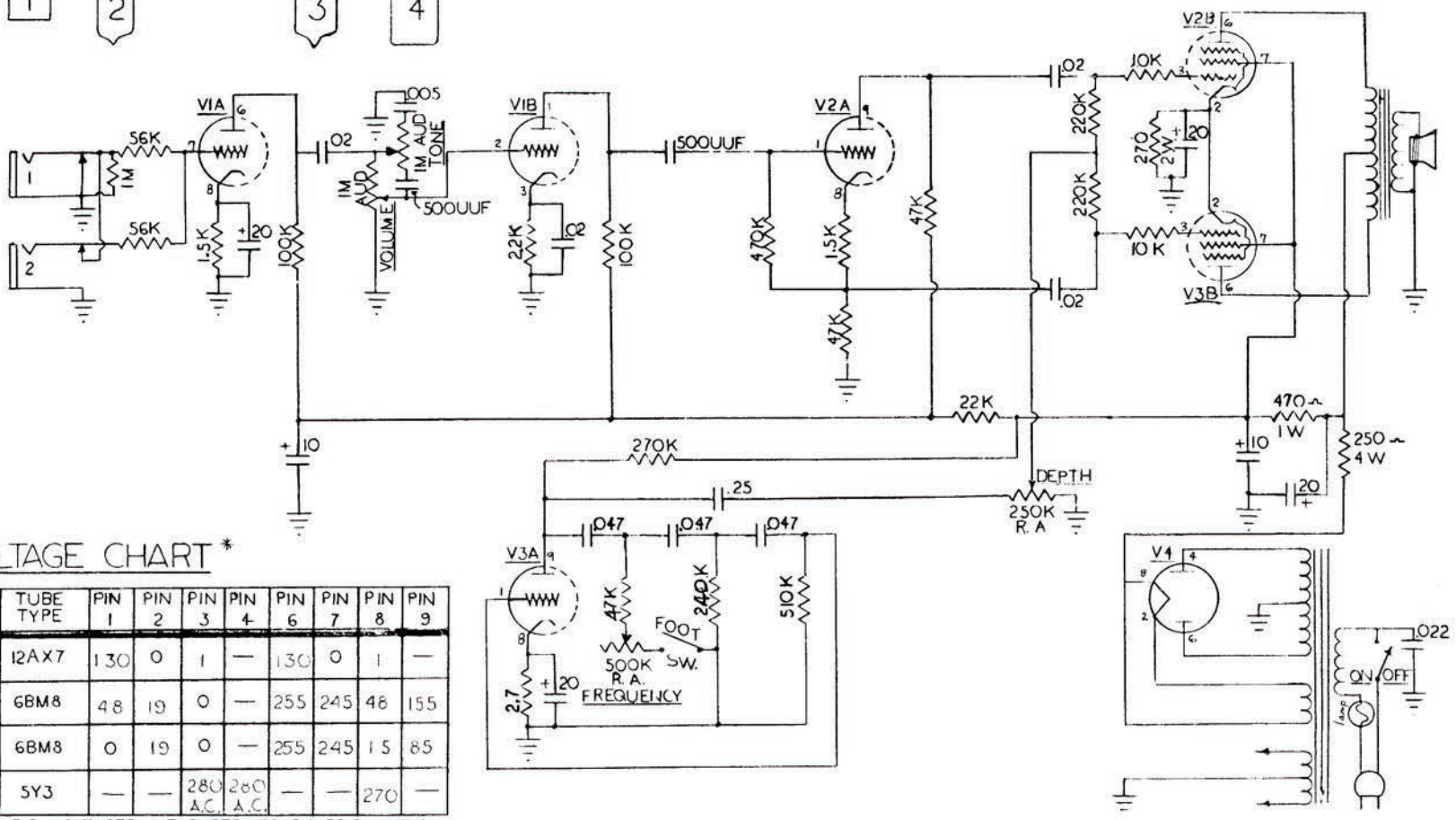

VOLTAGE CHART *

NO.	TUBE TYPE	PIN 1	PIN 2	PIN 3	PIN 4	PIN 6	PIN 7	PIN 8	PIN 9
V 1	12AX7	130	0	1	—	130	0	1	—
V 2	6BM8	48	19	0	—	255	245	48	155
V 3	6BM8	0	19	0	—	255	245	15	85
V 4	5Y3	—	—	280 A.C.	280 A.C.	—	—	270	—

*ALL D.C. VOLTAGES MEASURED TO CHASSIS WITH 20,000 OHM/VOLT METER.

GIBSON AMPLIFIER
MODEL GA-8T

OPERATION OF INSTRUMENTS

The GA-8T GIBSON Amplifier is equipped with two input jacks for use with various types and styles of instruments and microphones. The input jacks are numbered 1 and 2 and when plugging in the instrument cords, they should be inserted in their respective jacks; i.e.: 1st instrument in No. 1 jack, and 2nd instrument in No. 2 jack.

The gain for both jacks is adjusted by the control marked "Volume." The tonal coloring can be varied over a wide range by use of the combination bass and treble tone control.

OPERATION OF MICROPHONE

The high gain and high fidelity characteristics of the GA-8T GIBSON Amplifier permit the use of most of the popular high impedance microphones for public address work. The microphone should be plugged into the Number One jack and it is not recommended that other instruments be used in conjunction with the microphone.

When using a microphone it is important that the GIBSON 280 or similar shielded plug be attached to the cord. The ordinary phone plug with bakelite or other non-shielded cover is not suitable because the leads from the microphone must be completely shielded. Otherwise, objectionable hum will result. Figure A illustrates the proper way to connect the plug to the microphone cable.
To use the microphone, insert the plug in the Number One jack and advance the Volume control until a feedback squeal or howl is produced on the loudspeaker. Reduce the volume control to just below the feedback point. This setting will vary considerably, depending upon the size of the room, its acoustical properties and the distance between the microphone and loudspeaker. Feedback is the limiting factor in all public address installations and is caused when the level of sound from the loudspeakers is sufficient to actuate the microphone. The general rule when setting up the equipment is to place the loudspeaker as far from the microphone as possible.



Figure A

TREMOLO

The Tremolo effect is turned on and off by means of a Push Type Foot Switch. The Tremolo frequency of the Amplifier is controlled by the Variable Control marked "Frequency." The speeds have been carefully set to cover a wide range of Tremolo effects. The depth of the Tremolo is also variable being controlled by the "Depth" Control.

GENERAL

Amplifiers are carefully packed to prevent damage in shipment. However, upon receipt of the Amplifier, examine carefully to determine if there has been breakage of tubes or parts. If damage has occurred during shipment, the Transportation Company should be notified immediately, and a claim placed.

CAUTION

Damage to the Amplifier will result if it is connected to an improper power source. This Amplifier is designed to be operated on 105 - 125 volt, 50 - 60 cycle alternating current ONLY. Check the voltage from the power lines to determine that it is not over 125 volts, and that the frequency of the current is either 50 or 60 cycles.

When ready to use power, plug the power cord into the electric outlet and move the switch to the ON position. Approximately one minute is required for the tubes to heat before the Amplifier is ready for use.

TUBES

Check tubes for proper positioning before placing the Amplifier in operation. All tubes have been tested and proved satisfactory before shipment.

SERVICE

If the Amplifier is in need of servicing, consult a reliable radio man. The electrical diagram herein should be shown to the repairman to assist him in servicing the Amplifier.

FUSE

The fuse used in the GA-8T GIBSON Amplifier is a type 3AG of one ampere rating. DO NOT USE A FUSE OF HIGHER RATING.

GIBSON

MODEL GA-9 AMPLIFIER

INSTRUCTIONS

GIBSON INC., KALAMAZOO, MICH.

R^1	47K 1/2 WATT	R^8	200 OHM 7 WATT	C^5	10MFD 450W.V.
R^2	47K 1/2 WATT	R^9	470 OHM 1/2 WATT	C^6	10MFD 450W.V.
R^3	220K 1/2 WATT	R^{10}	47K 1 WATT	C^7	20MFD 450W.V.
R^4	1000 OHMS 1/2 WATT	C^1	20MFD 25 W.V.	T^1	OUTPUT TRANSFORMER
R^5	1 MEGOHM 1/2 WATT	C^2	.05MFD 600 W.V.	T^2	SPEAKER FIELD
R^6	220K 1/2 WATT	C^3	.05MFD 600W.V.	T^3	POWER TRANSFORMER
R^7	500K VOLUME CONTROL	C^4	20MFD 25 W.V.	F^1	FUSE 2AMP TYPE 3AG

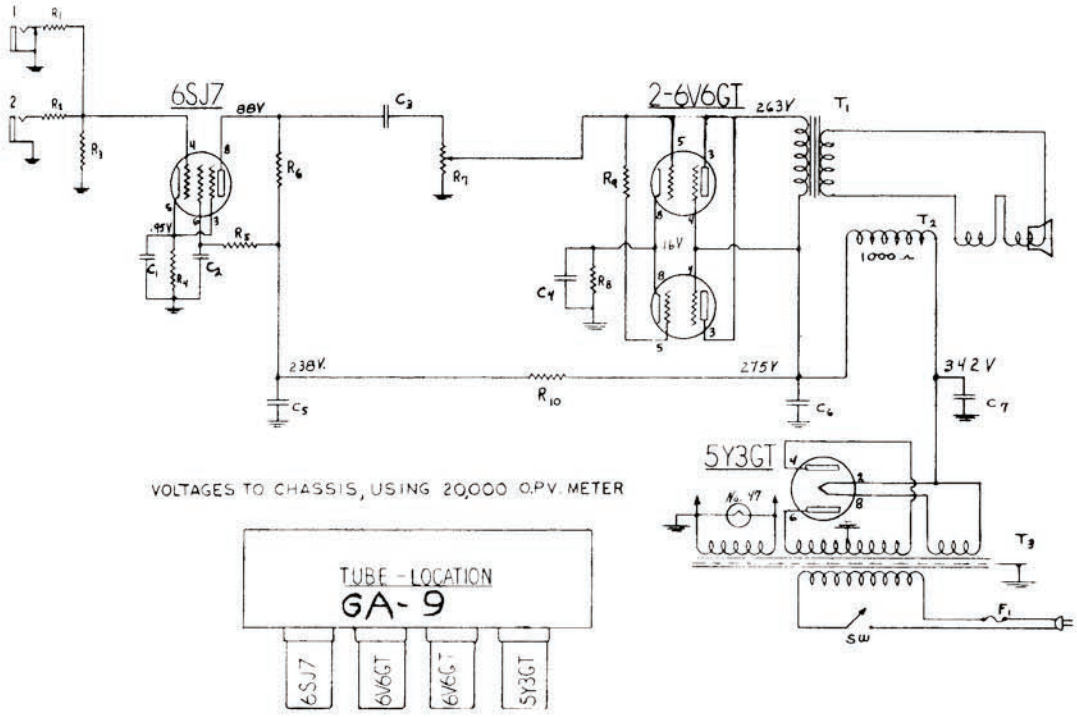

OPERATION OF INSTRUMENTS

When either one or two instruments are plugged into the sockets marked INSTRUMENTS, two stages of amplification are used, the total gain being controlled by the volume control marked INSTRUMENTS.

GENERAL

Amplifiers are carefully packed to prevent damage in shipment. However, upon receipt of the amplifier, look it over carefully to make sure there has been no breakage of tubes or parts. If you find that damage has occurred during shipment, we suggest the Transportation Company be called immediately, and a claim placed.

CAUTION

Damage to the amplifier will result if it is connected to an improper power source. This amplifier is designed to be operated on 105-125 volt, 50-60 cycle alternating current only. Make sure the voltage from the power lines is not over 125, and that the frequency of the current is either 50 or 60 cycles. When ready to turn on power, plug the power cord into the electric outlet and turn on the switch. Wait approximately one minute for the tubes to heat, and the amplifier is ready for use.

TUBES

Be sure tubes are in their proper positions before placing the amplifier in operation. All tubes have been tested and proved satisfactory before shipment.

SERVICE

If the amplifier is in need of servicing, we suggest it be taken to a reliable radio man. The electrical diagram attached should be shown the repairman to assist him in servicing the amplifier.

==========

The fuse used in the GA-9 amplifier is a type AG of two ampere rating. DO NOT USE FUSES OF HIGHER RATING.

GIBSON

"TITAN"
MODEL GA-14 AMPLIFIER

INSTRUCTIONS

GIBSON INC., KALAMAZOO, MICHIGAN

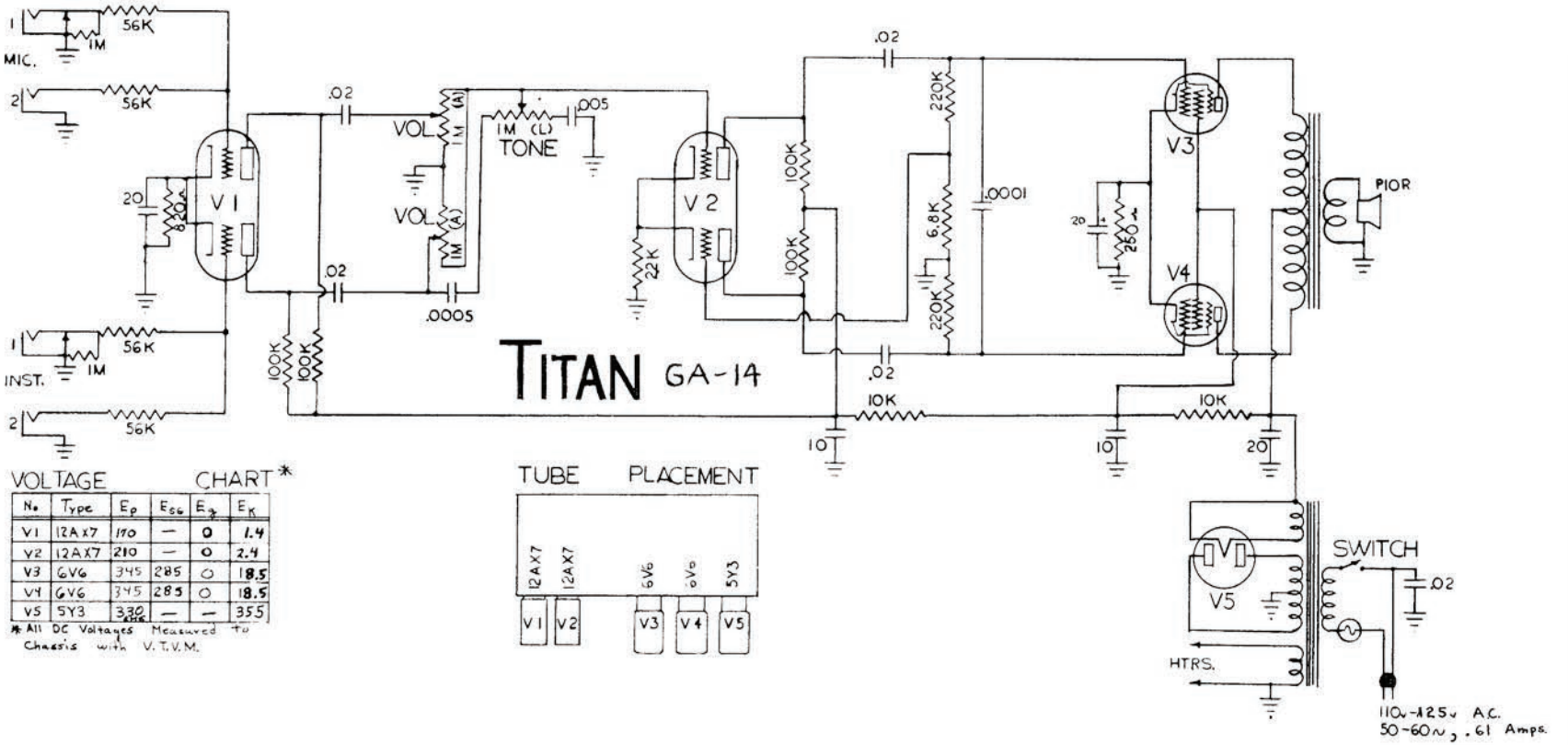

VOLTAGE CHART*

No.	Type	E_p	E_{SG}	E_g	E_K
V1	12AX7	170	—	0	1.4
V2	12AX7	210	—	0	2.4
V3	6V6	345	285	0	18.5
V4	6V6	345	285	0	18.5
V5	5Y3	330	—	—	355

* All DC Voltages Measured to Chassis with V.T.V.M.

TUBE PLACEMENT

GIBSON "TITAN"
MODEL GA-14 AMPLIFIER

OPERATION OF INSTRUMENT

The jacks marked No. 1 and 2 may be used with any of the many Gibson Electrical Instruments, or High Impedance Microphones, (see Operation of Microphones below.). For best results when operating a microphone and instrument at the same time, always place the microphone in the opposite channel from the instrument. Two microphones may be used in the same channel if they are of the same type or have the same characteristics.

The correct procedure for setting the Amplifier Volume Control is as follows: Turn the Instrument Volume Control completely on. Pick the strings forcefully and then set the Amplifier Volume Control at a point where no distortion occurs. When using instruments in the opposite channel, the Volume Controls should be adjusted in this same manner.

The tone control circuit for this Amplifier has been designed to give the player an extremely wide range of tonal coloring.



FIGURE A

OPERATION OF MICROPHONE

Because of the high power output, high gain and high fidelity characteristics of the GIBSON GA-14 AMPLIFIER it makes an exceptionally fine public address system when used with either the crystal, dynamic or velocity types of microphones.

While the amplifier will operate very well with any of the crystal, medium or high impedance dynamic or velocity (ribbon) microphones, it is recommended that a GIBSON Dealer be consulted before investing in a microphone. Authorized Gibson Dealers can supply a microphone which has been selected and matched to the amplifier, thus insuring the most faithful reproduction of voice and music.

When using a microphone it is important that the GIBSON 280 or similar shielded plug be attached to the cord. The ordinary phone plug with bakelite or other non-shielded cover is not suitable because the leads from the microphone must be completely shielded. Otherwise, objectionable hum will result. Figure A illustrates the proper way to connect the plug to the microphone cable. To use the microphone, insert the plug in the "Microphone" jack and advance the Microphone volume control until a feedback squeal or howl is produced on the loudspeaker. Reduce the volume control to just below the feedback point. This setting will vary considerably, depending upon the size of the room, its acoustical properties and the distance between the microphone and loudspeaker. Feedback is the limiting factor in all public address installations and is caused when the level of sound from the loudspeakers is sufficient to actuate the microphone. The general rule when setting up the equipment is to place the loudspeaker as far from the microphone as possible.

GENERAL

Amplifiers are carefully packed to prevent damage in shipment. However, upon receipt of the Amplifier, examine carefully to determine if there has been breakage of tubes or parts. If damage has occurred during shipment, the Transportation Company should be notified immediately, and a claim placed.

CAUTION

Damage to the Amplifier will result if it is connected to an improper power source. This Amplifier is designed to be operated on 105 - 125 volt, 50 - 60 cycle alternating current ONLY. Check the voltage from the power lines to determine that it is not over 125 volts, and that the frequency of the current is either 50 or 60 cycles.

When ready to use power, plug the power cord into the electric outlet and move the switch to the ON position. Approximately one minute is required for the tubes to heat before the Amplifier is ready for use.

TUBES

Check tubes for proper positioning before placing the Amplifier in operation. All tubes have been tested and proved satisfactory before shipment.

SERVICE

If the Amplifier is in need of servicing, consult a reliable radio man. The electrical diagram herein should be shown to the repairman to assist him in servicing the Amplifier.

FUSE

The fuse used in the GIBSON GA-14 AMPLIFIER is a type 3 AG of one ampere rating. DO NOT USE A FUSE OF HIGHER RATING.

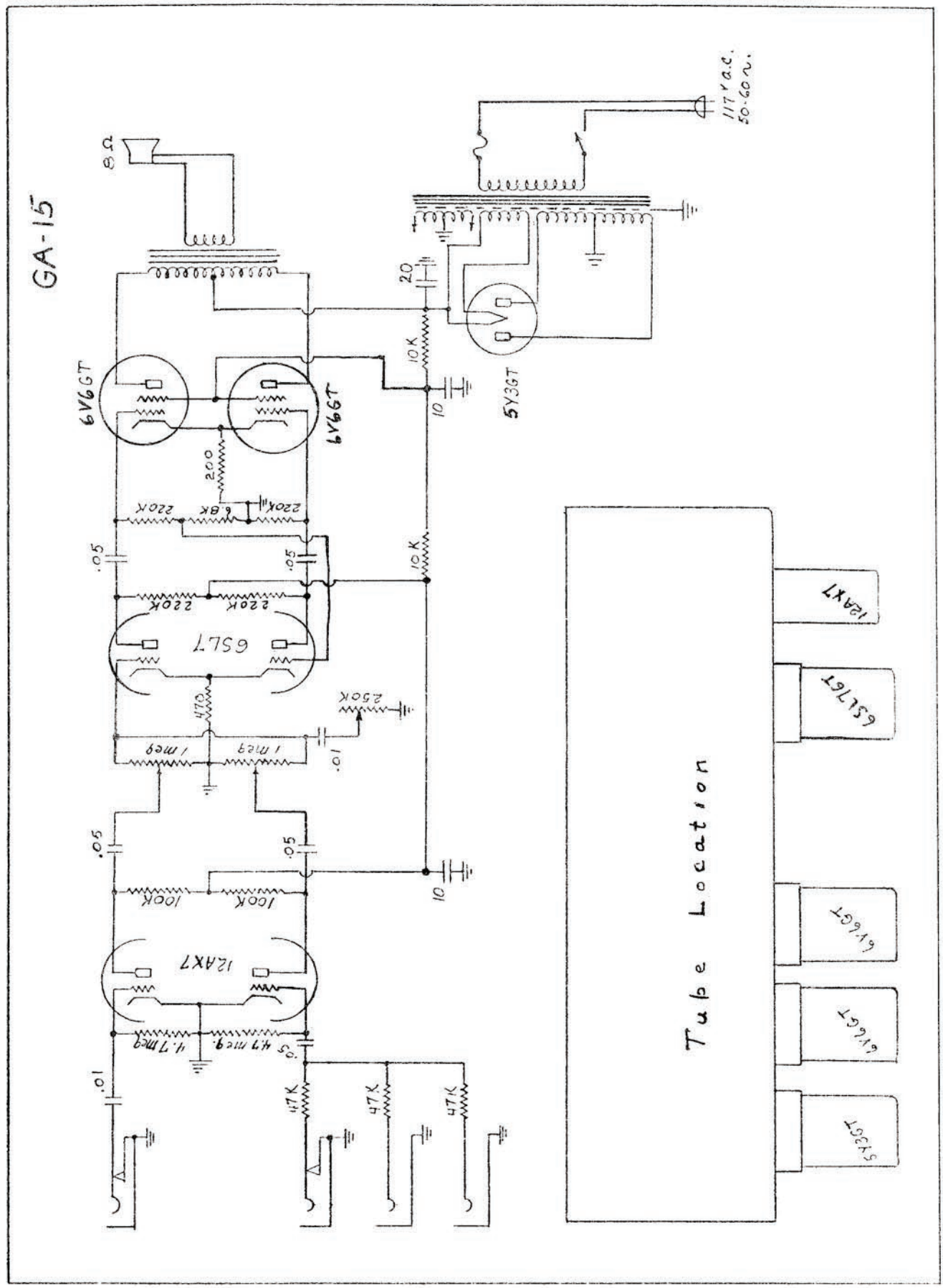
GA-15
8Ω
117 v a.c.
50-60 ~.
20
10K
10
5Y3GT
6V6GT
6V6GT
200
220K
6.8K
220K
.05
.05
10K
220K
220K
6SL7
470
250K
1 meg
1 meg
.01
.05
.05
10
100K
100K
12AX7
4.7 meg
4.7 meg
.05
.01
47K
47K
47K
Tube Location
12AX7
6SL7GT
6V6GT
6V6GT
5Y3GT

Bell 15RV reverb

MODEL BA-15RV AMPLIFIER

INSTRUCTIONS

PRODUCT OF ELECTRONICS DIVISION, GIBSON INC., KALAMAZOO, MICH.

BA-15RV

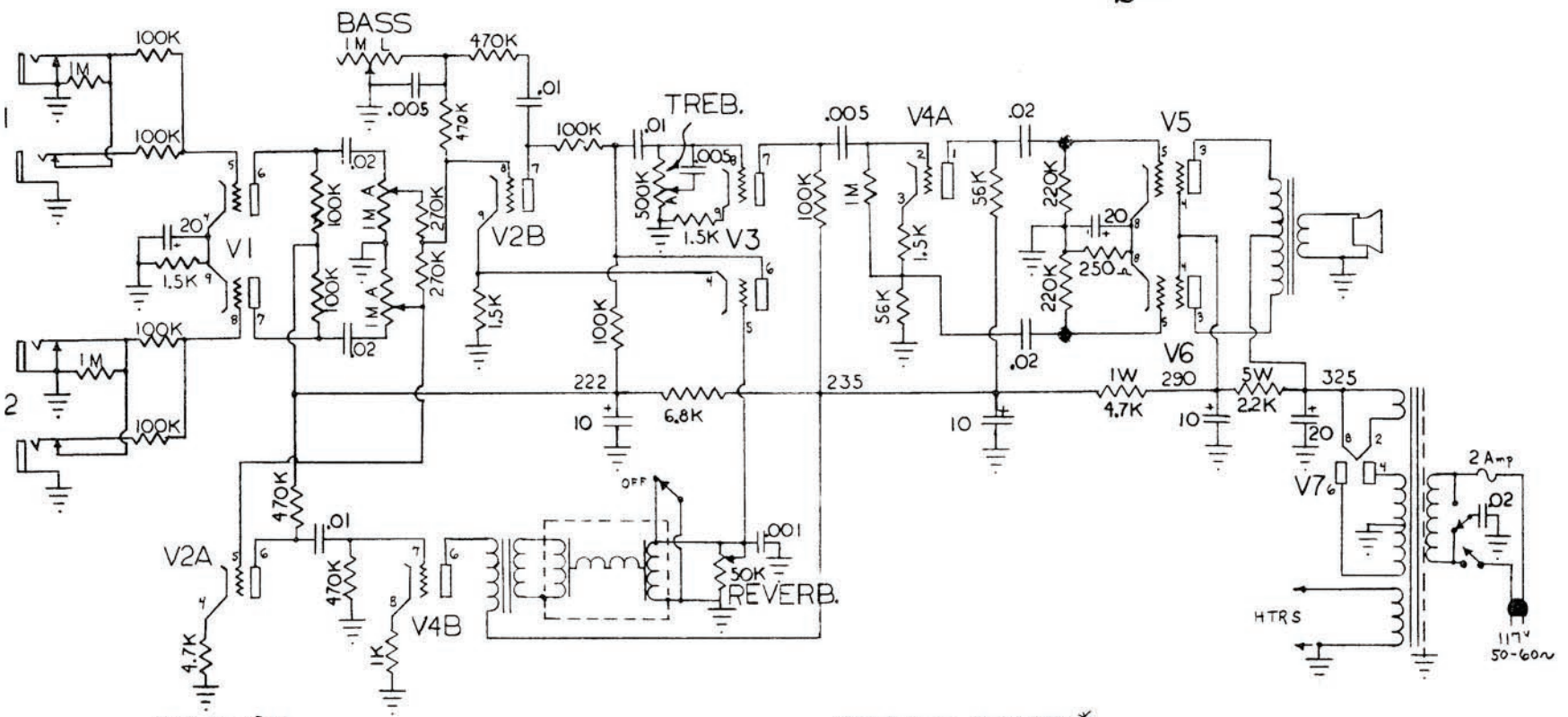

BA 15-RV TUBE LOCATION

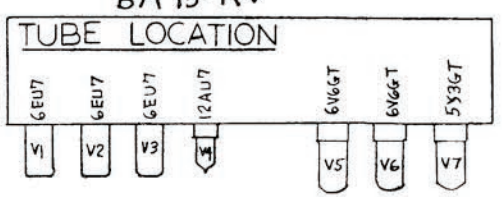

VOLTAGE CHART *

NR.	TYPE	PIN 1	PIN 2	PIN 3	PIN 4	PIN 5	PIN 6	PIN 7	PIN 8	PIN 9	B+
1	6EU7	FIL	FIL	—	1.5	0	170	170	0	1.5	222
2	6EU7	FIL	FIL	—	1.15	0	96	137	0	1.2	222
3	6EU7	FIL	FIL	—	1.2	0	136	155	0	1.25	222
4	12AU7A	145	83	89	FIL	FIL	222	0	8	FIL	235
5	6V6GT	—	FIL	315	290	0	—	FIL	18	—	325
6	6V6GT	GND	FIL	315	290	0	—	FIL	18	—	325
7	5Y3GT	—	FIL	—	320 AC	—	320 AC	—	325	—	—

*ALL DC VOLTAGES MEASURED TO CHASSIS WITH 11 MEG./VOLT V.T.V.M.

MODEL BA-15RV AMPLIFIER

REVERBERATION

An exciting new dimension of sound providing Concert Hall effects in any size room.

The Reverberation unit is mounted vertically inside the left end of the amplifier case. The Reverberation mechanism is provided with a locking device which provides protection for the mechanism during transportation. Before playing the Amplifier, unlock the Reverberation unit by pressing the red lever down until it is in a vertical position. An Off-On foot switch with 15 feet of cable is provided for remote control of the Reverberation effect. A variable control on the Amplifier panel allows the reverberation intensity to be controlled from zero or off, to louder than the original signal.

IMPORTANT:—Always lock the Reverberation mechanism by raising the red lever until it stops, (horizontal position) before transporting the amplifier. Failure to do so may cause severe damage to the Reverberation mechanism.

OPERATION OF INSTRUMENT OR MICROPHONE

Always use jack marked "1" first.

When one or two instruments are plugged into the jacks marked "Instruments," five stages of amplification are used. The total gain of both being set with the control marked "Instruments."

The jacks marked "Microphone" may also be used with any Electrical Instruments. When used this way, a careful setting of the volume control marked "Microphone" must be made to avoid overload and consequent distortion. This adjustment can easily be made by turning the Volume Control on the guitar or other instrument completely on, and setting the Microphone Control at a point where no distortion occurs when the strings are struck with maximum force. By utilizing the Microphone jacks in this way, two or more instruments can be plugged in, making a total of four electrical instruments which may be used and blended.

The tone control circuit for this Amplifier has been designed to give the player an extremely wide range of tonal coloring.



Figure A

OPERATION OF MICROPHONE

Because of the high power output, high gain and high fidelity characteristics of the BELL BA-15RV AMPLIFIER it makes an exceptionally fine public address system when used with either the

While the amplifier will operate very well with any of the crystal, medium or high impedance dynamic or velocity (ribbon) microphones, it is recommended that a BELL Dealer be consulted before investing in a microphone. Authorized Bell Dealers can supply a microphone which has been selected and matched to the amplifier, thus insuring the most faithful reproduction of voice and music.

When using a microphone it is important that a number 280 or similar shielded plug be attached to the cord. The ordinary phone plug with bakelite or other non-shielded cover is not suitable because the leads from the microphone must be completely shielded. Otherwise, objectionable hum will result. Figure A illustrates the proper way to connect the plug to the microphone cable. To use the microphone, insert the plug in the "Microphone" jack and advance the Microphone volume control until a feedback squeal or howl is produced on the loudspeaker. Reduce the volume control to just below the feedback point. This setting will vary considerably, depending upon the size of the room, its acoustical properties and the distance between the microphone and loudspeaker. Feedback is the limiting factor in all public address installations and is caused when the level of sound from the loudspeakers is sufficient to actuate the microphone. The general rule when setting up the equipment is to place the loudspeaker as far from the microphone as possible.

If the Microphone jacks are not in use, turn the Microphone volume control completely off.

Gibson

EXPLORER

MODEL GA-15RVT AMPLIFIER

INSTRUCTIONS

PRODUCT OF

Gibson Electronics

KALAMAZOO, MICHIGAN

IMPORTANT — READ CAREFULLY BEFORE USE

CAUTION

The Reverb Unit has been carefully constructed. It is, however, a delicate electronic device. Treat it with the same care and respect given a TV set.

Avoid dropping, sudden jolts, or rough handling and it will give excellent service. This beautifully musical Reverberation effect is not to be confused with the repeating signal produced by the mechanical tape recorder style of echo units.

UNPACKING

Amplifiers are carefully packed to prevent damage in shipment. However, upon receipt of the amplifier, examine carefully to determine if there has been breakage of tubes or parts. If damage has occurred during shipment, call the Transportation Company immediately, and place a claim.

TUBES

Make certain all tubes are seated firmly into their respective sockets. Each tube is labeled for proper replacement should any tube be out of its socket. Be especially careful when inserting tubes to see that the pins on the tube are correctly aligned with the holes in the socket before pushing into place. Do not twist tube — push tube straight into socket. It is advisable to check tubes from time to time depending on amount of use and excellence of performance. *Be sure tubes are always returned to proper sockets and seated firmly.*

REVERB POWER UNIT SET UP INSTRUCTIONS

CAUTION

Damage to the amplifier will result if it is connected to an improper power source. This amplifier is designed to be operated on 105-125 volt, 50-60 cycle alternating current only. The voltage from the power lines should not exceed 125, and the frequency of the current should be either 50 or 60 cycles. When ready to use amplifier, insert the plug on the power cord into the electric outlet and move switch to "on." After approximately one minute for the tubes to heat, the amplifier is ready for use.

The Reverberation Unit must always be placed on a solid non-vibrating surface or footing when in operation.

Any sudden shock, jolt, or wiggle, when in use, will cause undesirable noise. The resultant clatter of an inadvertant shake or bump is annoying but not necessarily harmful. This delicate sensitivity to shock and vibration is a normal characteristic of the device.

No problem will be encountered while the unit is connected if supporting surface is solid and unit is not moved about. To avoid the unwanted noise, turn the reverberation unit off by pressing the foot switch.

FUSE

The fuse used in this Amplifier is a type 3AG of 1½ ampere rating.
DO NOT USE A FUSE OF HIGHER RATING.

TREMOLO

The Tremolo effect adds another dimension to the Reverberation effect. It can be used either with or without reverberation at the players discretion. The Tremolo is turned on or off by the use of the foot switch. The Tremolo Frequency Range has been carefully set to cover a wide range of Tremolo effects.

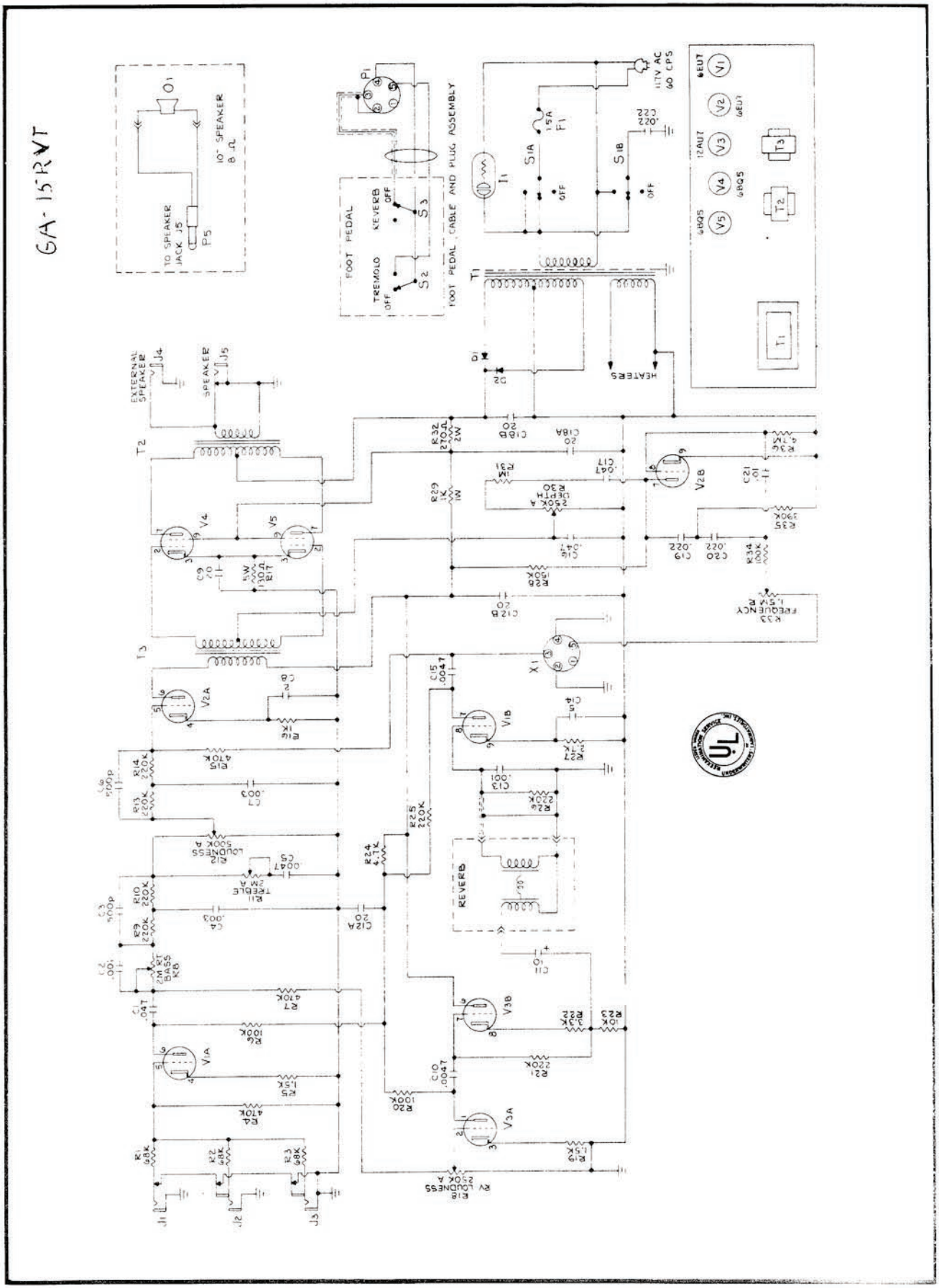
GA-15RVT
TO SPEAKER JACK J5
P5
O1
10" SPEAKER 8 Ω
FOOT PEDAL
TREMOLO
REVERB
OFF
S2
S3
P1
FOOT PEDAL, CABLE AND PLUG ASSEMBLY
117V AC 60 CPS
S1A
S1B
F1
I1
T1
T2
T3
EXTERNAL SPEAKER
SPEAKER
J4
J5
HEATERS
D1
D2
V1
V2
V3
V4
V5
6EU7
12AU7
6BQ5
V1A
V1B
V2A
V2B
V3A
V3B
X1
REVERB
R1 68K
R2 68K
R3 68K
R4 470K
R5 1.5K
R6 100K
R7 470K
R8 2M RT BASS
R9 220K
R10 220K
R11 TREBLE 2M A
R12 LOUDNESS 500K A
R13 220K
R14 220K
R15 470K
R16 1K
R17 130Ω
R18 RV LOUDNESS 250K A
R19 1.5K
R20 100K
R21 220K
R22 3.3K
R23 10K
R24 4.7K
R25 220K
R26 220K
R27 2.7K
R28 150K
R29 1K 1W
R30 250K A DEPTH
R31 1M
R32 270Ω 2W
R33 FREQUENCY 1.5M R
R34 100K
R35 390K
R36 4.7M
C1 .047
C2 .001
C3 500p
C4 .003
C5 .0047
C6 500p
C7 .003
C8 2
C9 20
C10 .0047
C11 10
C12A 20
C12B 20
C13 .001
C14 5
C15 .0047
C16 .047
C17 .047
C18A 20
C18B 20
C19 .022
C20 .022
C21 .01
C22 .022
J1
J2
J3

Maestro

VISCOUNT AMPLIFIER

GA-16T

INSTRUCTIONS

PRODUCT OF ELECTRONICS DIVISION, GIBSON INC., KALAMAZOO, MICH.

859-5C-H.P.Co.

GA-16T

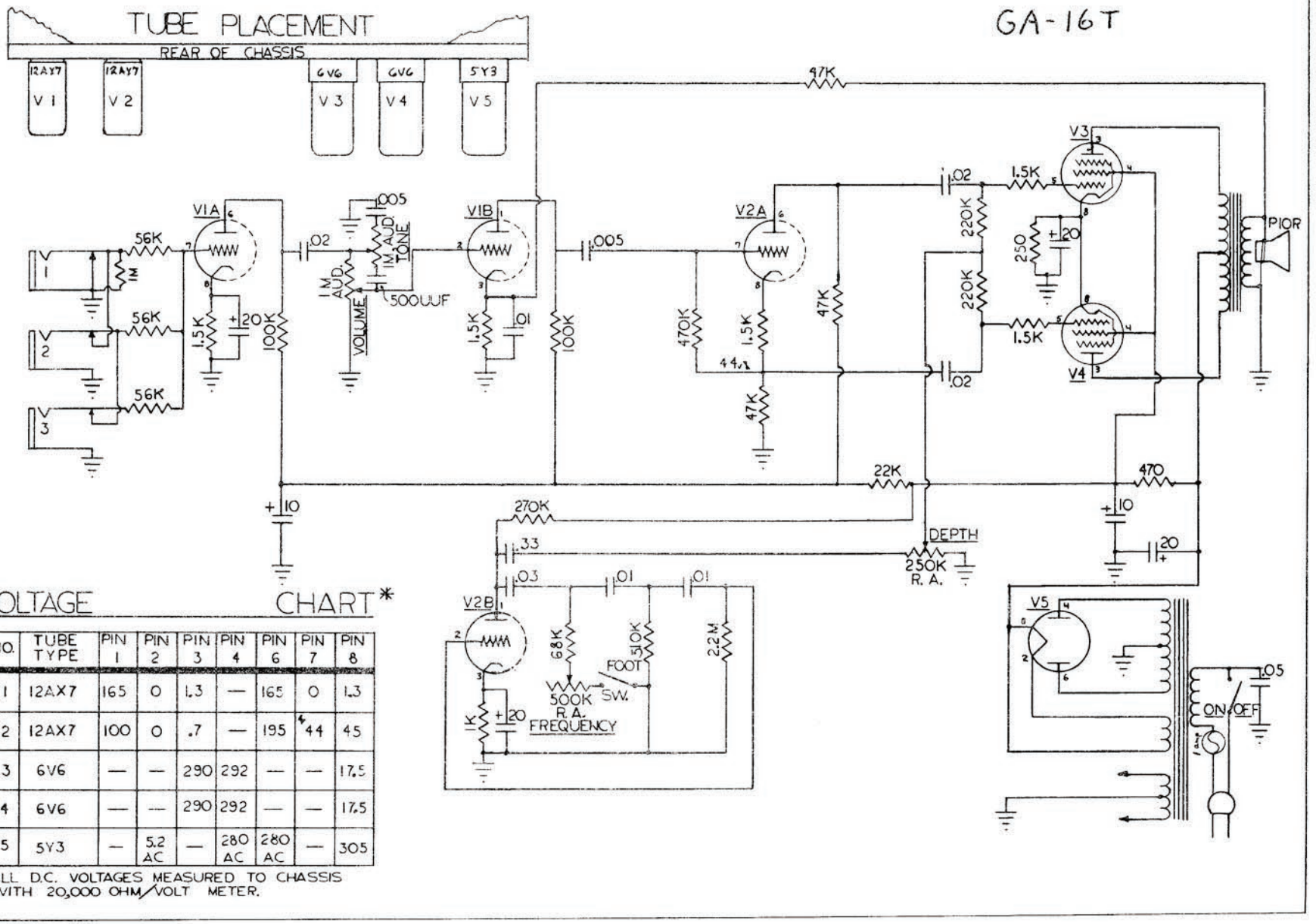

VOLTAGE CHART*

NO.	TUBE TYPE	PIN 1	PIN 2	PIN 3	PIN 4	PIN 6	PIN 7	PIN 8
V 1	12AX7	165	0	1.3	—	165	0	1.3
V 2	12AX7	100	0	.7	—	195	44	45
V 3	6V6	—	—	290	292	—	—	17.5
V 4	6V6	—	—	290	292	—	—	17.5
V 5	5Y3	—	5.2 AC	—	280 AC	280 AC	—	305

*ALL D.C. VOLTAGES MEASURED TO CHASSIS WITH 20,000 OHM/VOLT METER.

MAESTRO VISCOUNT AMPLIFIER

OPERATION OF INSTRUMENTS

The Maestro Viscount Amplifier is equipped with three input jacks for use with various types and styles of instruments and microphones. The input jacks are numbered 1, 2, and 3, and when plugging in the instrument cords, they should be inserted in their respective jacks; i.e.: 1st instrument in No. 1 jack, 2nd instrument in No. 2 jack, and 3rd instrument in the No. 3 jack.

The gain for all three jacks is adjusted by the control marked "Volume." The tonal coloring can be varied over a wide range by use of the combination bass and treble tone control.

OPERATION OF MICROPHONE

The high gain and high fidelity characteristics of the Maestro Viscount Amplifier permit the use of most of the popular high impedance microphones for public address work. The microphone should be plugged into the Number One jack and it is not recommended that other instruments be used in conjunction with the microphone.

When using a microphone it is important that the Maestro 280 or similar shielded plug be attached to the cord. The ordinary phone plug with bakelite or other non-shielded cover is not suitable because the leads from the microphone must be completely shielded. Otherwise, objectionable hum will result. Figure A illustrates the proper way to connect the plug to the microphone cable.
To use the microphone, insert the plug in the Number One jack and advance the Volume control until a feedback squeal or howl is produced on the loudspeaker. Reduce the volume control to just below the feedback point. This setting will vary considerably, depending upon the size of the room, its acoustical properties and the distance between the microphone and loudspeaker. Feedback is the limiting factor in all public address installations and is caused when the level of sound from the loudspeakers is sufficient to actuate the microphone. The general rule when setting up the equipment is to place the loudspeaker as far from the microphone as possible.



Figure A

TREMOLO

The Tremolo effect is turned on and off by means of a Push Type Foot Switch. The Tremolo frequency of the Amplifier is controlled by the Variable Control marked "Frequency." The speeds have been carefully set to cover a wide range of Tremolo effects. The depth of the Tremolo is also variable being controlled by the "Depth" Control.

GENERAL

Amplifiers are carefully packed to prevent damage in shipment. However, upon receipt of the Amplifier, examine carefully to determine if there has been breakage of tubes or parts. If damage has occurred during shipment, the Transportation Company should be notified immediately, and a claim placed.

CAUTION

Damage to the Amplifier will result if it is connected to an improper power source. This Amplifier is designed to be operated on 105 - 125 volt, 50 - 60 cycle alternating current ONLY. Check the voltage from the power lines to determine that it is not over 125 volts, and that the frequency of the current is either 50 or 60 cycles.

When ready to use power, plug the power cord into the electric outlet and move the switch to the ON position. Approximately one minute is required for the tubes to heat before the Amplifier is ready for use.

TUBES

Check tubes for proper positioning before placing the Amplifier in operation. All tubes have been tested and proved satisfactory before shipment.

SERVICE

If the Amplifier is in need of servicing, consult a reliable radio man. The electrical diagram herein should be shown to the repairman to assist him in servicing the Amplifier.

FUSE

The fuse used in the Maestro Viscount Amplifier is a type 3AG of one ampere rating. DO NOT USE A FUSE OF HIGHER RATING.

Gibson

SCOUT
MODEL GA-17RVT AMPLIFIER

INSTRUCTIONS

PRODUCT OF

Gibson Electronics

KALAMAZOO, MICHIGAN

IMPORTANT — READ CAREFULLY BEFORE USE

CAUTION

The Reverb Unit has been carefully constructed. It is, however, a delicate electronic device. Treat it with the same care and respect given a TV set.

Avoid dropping, sudden jolts, or rough handling and it will give excellent service. This beautifully musical Reverberation effect is not to be confused with the repeating signal produced by the mechanical tape recorder style of echo units.

UNPACKING

Amplifiers are carefully packed to prevent damage in shipment. However, upon receipt of the amplifier, examine carefully to determine if there has been breakage of tubes or parts. If damage has occurred during shipment, call the Transportation Company immediately, and place a claim.

TUBES

Make certain all tubes are seated firmly into their respective sockets. Each tube is labeled for proper replacement should any tube be out of its socket. Be especially careful when inserting tubes to see that the pins on the tube are correctly aligned with the holes in the socket before pushing into place. Do not twist tube — push tube straight into socket. It is advisable to check tubes from time to time depending on amount of use and excellence of performance. *Be sure tubes are always returned to proper sockets and seated firmly.*

REVERB POWER UNIT SET UP INSTRUCTIONS

CAUTION

Damage to the amplifier will result if it is connected to an improper power source. This amplifier is designed to be operated on 105-125 volt, 50-60 cycle alternating current only. The voltage from the power lines should not exceed 125, and the frequency of the current should be either 50 or 60 cycles. When ready to use amplifier, insert the plug on the power cord into the electric outlet and move switch to "on." After approximately one minute for the tubes to heat, the amplifier is ready for use.

The Reverberation Unit must always be placed on a solid non-vibrating surface or footing when in operation.

Any sudden shock, jolt, or wiggle, when in use, will cause undesirable noise. The resultant clatter of an inadvertant shake or bump is annoying but not necessarily harmful. This delicate sensitivity to shock and vibration is a normal characteristic of the device.

No problem will be encountered while the unit is connected if supporting surface is solid and unit is not moved about. To avoid the unwanted noise, turn the reverberation unit off by pressing the foot switch.

FUSE

The fuse used in this Amplifier is a type 3AG Slo-Blo of one ampere rating.
DO NOT USE A FUSE OF HIGHER RATING.

TREMOLO

The Tremolo effect adds another dimension to the Reverberation effect. It can be used either with or without reverberation at the players discretion. The Tremolo is turned on or off by the use of the foot switch. The Tremolo Frequency Range has been carefully set to cover a wide range of Tremolo effects.

OPERATION OF MICROPHONE

The high gain and high fidelity characteristics of this Amplifier, permit the use of most of the popular high impedance microphones for public address work. The microphone should be plugged into the Number One jack and it is not recommended that other instruments be used in conjunction with the microphone.

When using a microphone it is important that the Number 280 or similar shielded plug be attached to the cord. The ordinary phone plug with bakelite or other non-shielded cover is not suitable because the leads from the microphone must be completely shielded. Otherwise, objectionable hum will result. Figure A illustrates the proper way to connect the plug to the microphone cable.
To use the microphone, insert the plug in the Number One jack and advance the Loudness control until a feedback squeal or howl is produced on the loudspeaker. Reduce the Loudness control to just below the feedback point. This setting will vary considerably, depending upon the size of the room, its acoustical properties and the distance between the microphone and loudspeaker. Feedback is the limiting factor in all public address installations and is caused when the level of sound from the loudspeakers is sufficient to actuate the microphone. The general rule when setting up the equipment is to place the loudspeaker as far from the microphone as possible.



Figure A

SERVICE

If the amplifier is in need of servicing, it should be taken to a reliable radio man. The electrical diagram in this folder should be shown the repairman to assist him in servicing the amplifier.

GA17RVT
SCOUT

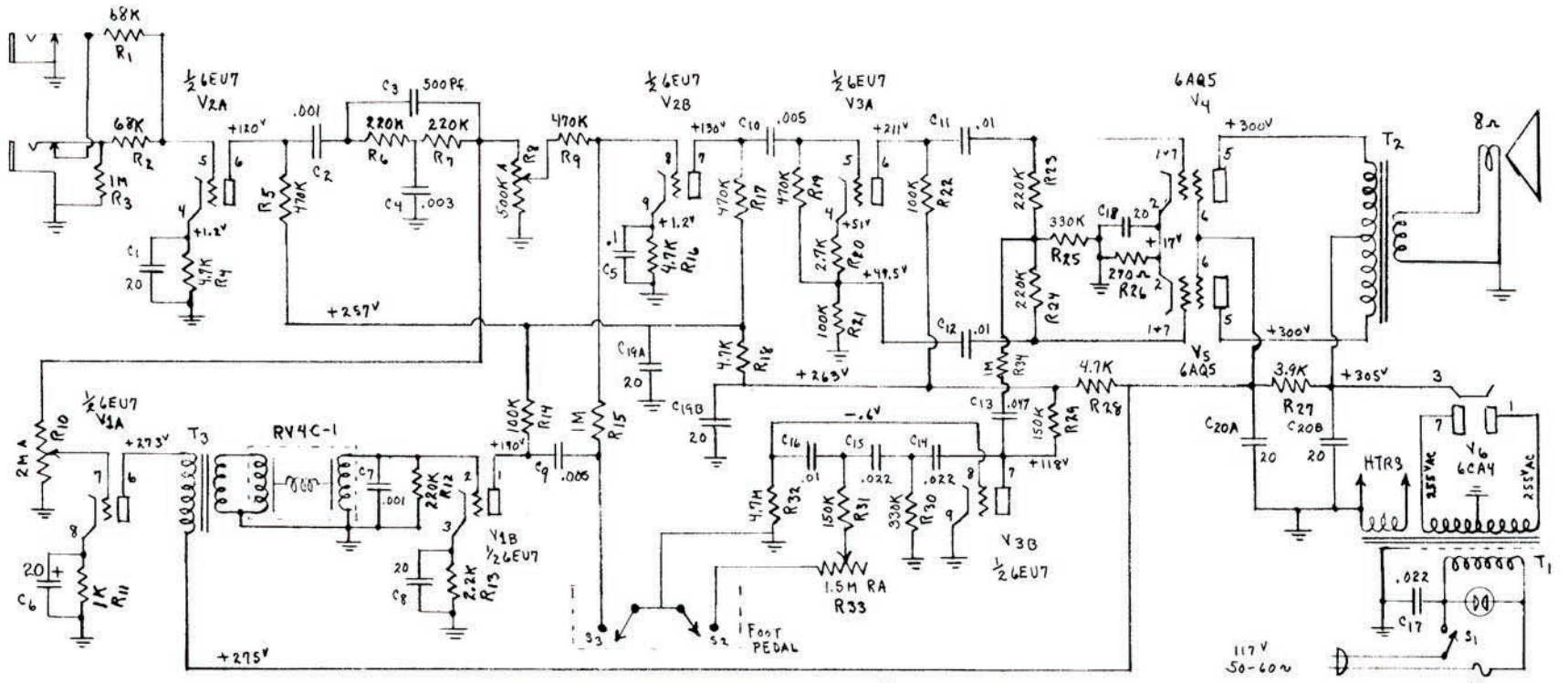

VOLTAGES TO CHASSIS WITH VTVM (11 meg)

T1 POWER TRANSFORMER TF 8A-P
T2 OUTPUT " TF 18-01
T3 DRIVER " TF E6400
SPEAKER 8Ω, 10" S20003
R8 VOLUME CONTROL 500K AUDIO TAPER
R10 REVERB VOLUME 2MEG " "
R33 TREMOLO FREQUENCY 1.5M REV. AUDIO
S2, S3 SPST PUSH PUSH SW.
REVERBERATION UNIT RV4C-1

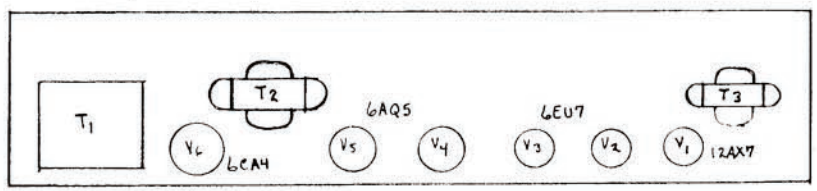

GIBSON

Explorer

MODEL GA-18T AMPLIFIER

INSTRUCTIONS

PRODUCT OF

Gibson Electronics

KALAMAZOO, MICHIGAN

INSTRUCTIONS

CAUTION

Damage to the Amplifier will result if it is connected to an improper power source. This Amplifier is designed to be operated on 105 - 125 volt, 50 - 60 cycle alternating current ONLY. Check the voltage from the power lines to determine that it is not over 125 volts, and that the frequency of the current is either 50 or 60 cycles.

When ready to use power, plug the power cord into the electric outlet and move the switch to the ON position. Approximately one minute is required for the tubes to heat before the Amplifier is ready for use.

GENERAL

Amplifiers are carefully packed to prevent damage in shipment. However, upon receipt of the Amplifier, examine carefully to determine if there has been breakage of tubes or parts. If damage has occurred during shipment, the Transportation Company should be notified immediately, and a claim placed.

TUBES

Check tubes for proper positioning before placing the Amplifier in operation. All tubes have been tested and proved satisfactory before shipment.

OPERATION OF MICROPHONE

The high gain and high fidelity characteristics of this Amplifier permit the use of most of the popular high impedance microphones for public address work. The microphone should be plugged into the Number One jack and it is not recommended that other instruments be used in conjunction with the microphone.

When using a microphone it is important that the Number 280 or similar shielded plug be attached to the cord. The ordinary phone plug with bakelite or other non-shielded cover is not suitable because the leads from the microphone must be completely shielded. Otherwise, objectionable hum will result. Figure A illustrates the proper way to connect the plug to the microphone cable.

To use the microphone, insert the plug in the Number One jack and advance the Volume control until a feedback squeal or howl is produced on the loudspeaker. Reduce the volume control to just below the feedback point. This setting will vary considerably, depending upon the size of the room, its acoustical properties and the distance between the microphone and loudspeaker. Feedback is the limiting factor in all public address installations and is caused when the level of sound from the loudspeakers is sufficient to actuate the microphone. The general rule when setting up the equipment is to place the loudspeaker as far from the microphone as possible.



Figure A

OPERATION OF INSTRUMENTS

This Amplifier is equipped with three input jacks for use with various types and styles of instruments and microphones. The input jacks are numbered 1., 2. and 3. and when plugging in the instrument cords, they should be inserted in their respective jacks — that is, first instrument in the No. 1 jack, second instrument in the No. 2 jack and the third instrument in the No. 3 jack.

The gain for all three jacks is adjusted by the control marked "Loudness". The tonal coloring can be varied over a wide range by use of the "Bass" and "Treble" tone controls.

MONITOR JACK

This convenient jack is provided for extending the usefullness of the amplifier. Some of it's many uses include: — Use in tape recording; Use in driving additional amplifiers, feeding into Public Address systems; Use with Hi-Fi amplifiers. For best results the Monitor Jack should be fed into a High-impedance circuit.

ECHO SPEAKER JACK

Provided for adding a wide dispersion of sound to the amplifier. An additional speaker may be plugged into this jack and, when the additional speaker is separated from this amplifier by several feet, a richer and fuller sound will result.

TREMOLO

The Tremolo effect is turned on and off by means of a Push Type Foot Switch. The Tremolo frequency of the Amplifier is controlled by the Variable Control marked "Frequency." The speeds have been carefully set to cover a wide range of Tremolo effects. The depth of the Tremolo is also variable being controlled by the "Depth" Control.

SERVICE

If the Amplifier is in need of servicing, consult a reliable radio man. The electrical diagram herein should be shown to the repairman to assist him in servicing the Amplifier.

FUSE

The fuse used in this Amplifier is a type 3 AG Slo-Blo of one ampere rating.

DO NOT USE A FUSE OF HIGHER RATING.

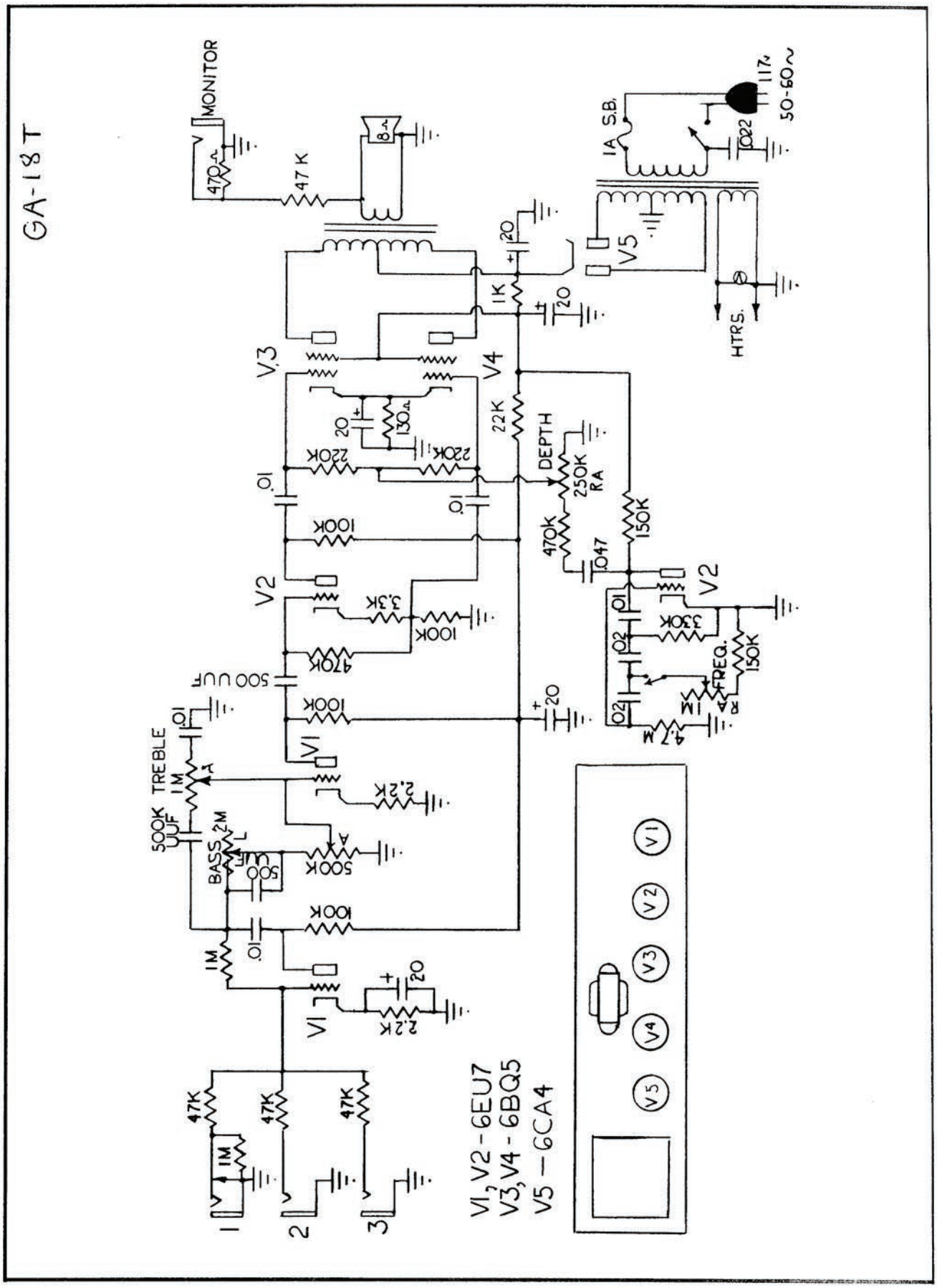
GA-18T
MONITOR
470Ω
47K
8Ω
1A S.B.
117~
50-60~
.022
V5
HTRS.
20
1K
V3
V4
22K
DEPTH
250K RA
470K
.047
150K
V2
330K
FREQ.
150K
RA 1M
4.7M
130Ω
220K
100K
.01
3.3K
470K
500 UUF
V1
2.2K
500K TREBLE 1M
500K UUF
BASS 2M
500 UUF
1M
47K
1
2
3
V1, V2 - 6EU7
V3, V4 - 6BQ5
V5 - 6CA4

GIBSON

Falcon

MODEL GA-19RVT AMPLIFIER

INSTRUCTIONS

GIBSON INC., KALAMAZOO, MICHIGAN

REVERB UNIT UNPACKING INSTRUCTIONS

IMPORTANT — READ CAREFULLY BEFORE USE

CAUTION

The Reverb Unit has been carefully constructed. It is, however, a delicate electronic device. Treat it with the same care and respect given a TV set.

Avoid dropping, sudden jolts, or rough handling and it will give excellent service. This beautifully musical Reverberation effect is not to be confused with the repeating signal produced by the mechanical tape recorder style of echo units.

UNPACKING

Amplifiers are carefully packed to prevent damage in shipment. However, upon receipt of the amplifier, examine carefully to determine if there has been breakage of tubes or parts. If damage has occurred during shipment, call the Transportation Company immediately, and place a claim.

TUBES

Make certain all tubes are seated firmly into their respective sockets. Each tube is labeled for proper replacement should any tube be out of its socket. Be especially careful when inserting tubes to see that the pins on the tube are correctly aligned with the holes in the socket before pushing into place. Do not twist tube — push tube straight into socket. It is advisable to check tubes from time to time depending on amount of use and excellence of performance. *Be sure tubes are always returned to proper sockets and seated firmly.*

REVERB POWER UNIT SET UP INSTRUCTIONS

CAUTION

Damage to the amplifier will result if it is connected to an improper power source. This amplifier is designed to be operated on 105-125 volt, 50-60 cycle alternating current only. The voltage from the power lines should not exceed 125, and the frequency of the current should be either 50 or 60 cycles. When ready to use power, insert the plug on the power cord into the electric outlet and move switch to "on." After approximately one minute for the tubes to heat, the amplifier is ready for use.

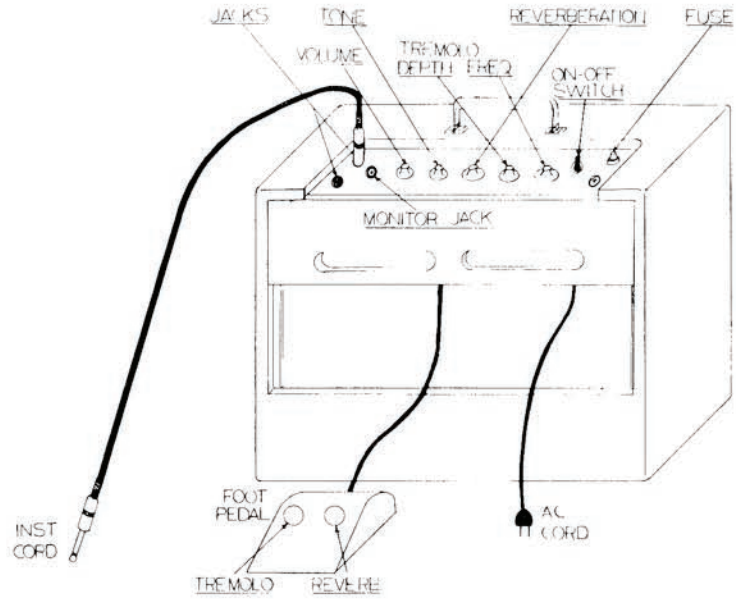

REVERBERATION —

Due to the unusual flexibility of the Reverberation circuit, it is important that the Operator understands the various control settings to obtain the total range of Reverberation effects of which this Amplifier is capable. Illustrated below are several examples of control settings which will reproduce different Reverberation effects.

Volume Tone Reverberation Depth Frequency

Example No. 1. 50% Main Signal - 50% Reverb.

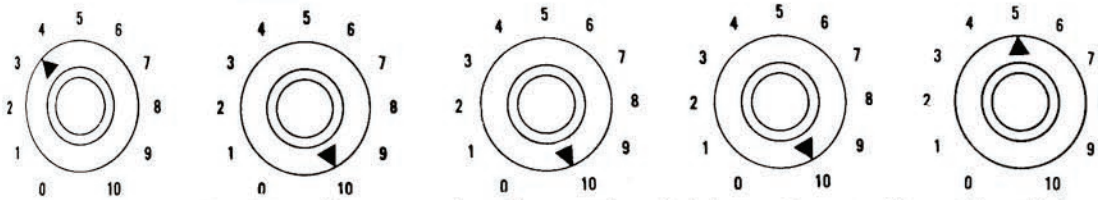

INSTRUMENT SETTINGS — Tone control and/or toggle switch in maximum treble position. Volume control setting 2½ to 3.

Example No. 2. 75% Main Signal - 25% Reverb.

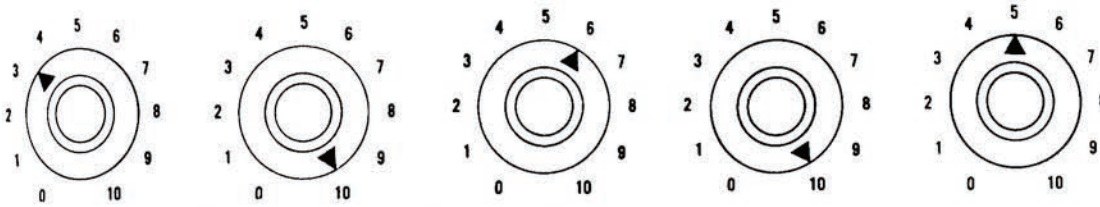

INSTRUMENT SETTINGS — Same as Example No. 1.

Example No. 3. 25% Main Signal - 75% Reverb.

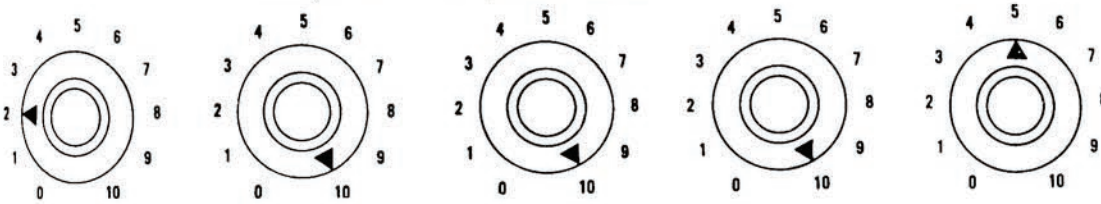

INSTRUMENT SETTINGS — Same as Example No. 1.

Example No. 4. 100% Reverb.

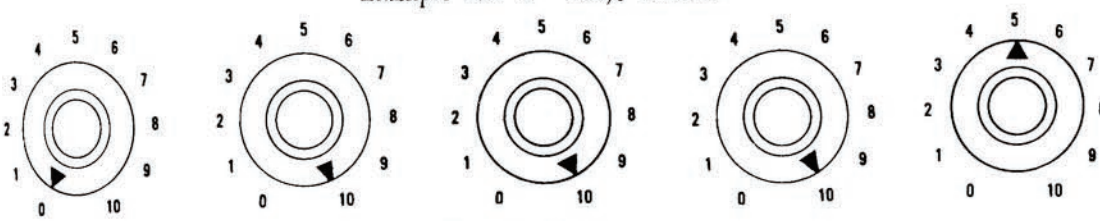

INSTRUMENT SETTINGS — Same as Example No. 1.

FOOT SWITCH MUST BE IN THE "ON" POSITION FOR REVERBERATION.

OPERATION OF MICROPHONE

The high gain and high fidelity characteristics of this Amplifier permit the use of most of the popular high impedance microphones for public address work. The microphone should be plugged into the Number One jack and it is not recommended that other instruments be used in conjunction with the microphone.

When using a microphone it is important that the Number 280 or similar shielded plug be attached to the cord. The ordinary phone plug with bakelite or other non-shielded cover is not suitable because the leads from the microphone must be completely shielded. Otherwise, objectionable hum will result. Figure A illustrates the proper way to connect the plug to the microphone cable.
To use the microphone, insert the plug in the Number One jack and advance the Volume control until a feedback squeal or howl is produced on the loudspeaker. Reduce the volume control to just below the feedback point. This setting will vary considerably, depending upon the size of the room, its acoustical properties and the distance between the microphone and loudspeaker. Feedback is the limiting factor in all public address installations and is caused when the level of sound from the loudspeakers is sufficient to actuate the microphone. The general rule when setting up the equipment is to place the loudspeaker as far from the microphone as possible.



Figure A

TREMOLO

The Tremolo effect adds another dimension to the Reverberation effect. It can be used either with or without reverberation at the players discretion. The Tremolo is turned on or off by the use of the foot switch. The Tremolo Frequency Range has been carefully set to cover a wide range of Tremolo effects. The Depth of the Tremolo is also variable being controlled by the Depth control.

SERVICE

If the amplifier is in need of servicing, it should be taken to a reliable radio man. The electrical diagram in this folder should be shown the repairman to assist him in servicing the amplifier.

CAUTION

The Reverberation Unit must always be placed on a solid non-vibrating surface or footing when in operation.

Any sudden shock, jolt, or wiggle, when in use, will cause undesirable noise. The resultant clatter of an inadvertant shake or bump is annoying but not necessarily harmful. This delicate sensitivity to shock and vibration is a normal characteristic of the device.

No problem will be encountered while the unit is connected if supporting surface is solid and unit is not moved about. To avoid the unwanted noise, turn the reverberation unit off by pressing the foot switch.

FUSE

The fuse used in this Amplifier is a type 3AG of one ampere rating. DO NOT USE FUSES OF HIGHER RATING

OPERATION OF MICROPHONE

The high gain and high fidelity characteristics of this Amplifier permit the use of most of the popular high impedance microphones for public address work. The microphone should be plugged into the Number One jack and it is not recommended that other instruments be used in conjunction with the microphone.

When using a microphone it is important that the Number 280 or similar shielded plug be attached to the cord. The ordinary phone plug with bakelite or other non-shielded cover is not suitable because the leads from the microphone must be completely shielded. Otherwise, objectionable hum will result. Figure A illustrates the proper way to connect the plug to the microphone cable.
To use the microphone, insert the plug in the Number One jack and advance the Volume control until a feedback squeal or howl is produced on the loudspeaker. Reduce the volume control to just below the feedback point. This setting will vary considerably, depending upon the size of the room, its acoustical properties and the distance between the microphone and loudspeaker. Feedback is the limiting factor in all public address installations and is caused when the level of sound from the loudspeakers is sufficient to actuate the microphone. The general rule when setting up the equipment is to place the loudspeaker as far from the microphone as possible.



Figure A

TREMOLO

The Tremolo effect adds another dimension to the Reverberation effect. It can be used either with or without reverberation at the players discretion. The Tremolo is turned on or off by the use of the foot switch. The Tremolo Frequency Range has been carefully set to cover a wide range of Tremolo effects. The Depth of the Tremolo is also variable being controlled by the Depth control.

SERVICE

If the amplifier is in need of servicing, it should be taken to a reliable radio man. The electrical diagram in this folder should be shown the repairman to assist him in servicing the amplifier.

CAUTION

The Reverberation Unit must always be placed on a solid non-vibrating surface or footing when in operation.

Any sudden shock, jolt, or wiggle, when in use, will cause undesirable noise. The resultant clatter of an inadvertant shake or bump is annoying but not necessarily harmful. This delicate sensitivity to shock and vibration is a normal characteristic of the device.

No problem will be encountered while the unit is connected if supporting surface is solid and unit is not moved about. To avoid the unwanted noise, turn the reverberation unit off by pressing the foot switch.

FUSE

The fuse used in this Amplifier is a type 3AG of one ampere rating. DO NOT USE FUSES OF HIGHER RATING.

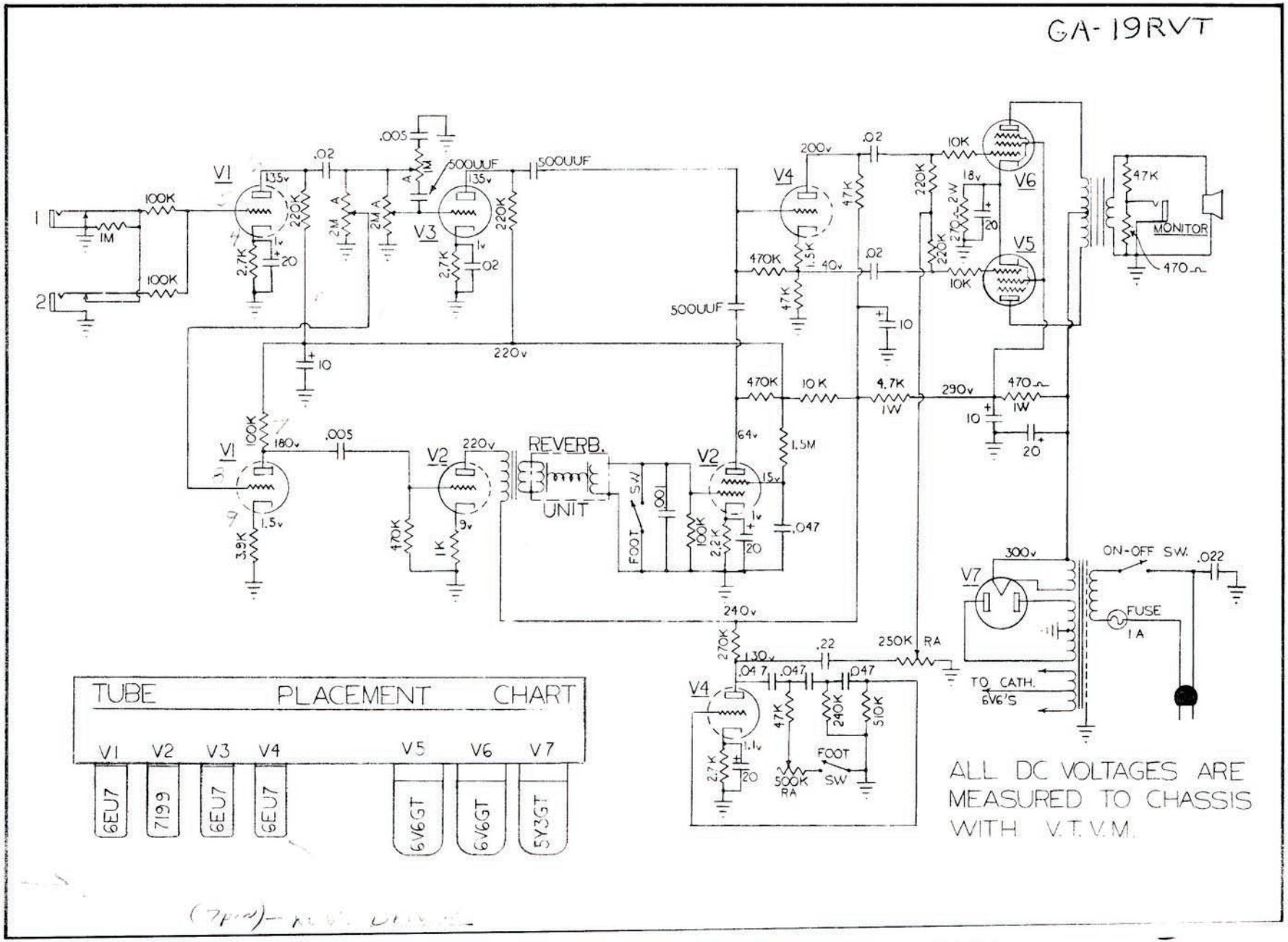
GA-19RVT
TUBE PLACEMENT CHART
V1 V2 V3 V4 V5 V6 V7
6EU7 7199 6EU7 6EU7 6V6GT 6V6GT 5Y3GT
REVERB. UNIT
FOOT SW
MONITOR
ON-OFF SW.
FUSE 1A
TO CATH. 6V6'S
500UUF
220v
240v
290v
300v
250K RA
500K RA
ALL DC VOLTAGES ARE MEASURED TO CHASSIS WITH V.T.V.M.

GIBSON

MODEL GA-20 AMPLIFIER

INSTRUCTIONS

GIBSON INC., KALAMAZOO, MICH.

GA-20

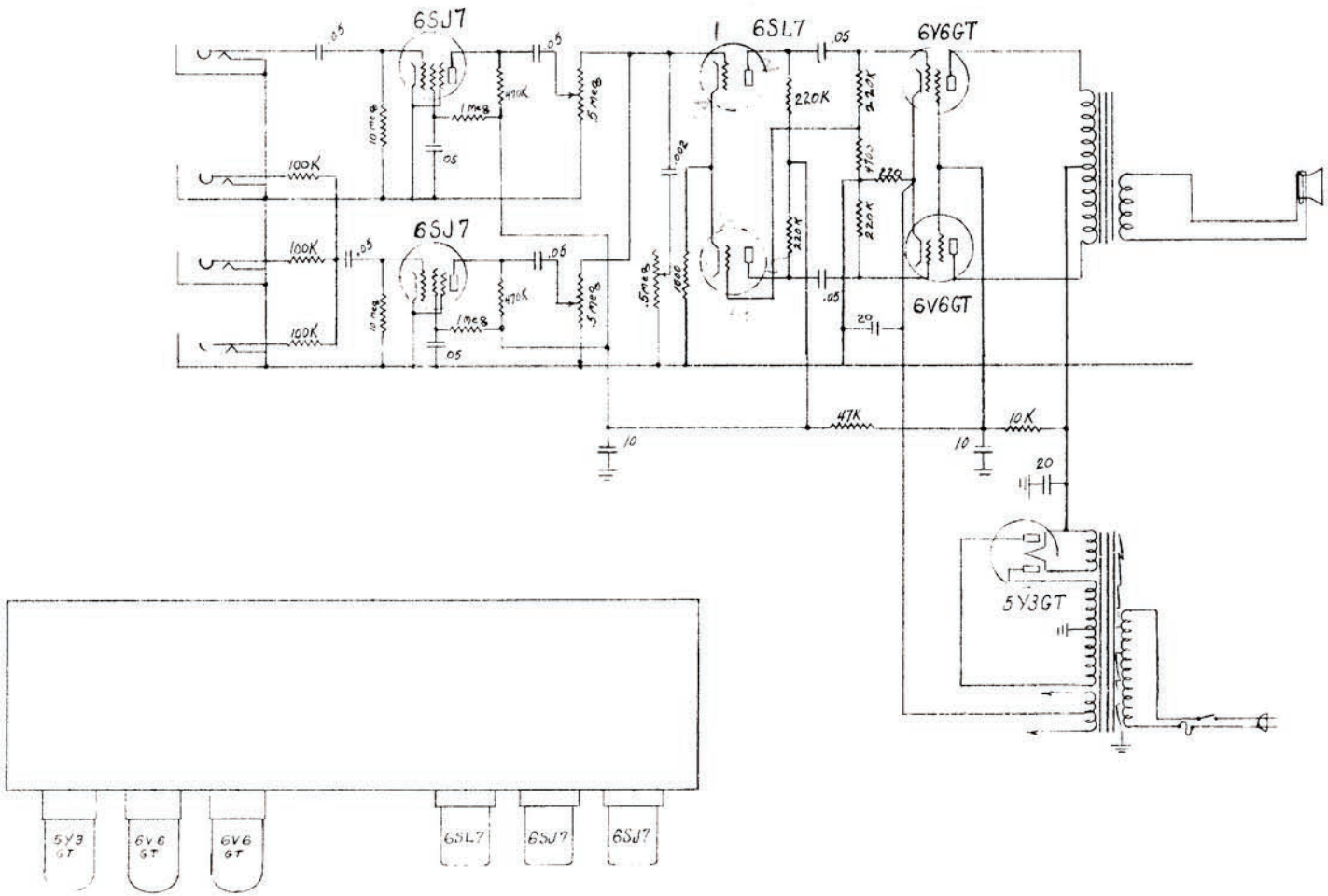
6SJ7
6SJ7
6SL7
6V6GT
6V6GT
5Y3GT
100K
100K
100K
10 meg
1 meg
470K
.5 meg
.05
.002
1000
220K
220K
220K
220K
47K
10K
10
10
20
20
5Y3 GT
6V6 GT
6V6 GT
6SL7
6SJ7
6SJ7

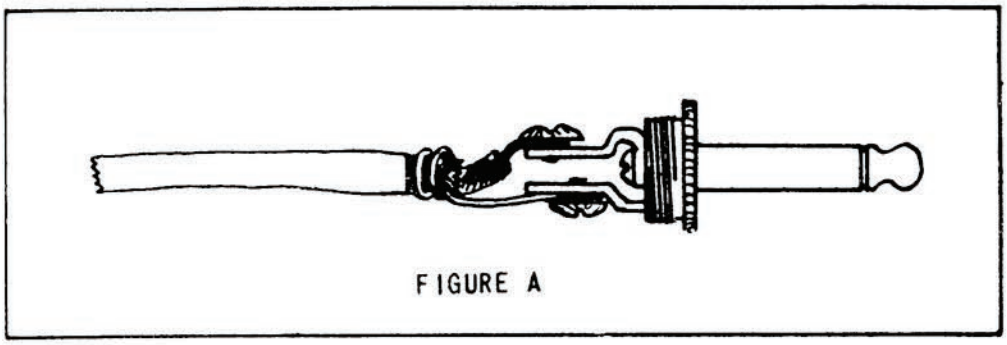

FIGURE A

OPERATION OF INSTRUMENT

When one, two, or three instruments are plugged into the jacks marked "Instruments", three stages of amplification are used.

The socket marked MICROPHONE may also be used with any of the GIBSON electrical instruments. When used this way a careful setting of the volume control marked MICROPHONE must be made to avoid overload and consequent distortion. This adjustment can be easily made by turning the volume control on the guitar or other instrument all the way on and setting the MICROPHONE control at the point where no distortion occurs when the strings are struck with maximum force. By utilizing the MICROPHONE socket in this way a fourth instrument can be plugged in, making a total of four electrical instruments which may be used and blended.

The tone control circuit for this amplifier has been designed to give the player an extremely wide range of tonal coloring. With the tone control set to the extreme bass a very pleasing tone is produced by instruments having their pick-ups placed close to the finger board. With the tone control set to the extreme treble, unusual brilliance may be obtained from instruments that have the pick-up placed close to the bridge.

OPERATION OF THE MICROPHONE

Because of the high power output, high gain and high fidelity characteristics of the GIBSON GA-20 amplifier it makes an exceptionally fine public address system when used with either the crystal, dynamic or velocity types of microphones.

While the amplifier will operate very well with any of the crystal, medium or high impedance dynamic or velocity (ribbon) microphones, it is recommended that, before investing in a microphone, you consult your GIBSON dealer. Authorized GIBSON dealers can supply you with a microphone which has been selected and matched to the amplifier, thus insuring the most faithful reproduction of voice and music.

When using a microphone it is important that the GIBSON 75A or similar shielded plug be attached to the cord. The ordinary phone plug with bakelite or other non-shielded cover is not suitable because the leads from the microphone must be completely shielded. Otherwise objectionable hum will result. Figure A illustrates the proper way to connect the plug to the microphone cable.

To use the microphone, insert the plug in the MICROPHONE socket and advance the MICROPHONE volume control until a feedback squeal or howl is produced in the loudspeaker. Reduce the volume control to just below the feedback point. This setting will vary considerably

OPERATION OF THE MICROPHONE (Cont'd)

depending upon the size of the room, its acoustical properties and the distance between the microphone and loudspeaker. Feedback is the limiting factor in all public address installations and is caused when the level of sound from the loudspeakers is sufficient to actuate the microphone. The general rule when setting up the equipment is to place the loudspeaker as far from the microphone as possible.

The volume controls INSTRUMENTS and MICROPHONE, being completely independent of each other, allow the inputs from the various sources to be "mixed" or blended. Because of this flexibility many unusual effects can be easily worked out.

If the MICROPHONE socket is not in use turn the MICROPHONE volume control all the way off.

GENERAL

Amplifiers are carefully packed to prevent damage in shipment. However, upon receipt of the amplifier, look it over carefully to make sure there has been no breakage of tubes or parts. If you find that damage has occurred during shipment, we suggest the Transportation Company be called immediately, and a claim placed.

CAUTION

Damage to the amplifier will result if it is connected to an improper power source. This amplifier is designed to be operated on 105-125 volt, 50-60 cycle alternating current only. Make sure the voltage from the power lines is not over 125, and that the frequency of the current is either 50 or 60 cycles. When ready to turn on power, plug the power cord into the electric outlet and turn on the switch. Waft approximately one minute for the tubes to heat, and the amplifier is ready for use.

TUBES

Be sure tubes are in their proper positions before placing the amplifier in operation. All tubes have been tested and proved satisfactory before shipment.

SERVICE

If the amplifier is in need of servicing, we suggest it be taken to a reliable radio man. The electrical diagram attached should be shown the repairman to assist him in servicing the amplifier.

* * * *

The fuse used in the GA-20 amplifier is a type AG of two ampere rating. DO NOT USE FUSES OF HIGHER RATING.

GIBSON

MODEL GA-20T AMPLIFIER

INSTRUCTIONS

GIBSON INC., KALAMAZOO, MICHIGAN

GA-20T

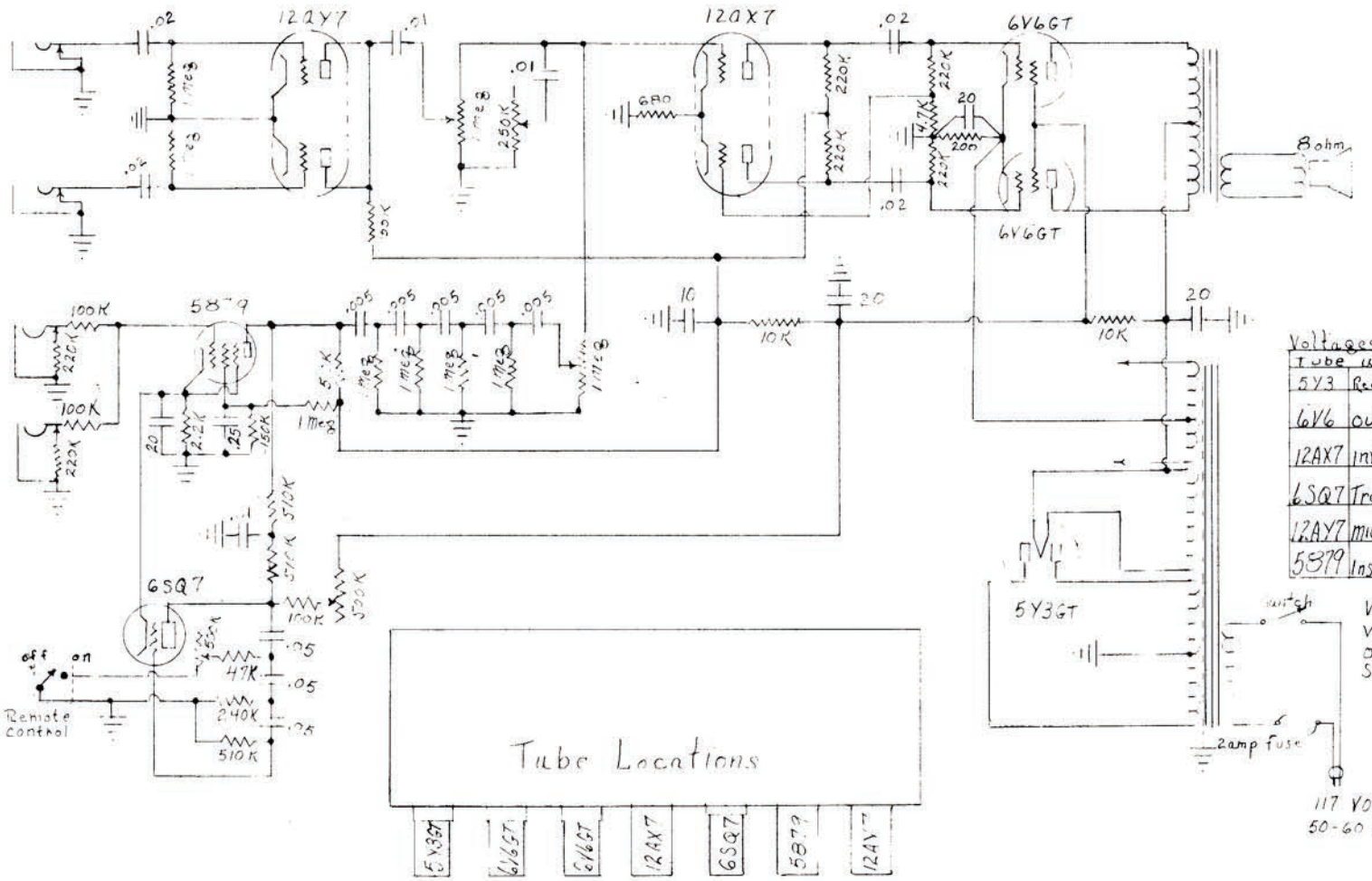

Voltages to Chassis, 20,000 OPV

Tube	use	EP	E SCR	EK	EB
5Y3	Rectifier	320	—	350	—
6V6	output	340	270	15	350
12AX7	inverter	100	—	.8	232
6SQ7	Tremolo	114	—	1.*	265
12AY7	microphone	47	—	—	232
5879	Instrument	126	24	1.*	232

Voltages Measured with tremolo Switch off and Depth Control Set at MINIMUM.

MODEL GA-20T AMPLIFIER

OPERATION OF INSTRUMENT

When one or two instruments are plugged into the jacks marked "Instruments," three stages of amplification are used. The total gain of both being set with the control marked "Channel 2."

The jacks marked "Instruments" or "Microphone" may also be used with any of the GIBSON Electrical Instruments. When used this way, a careful setting of the volume control marked "Microphone" must be made to avoid overload and consequent distortion. This adjustment can easily be made by turning the Volume Control on the guitar or other instrument completely on, and setting the Channel 1 Control at a point where no distortion occurs when the strings are struck with maximum force. By utilizing the Microphone jacks in this way, two or more instruments can be plugged in, making a total of four electrical instruments which may be used and blended.

The tone control circuit for this Amplifier has been designed to give the player an extremely wide range of tonal coloring.



Figure A

OPERATION OF MICROPHONE

Because of the high power output, high gain and high fidelity characteristics of the GIBSON GA-20T AMPLIFIER it makes an exceptionally fine public address system when used with either the crystal, dynamic or velocity types of microphones.

While the amplifier will operate very well with any of the crystal, medium or high impedance dynamic or velocity (ribbon) microphones, it is recommended that a GIBSON Dealer be consulted before investing in a microphone. Authorized Gibson Dealers can supply a microphone which has been selected and matched to the amplifier, thus insuring the most faithful reproduction of voice and music.

When using a microphone it is important that the GIBSON 280 or similar shielded plug be attached to the cord. The ordinary phone plug with bakelite or other non-shielded cover is not suitable because the leads from the microphone must be completely shielded. Otherwise, objectionable hum will result. Figure A illustrates the proper way to connect the plug to the microphone cable. To use the microphone, insert the plug in the "Microphone" jack and advance the microphone volume control until a feedback squeal or howl is produced on the loudspeaker. Reduce the volume control to just below the feedback point. This setting will vary considerably, depending upon the size of the room, its acoustical properties and the distance between the microphone and loudspeaker. Feedback is the limiting factor in all public address installations and is caused when the level of sound from the loudspeakers is sufficient to actuate the microphone. The general rule when setting up the equipment is to place the loudspeaker as far from the microphone as possible.

If the Microphone jacks are not in use, turn the Channel 1 volume control completely off.

TREMOLO

The Tremolo effect is turned on and off by means of a Push Type Foot Switch. The Tremolo frequency of the Amplifier is controlled by the Variable Control marked "Frequency." The speeds have been carefully set to cover a wide range of Tremolo effects. The depth of the Tremolo is also variable being controlled by the "Depth" Control.

GENERAL

Amplifiers are carefully packed to prevent damage in shipment. However, upon receipt of the Amplifier, examine carefully to determine if there has been breakage of tubes or parts. If damage has occurred during shipment, the Transportation Company should be notified immediately, and a claim placed.

CAUTION

Damage to the Amplifier will result if it is connected to an improper power source. This Amplifier is designed to be operated on 105 - 125 volt, 50 - 60 cycle alternating current ONLY. Check the voltage from the power lines to determine that it is not over 125 volts, and that the frequency of the current is either 50 or 60 cycles.

When ready to use power, plug the power cord into the electric outlet and move the switch to the ON position. Approximately one minute is required for the tubes to heat before the Amplifier is ready for use.

TUBES

Check tubes for proper positioning before placing the Amplifier in operation. All tubes have been tested and proved satisfactory before shipment.

SERVICE

If the Amplifier is in need of servicing, consult a reliable radio man. The electrical diagram herein should be shown to the repairman to assist him in servicing the Amplifier.

FUSE

The fuse used in the GIBSON GA-20T AMPLIFIER is a type 3AG of two ampere rating. DO NOT USE A FUSE OF HIGHER RATING.

Gibson

MINUTEMAN
MODEL GA-20 RVT AMPLIFIER

INSTRUCTIONS

PRODUCT OF

Gibson Electronics

KALAMAZOO, MICHIGAN

IMPORTANT — READ CAREFULLY BEFORE USE

CAUTION

The Reverb Unit has been carefully constructed. It is, however, a delicate electronic device. Treat it with the same care and respect given a TV set.

Avoid dropping, sudden jolts, or rough handling and it will give excellent service. This beautifully musical Reverberation effect is not to be confused with the repeating signal produced by the mechanical tape recorder style of echo units.

UNPACKING

Amplifiers are carefully packed to prevent damage in shipment. However, upon receipt of the amplifier, examine carefully to determine if there has been breakage of tubes or parts. If damage has occurred during shipment, call the Transportation Company immediately, and place a claim.

TUBES

Make certain all tubes are seated firmly into their respective sockets. Each tube is labeled for proper replacement should any tube be out of its socket. Be especially careful when inserting tubes to see that the pins on the tube are correctly aligned with the holes in the socket before pushing into place. Do not twist tube — push tube straight into socket. It is advisable to check tubes from time to time depending on amount of use and excellence of performance. *Be sure tubes are always returned to proper sockets and seated firmly.*

CAUTION

Damage to the amplifier will result if it is connected to an improper power source. This amplifier is designed to be operated on 105-125 volt, 50-60 cycle alternating current only. The voltage from the power lines should not exceed 125, and the frequency of the current should be either 50 or 60 cycles. When ready to use amplifier, insert the plug on the power cord into the electric outlet and move switch to "on." After approximately one minute for the tubes to heat, the amplifier is ready for use.

A.C. POWER-POLARITY SWITCH

A convenient switch has been provided for performing a total of three functions, turning the amplifier on and off, and selecting the proper polarity of the power source which reduces the A.C. hum and other extraneous noises to a minimum. Two "On" positions have been provided. The hum and hiss level on one of the "On" positions will be noticeably lower - this is the correct "Polarity" for using the amplifier.

FUSE

The fuse used in this Amplifier is a type 3AG of 1½ amperes rating. DO NOT USE FUSES OF HIGHER RATING

SERVICE

If the amplifier is in need of servicing, it should be taken to a reliable radio man. The electrical diagram in this folder should be shown the repairman to assist him in servicing the amplifier.

REVERBERATION — EFFECTIVE IN CHANNEL 2 ONLY

The Reverberation Unit must always be placed on a solid non-vibrating surface or footing when in operation.

Any sudden shock, jolt, or wiggle, when in use, will cause undesirable noise. The resultant clatter of an inadvertant shake or bump is annoying but not necessarily harmful. This delicate sensitivity to shock and vibration is a normal characteristic of the device.

No problem will be encountered while the unit is connected if supporting surface is solid and unit is not moved about. To avoid the unwanted noise, turn the reverberation unit off by pressing the foot switch.

BASS AND TREBLE TONE CONTROLS

A separate control has been provided for control of the bass or low frequencies and for the treble or high frequencies. The use of these two controls allows the player to obtain the maximum combinations of tone from a beautiful clear treble to a deep resonant bass. Setting the "BASS" control at maximum and the "TREBLE" at minimum, produces the deepest, fullest bass tone. Setting the "TREBLE" control at maximum and the "BASS" at minimum produces a chime-like tone rich in higher harmonics and will enable the artist to pick harmonics with greater ease. When both "BASS' and "TREBLE" controls are set at minimum the middle register predominates.

TREMOLO — EFFECTIVE IN CHANNEL 2 ONLY

The Tremolo effect adds another dimension to the Reverberation effect. It can be used either with or without reverberation at the players discretion. The Tremolo is turned on or off by the use of the foot switch. The Tremolo Frequency Range has been carefully set to cover a wide range of Tremolo effects. The Depth of the Tremolo is also variable being controlled by the Depth control.

OPERATION OF MICROPHONE

The high gain and high fidelity characteristics of this Amplifier, permit the use of most of the popular high impedance microphones for public address work. The microphone should be plugged into the Number One jack and it is not recommended that other instruments be used in conjunction with the microphone.

When using a microphone it is important that the Number 280 or similar shielded plug be attached to the cord. The ordinary phone plug with bakelite or other non-shielded cover is not suitable because the leads from the microphone must be completely shielded. Otherwise, objectionable hum will result. Figure A illustrates the proper way to connect the plug to the microphone cable.
To use the microphone, insert the plug in the Number One jack and advance the Loudness control until a feedback squeal or howl is produced on the loudspeaker. Reduce the Loudness control to just below the feedback point. This setting will vary considerably, depending upon the size of the room, its acoustical properties and the distance between the microphone and loudspeaker. Feedback is the limiting factor in all public address installations and is caused when the level of sound from the loudspeakers is sufficient to actuate the microphone. The general rule when setting up the equipment is to place the loudspeaker as far from the microphone as possible.



Figure A

GA-20RVT

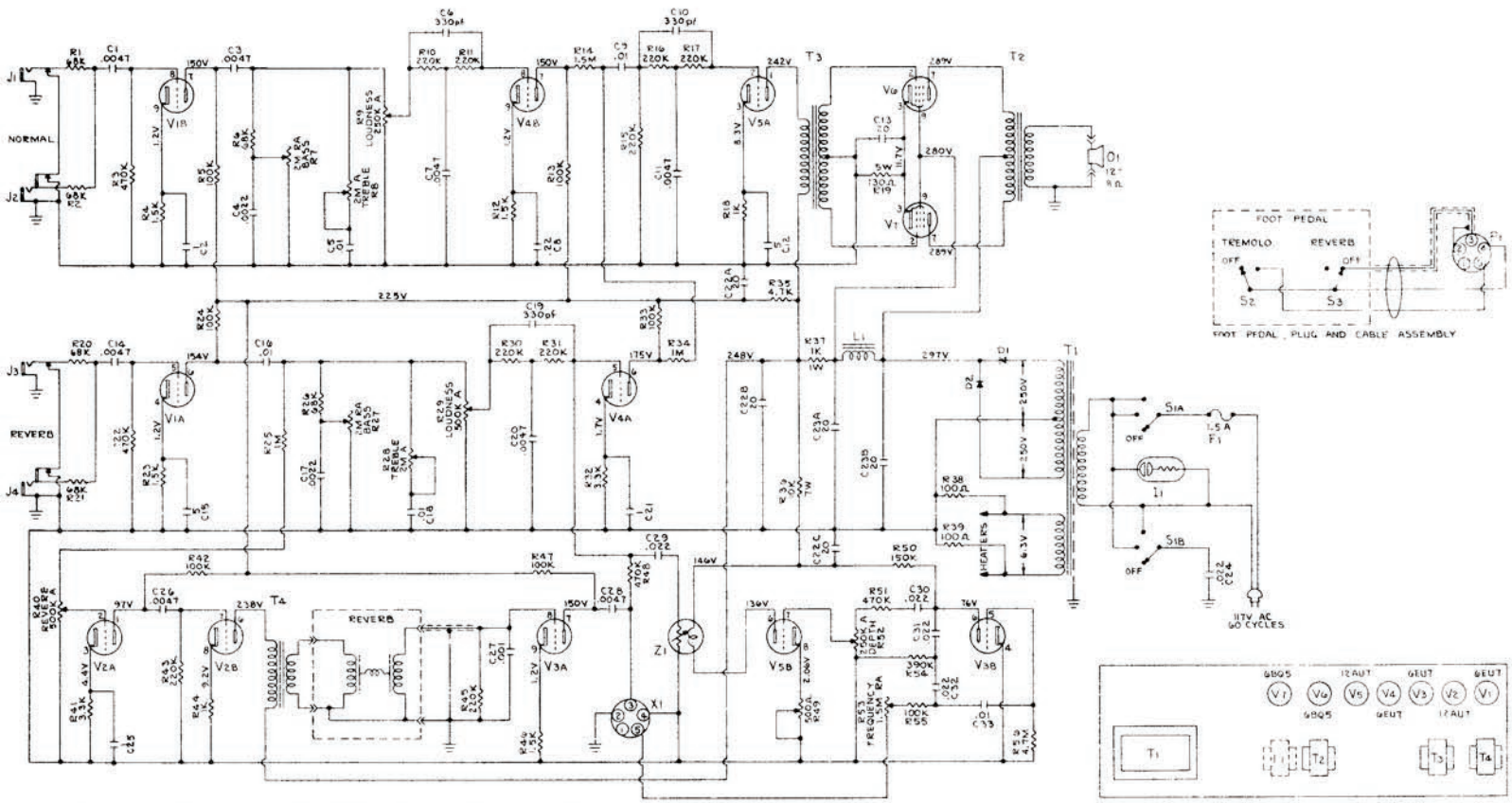

T1	TF-105P-1	Power Transformer	R9,R52	CBA-4008	Control - 250K, Audio (Loudness & Depth)
T2	TF-504-0	Output Transformer	R8,R28	CBA-811-3702-1	Control - 2 meg, Audio (Treble)
T3	TF-1001D-1	PF Driver Transformer	R29,R40	CBA-4007	Control - 500K, Audio (Loudness & Reverb)
T4	TF-E6400	Reverb Transformer	R53	CBA-811-3711-1	Control - 1.5 meg, RA (Frequency)
L1	TF-1003-C	Filter Choke	R7,R27	CBA-813-222-1	Control - 2 meg, RA (Bass)
			R49	CB-23391	Control - 500 ohm, WW
S1A,B	SW-899-1	Switch - SPST Rotary			
S2,S3	SW-82403	Switches - SPST			
I1	PL-35R	Pilot Light (Neon) w/clip			
X1	CL-78PCG-5	Foot Pedal Socket			
P1	CM-91MPM-5L	Foot Pedal Plug			
D1,D2	D1-404	Diode - 800 PIV			

GA-25

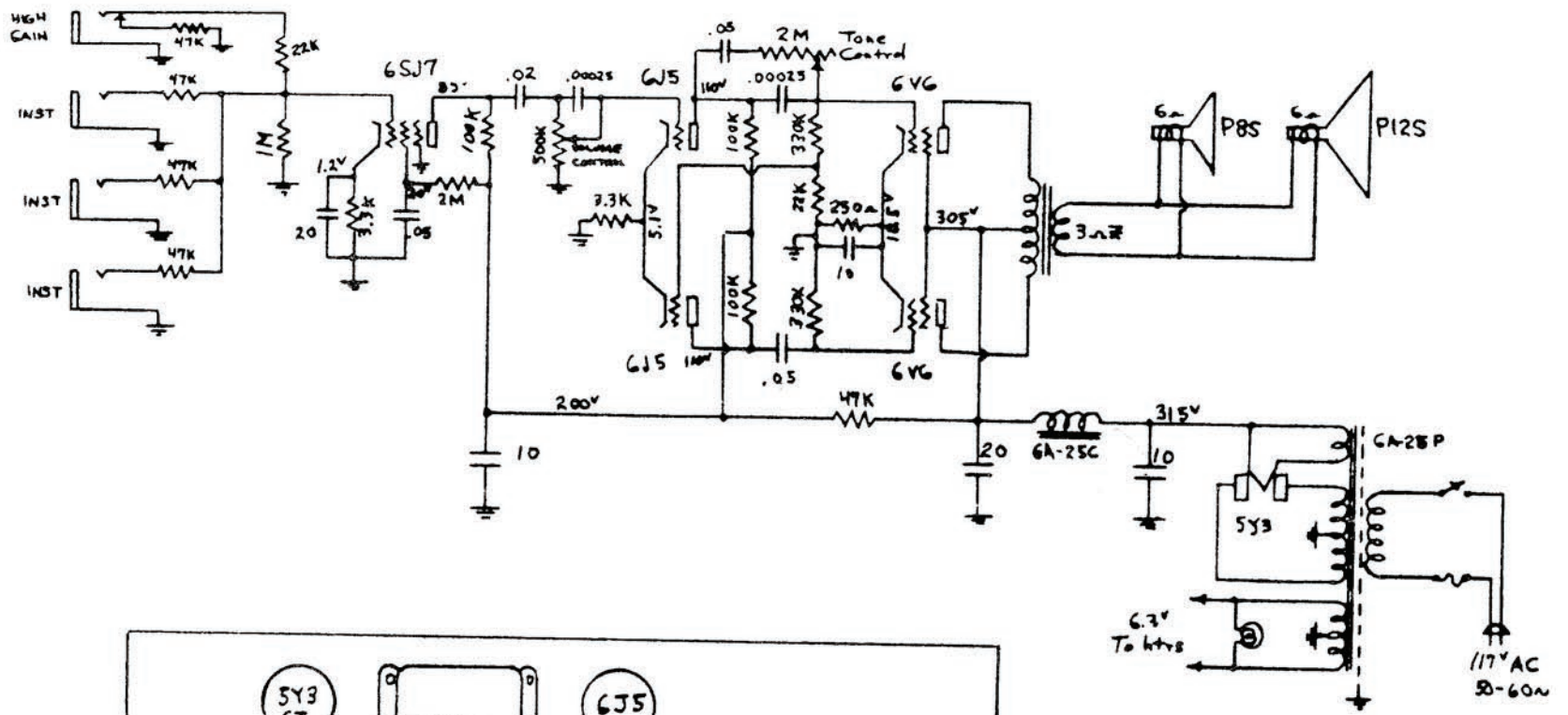

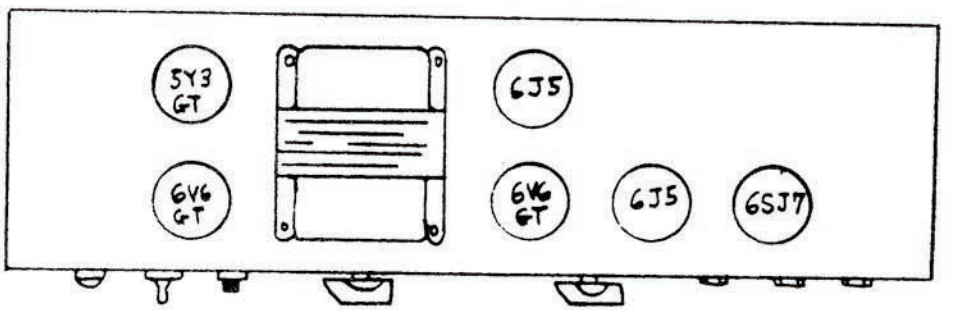

All plate, Screen & Cathode Voltages measured To Chassis

GIBSON INC	Schematic	
	24 Jan 61	MCP

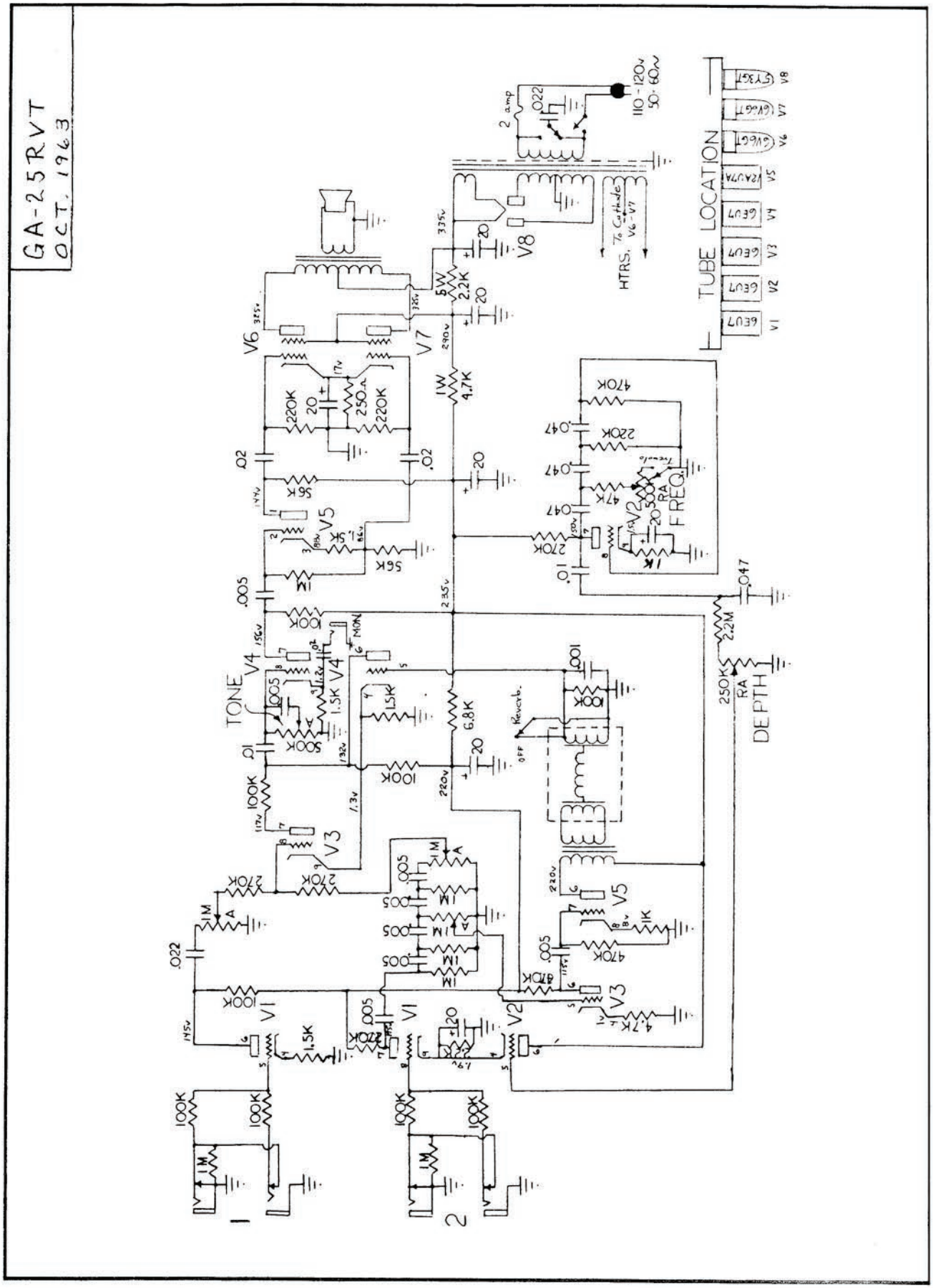
GA-25RVT
OCT. 1963
TUBE LOCATION
V1 6EU7
V2 6EU7
V3 6EU7
V4 6EU7
V5 12AU7A
V6 6V6GT
V7 6V6GT
V8 5Y3GT
110-120v
50-60~
2 amp
.022
HTRS.
To Cathode V6-V7
V8
V7
V6
V5
V4
V3
V2
V1
TONE
DEPTH
FREQ.
Reverb.
OFF
MON
1
2

GIBSON

MODEL GA-30 AMPLIFIER

INSTRUCTIONS

GIBSON INC., KALAMAZOO, MICH.

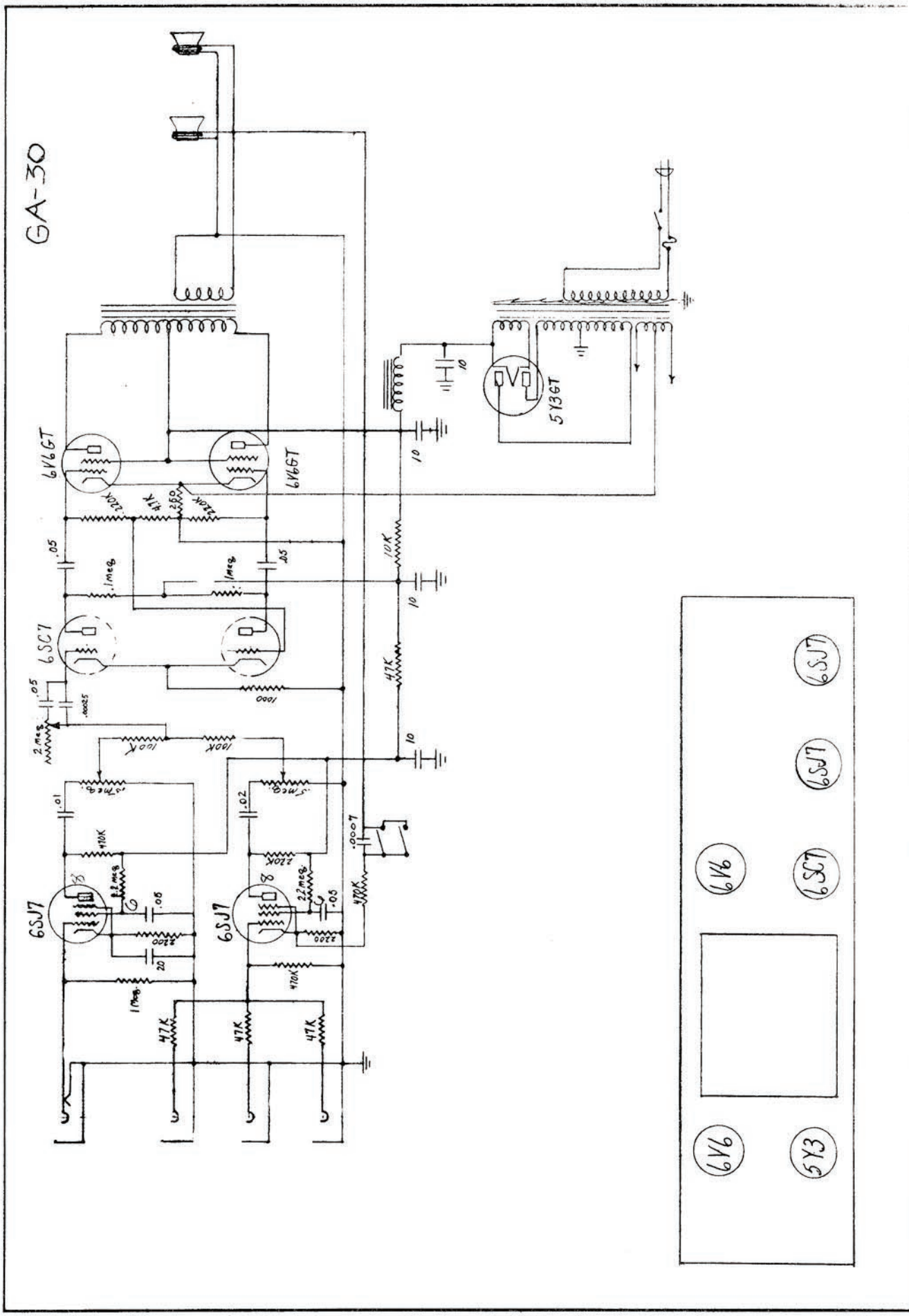
GA-30
6V6GT
6V6GT
6SC7
6SJ7
6SJ7
5Y3GT
6V6
6SC7
6SJ7
6SJ7
6V6
5Y3



FIGURE A

OPERATION OF INSTRUMENT

When one, two, or three instruments are plugged into the jacks marked "Instruments", three stages of amplification are used.

The socket marked MICROPHONE may also be used with any of the GIBSON electrical instruments. When used this way a careful setting of the volume control marked MICROPHONE must be made to avoid overload and consequent distortion. This adjustment can be easily made by turning the volume control on the guitar or other instrument all the way on and setting the MICROPHONE control at the point where no distortion occurs when the strings are struck with maximum force. By utilizing the MICROPHONE socket in this way a fourth instrument can be plugged in, making a total of four electrical instruments which may be used and blended.

The tone control circuit for this amplifier has been designed to give the player an extremely wide range of tonal coloring. With the tone control set to the extreme bass a very pleasing tone is produced by instruments having their pick-ups placed close to the finger board. With the tone control set to the extreme treble, unusual brilliance may be obtained from instruments that have the pick-up placed close to the bridge.

OPERATION OF THE MICROPHONE

Because of the high power output, high gain and high fidelity characteristics of the GIBSON GA-30 amplifier it makes an exceptionally fine public address system when used with either the crystal, dynamic or velocity types of microphones.

While the amplifier will operate very well with any of the crystal, medium or high impedance dynamic or velocity (ribbon) microphones, it is recommended that, before investing in a microphone, you consult your GIBSON dealer. Authorized GIBSON dealers can supply you with a microphone which has been selected and matched to the amplifier, thus insuring the most faithful reproduction of voice and music.

When using a microphone it is important that the GIBSON 75A or similar shielded plug be attached to the cord. The ordinary phone plug with bakelite or other non-shielded cover is not suitable because the leads from the microphone must be completely shielded. Otherwise objectionable hum will result. Figure A illustrates the proper way to connect the plug to the microphone cable.

To use the microphone, insert the plug in the MICROPHONE socket and advance the MICROPHONE volume control until a feedback squeal or howl is produced in the loudspeaker. Reduce the volume control to just below the feedback point. This setting will vary considerably

(over)

OPERATION OF THE MICROPHONE (Cont'd)

depending upon the size of the room, its acoustical properties and the distance between the microphone and loudspeaker. Feedback is the limiting factor in all public address installations and is caused when the level of sound from the loudspeakers is sufficient to actuate the microphone. The general rule when setting up the equipment is to place the loudspeaker as far from the microphone as possible.

The volume controls INSTRUMENTS and MICROPHONE, being completely independent of each other, allow the inputs from the various sources to be "mixed" or blended. Because of this flexibility many unusual effects can be easily worked out.

If the MICROPHONE socket is not in use turn the MICROPHONE volume control all the way off.

TONE EXPANDER

This innovation in Musical Instrument Amplifiers greatly increases the total TONE RANGE. When the switch is moved to the side marked "high", the entire tone range of the amplifier is thrown to the higher frequencies, producing a beautiful liquid treble tone which is further controlled by means of the tone control. When the switch is moved to the side marked "low", the tone range is shifted to the lower frequencies and produces a deep resonant bass tone which is also further controlled by use of the tone control.

GENERAL

Amplifiers are carefully packed to prevent damage in shipment. However, upon receipt of the amplifier, look it over carefully to make sure there has been no breakage of tubes or parts. If you find that damage has occurred during shipment, we suggest the Transportation Company be called immediately, and a claim placed.

CAUTION

Damage to the amplifier will result if it is connected to an improper power source. This amplifier is designed to be operated on 105-125 volt, 50-60 cycle alternating current only. Make sure the voltage from the power lines is not over 125, and that the frequency of the current is either 50 or 60 cycles. When ready to turn on power, plug the power cord into the electric outlet and turn on the switch. Wait approximately one minute for the tubes to heat, and the amplifier is ready for use.

TUBES

Be sure tubes are in their proper positions before placing the amplifier in operation. All tubes have been tested and proved satisfactory before shipment.

SERVICE

If the amplifier is in need of servicing, we suggest it be taken to a reliable radio man. The electrical diagram attached should be shown the repairman to assist him in servicing the amplifier.

* * * *

The fuse used in the GA-30 amplifier is a type AG of two ampere rating. DO NOT USE FUSES OF HIGHER RATING.

GIBSON

MODEL GA-30 AMPLIFIER



INSTRUCTIONS

GIBSON INC., KALAMAZOO, MICHIGAN

GA-30

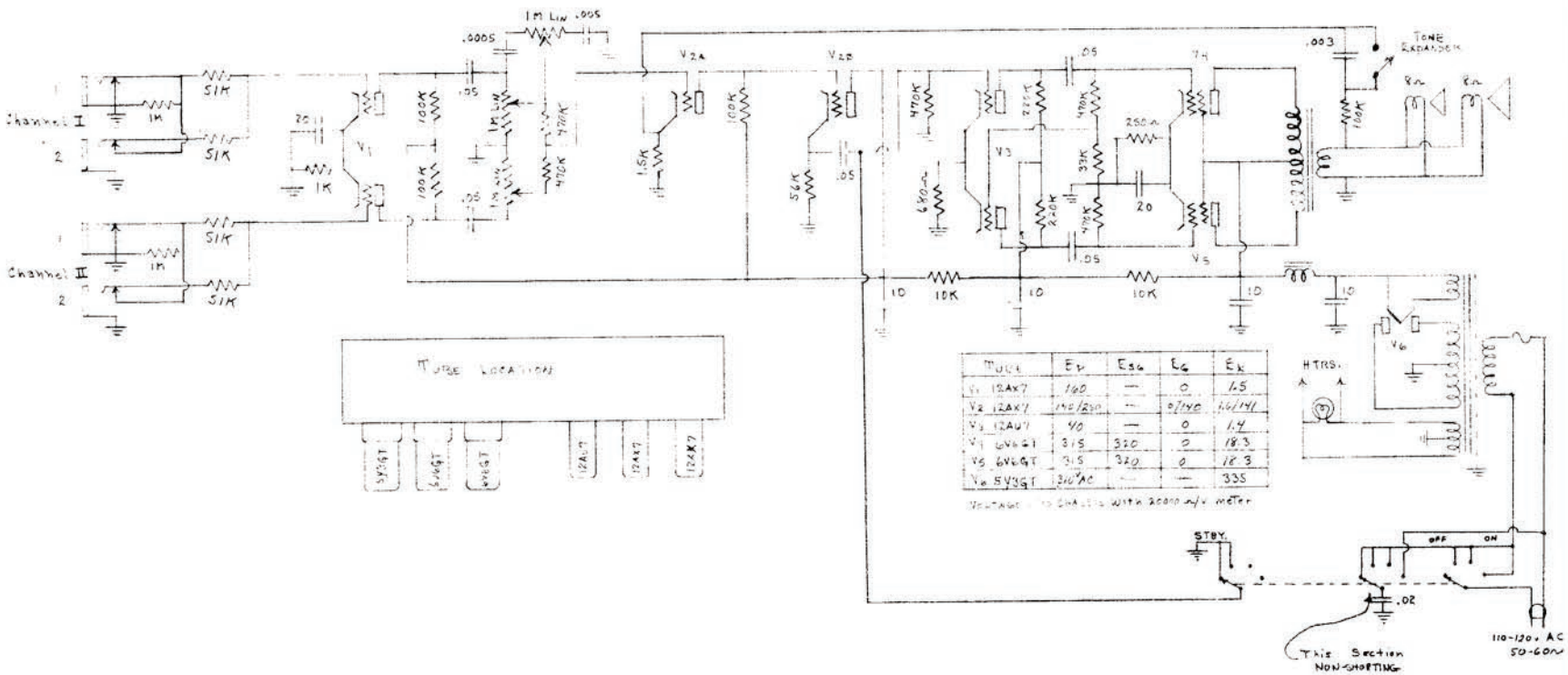

TUBE	E_P	E_{SG}	E_G	E_K
V_1 12AX7	160	—	0	1.5
V_2 12AX7	140/250	—	0/140	1.6/141
V_3 12AU7	40	—	0	1.4
V_4 6V6GT	315	320	0	18.3
V_5 6V6GT	315	320	0	18.3
V_6 5Y3GT	310VAC	—	—	335

VOLTAGE TO CHASSIS WITH 20000 Ω/V METER

MODEL GA-30 AMPLIFIER

OPERATION OF INSTRUMENT OR MICROPHONE

Always use jack marked "1" first.

When one or two instruments are plugged into the jacks marked "Instruments," five stages of amplification are used. The total gain of both being set with the control marked "Instruments."

The jacks marked "Microphone" may also be used with any of the GIBSON Electrical Instruments. When used this way, a careful setting of the volume control marked "Microphone" must be made to avoid overload and consequent distortion. This adjustment can easily be made by turning the Volume Control on the guitar or other instrument completely on, and setting the Microphone Control at a point where no distortion occurs when the strings are struck with maximum force. By utilizing the Microphone jacks in this way, two or more instruments can be plugged in, making a total of four electrical instruments which may be used and blended.

The tone control circuit for this Amplifier has been designed to give the player an extremely wide range of tonal coloring.



Figure A

OPERATION OF MICROPHONE

Because of the high power output, high gain and high fidelity characteristics of the GIBSON GA-30 AMPLIFIER it makes an exceptionally fine public address system when used with either the crystal, dynamic or velocity types of microphones.

While the amplifier will operate very well with any of the crystal, medium or high impedance dynamic or velocity (ribbon) microphones, it is recommended that a GIBSON Dealer be consulted before investing in a microphone. Authorized Gibson Dealers can supply a microphone which has been selected and matched to the amplifier, thus insuring the most faithful reproduction of voice and music.

When using a microphone it is important that the GIBSON 280 or similar shielded plug be attached to the cord. The ordinary phone plug with bakelite or other non-shielded cover is not suitable because the leads from the microphone must be completely shielded. Otherwise, objectionable hum will result. Figure A illustrates the proper way to connect the plug to the microphone cable. To use the microphone, insert the plug in the "Microphone" jack and advance the Microphone volume control until a feedback squeal or howl is produced on the loudspeaker. Reduce the volume control to just below the feedback point. This setting will vary considerably, depending upon the size of the room, its acoustical properties and the distance between the microphone and loudspeaker. Feedback is the limiting factor in all public address installations and is caused when the level of sound from the loudspeakers is sufficient to actuate the microphone. The general rule when setting up the equipment is to place the loudspeaker as far from the microphone as possible.

If the Microphone jacks are not in use, turn the Microphone volume control completely off.

TONE EXPANDER

This innovation in Musical Instrument Amplifiers greatly increases the total TONE RANGE. When the switch is moved to the side marked "high," the entire tone range of the amplifier is in the higher frequencies, producing a beautiful liquid treble tone which is further controlled by means of the tone control. When the switch is moved to the side marked "low," the tone range is shifted to the lower frequencies and produces a deep resonant bass tone which is also further controlled by use of the tone control.

GENERAL

Amplifiers are carefully packed to prevent damage in shipment. However, upon receipt of the amplifier, examine carefully to determine if there has been breakage of tubes or parts. If damage has occurred during shipment, call the Transportation Company immediately, and place a claim.

CAUTION

Damage to the amplifier will result if it is connected to an improper power source. This amplifier is designed to be operated on 105-125 volt, 50-60 cycle alternating current only. The voltage from the power lines should not exceed 125, and the frequency of the current should be either 50 or 60 cycles. When ready to use power, insert the plug on the power cord into the electric outlet and move switch to "on." After approximately one minute for the tubes to heat, the amplifier is ready for use.

TUBES

Inspect tubes to determine if they are in their proper positions before placing the amplifier in operation. All tubes have been tested and proved satisfactory before shipment.

SERVICE

If the amplifier is in need of servicing, it should be taken to a reliable radio man. The electrical diagram in this folder should be shown the repairman to assist him in servicing the amplifier.

* * * *

The fuse used in the GA-30 amplifier is a type AG of two ampere rating. DO NOT USE FUSES OF HIGHER RATING.

GIBSON

MODEL GA-30RV AMPLIFIER



INSTRUCTIONS

GIBSON INC., KALAMAZOO, MICHIGAN

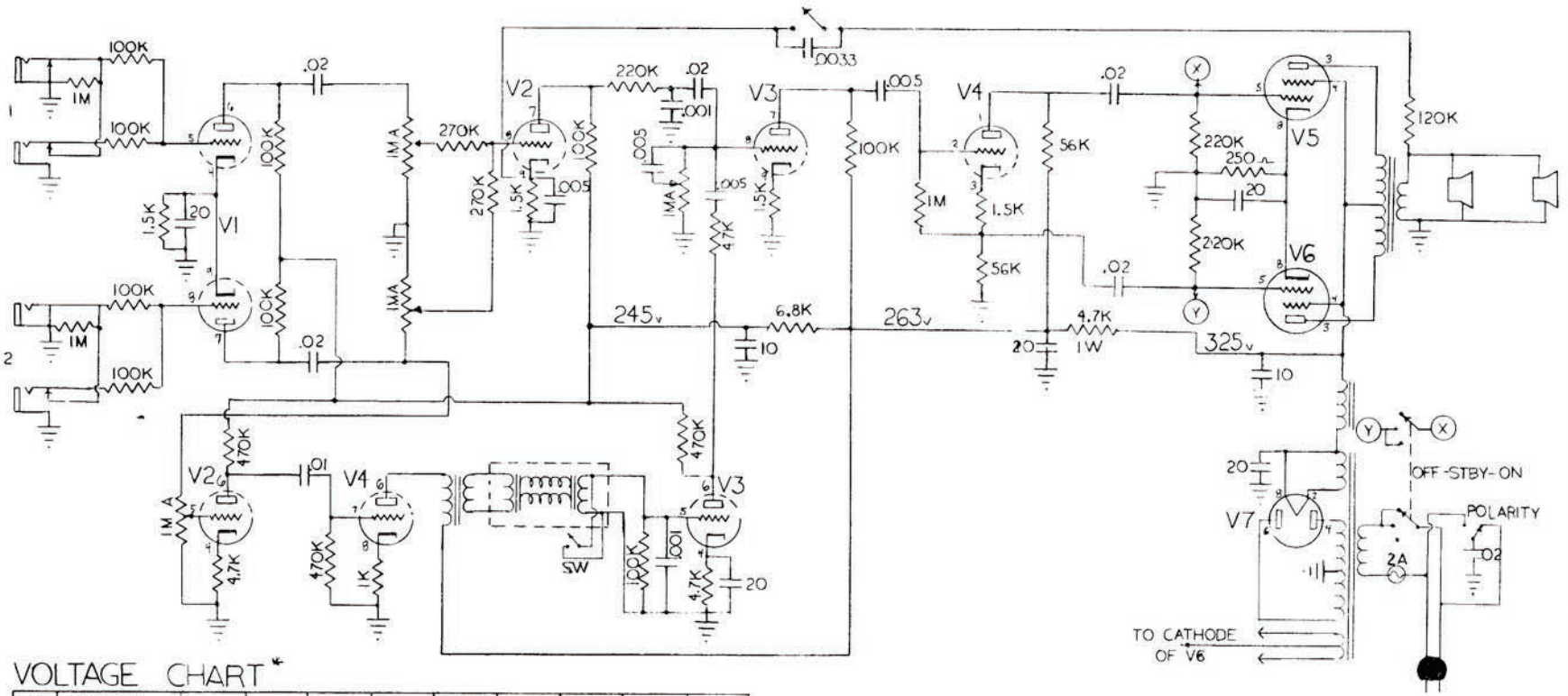

VOLTAGE CHART*

NO.	TYPE	PIN 1	PIN 2	PIN 3	PIN 4	PIN 5	PIN 6	PIN 7	PIN 8	PIN 9
V1	6EU7	FIL	FIL	—	1.75	0	190	190	0	1.75
V2	6EU7	FIL	FIL	—	1.25	0	122	160	0	1.20
V3	6EU7	FIL	FIL	—	1.20	0	122	180	0	1.30
V4	12AU7A	170	54	105	FIL	FIL	250	0	8.6	FIL
V5	6V6GT	0	FIL	320	325	0	—	FIL	18	—
V6	6V6GT	0	FIL	320	325	0	—	FIL	18	—
V7	5Y3GT	—	FIL	—	320 AC	—	320 AC	—	330	—

*MEASURED TO CHASSIS WITH 20,000 OHM / VOLT METER.

TUBE PLACEMENT CHART

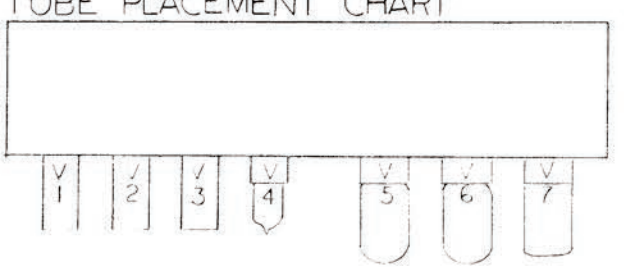

REVERBERATION — EFFECTIVE IN CHANNEL 2 ONLY

An exciting new dimension of sound providing Concert Hall effects in any size room.

The Reverberation unit is mounted vertically inside the left end of the Amplifier Case. The Reverberation mechanism is equipped with a locking device which provides protection for the mechanism during transportation. Before operating the Amplifier, unlock the Reverberation unit by pressing the Red Lever down until is in a vertical position. Remote control of the Reverberation effect is accomplished by an Off-On foot switch with fifteen feet of cable.

Due to the unusual flexibility of the GA-30RV Reverberation circuit, it is important that the Operator understands the various control settings to obtain the total range of Reverberation effects of which this Amplifier is capable. Illustrated below are several examples of control settings which will reproduce different Reverberation effects.

Volume 1 Volume 2 Tone Reverberation

Example No. 1. 50% Main Signal - 50% Reverb.

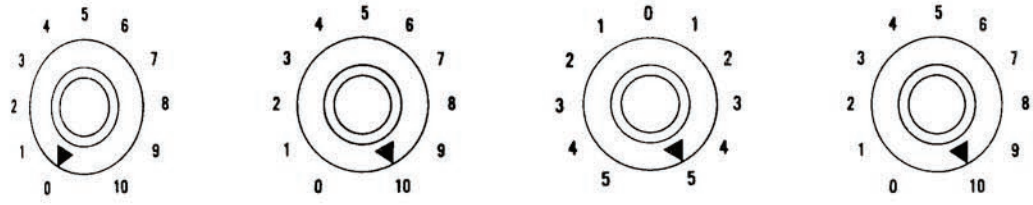

INSTRUMENT SETTINGS — Tone control and/or toggle switch in maximum treble position. Volume control setting 2½ to 3.

Example No. 2. 75% Main Signal - 25% Reverb.

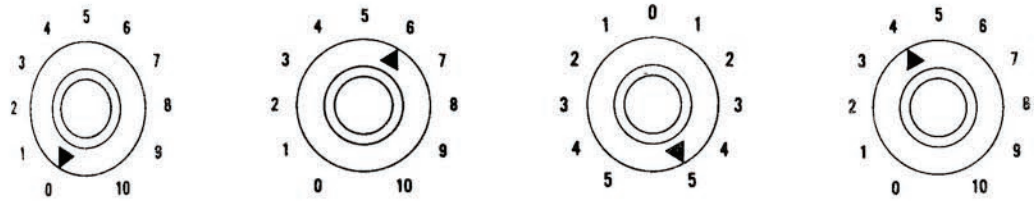

INSTRUMENT SETTINGS — Tone control same as above, Volume control setting 5 to 6.

Example No. 3. 25% Main Signal - 75% Reverb.

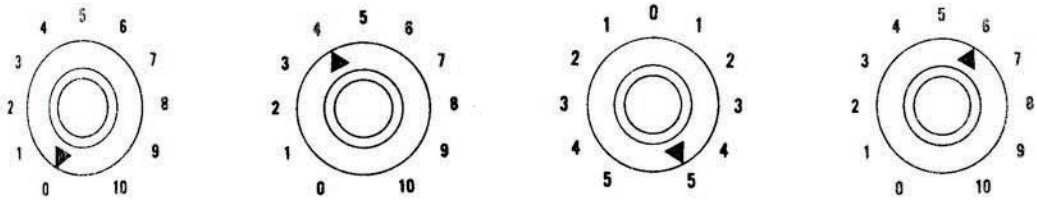

INSTRUMENT SETTINGS — Same as Example No. 2.

Example No. 4. 100% Reverb.

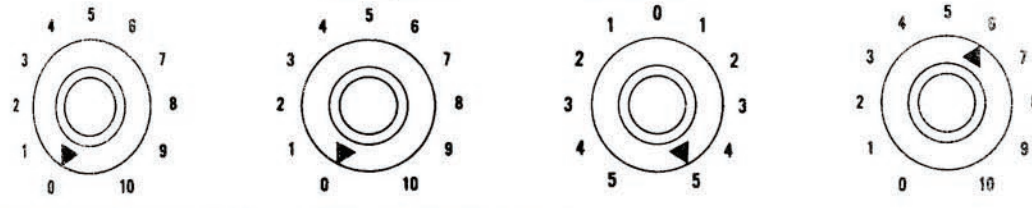

INSTRUMENT SETTINGS — Same as Example No. 2.

FOOT SWITCH MUST BE IN THE "ON" POSITION FOR REVERBERATION.

IMPORTANT — Always lock the Reverberation mechanism by raising the Red Lever until it stops (horizontal position) before transporting the Amplifier. Failure to do so may cause severe damage to the Reverberation unit.

TONE EXPANDER

This innovation in Musical Instrument Amplifiers greatly increases the total TONE RANGE. When the switch is moved to the side marked "high," the entire tone range of the amplifier is in the higher frequencies, producing a beautiful liquid treble tone which is further controlled by means of the tone control. When the switch is moved to the side marked "low," the tone range is shifted to the lower frequencies and produces a deep resonant bass tone which is also further controlled by use of the tone control.

POLARITY SWITCH

This added convenience enables the player to quickly find the polarity of the power source which reduces the A.C. hum and other extraneous noises to a minimum.

STANDBY SWITCH

The 110 Volt power switch has three positions: OFF, STANDBY, and ON. In the Standby position, the tubes are lighted and heating, but the speaker is disconnected, eliminating any possible accidental sounds. Movement of the switch from Standby to ON gives instant response without waiting to warm up.

GENERAL

Amplifiers are carefully packed to prevent damage in shipment. However, upon receipt of the amplifier, examine carefully to determine if there has been breakage of tubes or parts. If damage has occurred during shipment, call the Transportation Company immediately, and place a claim.

CAUTION

Damage to the amplifier will result if it is connected to an improper power source. This amplifier is designed to be operated on 105-125 volt, 50-60 cycle alternating current only. The voltage from the power lines should not exceed 125, and the frequency of the current should be either 50 or 60 cycles. When ready to use power, insert the plug on the power cord into the electric outlet and move switch to "on." After approximately one minute for the tubes to heat, the amplifier is ready for use.

TUBES

Inspect tubes to determine if they are in their proper positions before placing the amplifier in operation. All tubes have been tested and proved satisfactory before shipment.

SERVICE

If the amplifier is in need of servicing, it should be taken to a reliable radio man. The electrical diagram in this folder should be shown the repairman to assist him in servicing the amplifier.

* * * *

FUSE

The fuse used in the GA-30RV Amplifier is a type 3AG of two ampere rating. DO NOT USE FUSES OF HIGHER RATING.

Gibson

INVADER
MODEL GA-30RVT AMPLIFIER

"WITH SPECTRUM CONTROL"

INSTRUCTIONS

PRODUCT OF

Gibson Electronics

KALAMAZOO, MICHIGAN

IMPORTANT — READ CAREFULLY BEFORE USE

CAUTION

The Reverb Unit has been carefully constructed. It is, however, a delicate electronic device. Treat it with the same care and respect given a TV set.

Avoid dropping, sudden jolts, or rough handling and it will give excellent service. This beautifully musical Reverberation effect is not to be confused with the repeating signal produced by the mechanical tape recorder style of echo units.

UNPACKING

Amplifiers are carefully packed to prevent damage in shipment. However, upon receipt of the amplifier, examine carefully to determine if there has been breakage of tubes or parts. If damage has occurred during shipment, call the Transportation Company immediately, and place a claim.

TUBES

Make certain all tubes are seated firmly into their respective sockets. Each tube is labeled for proper replacement should any tube be out of its socket. Be especially careful when inserting tubes to see that the pins on the tube are correctly aligned with the holes in the socket before pushing into place. Do not twist tube — push tube straight into socket. It is advisable to check tubes from time to time depending on amount of use and excellence of performance. *Be sure tubes are always returned to proper sockets and seated firmly.*

CAUTION

Damage to the amplifier will result if it is connected to an improper power source. This amplifier is designed to be operated on 105-125 volt, 50-60 cycle alternating current only. The voltage from the power lines should not exceed 125, and the frequency of the current should be either 50 or 60 cycles. When ready to use amplifier, insert the plug on the power cord into the electric outlet and move switch to "on." After approximately one minute for the tubes to heat, the amplifier is ready for use.

A.C. POWER-POLARITY SWITCH

A convenient switch has been provided for performing a total of three functions, turning the amplifier on and off, putting the amplifier in "Standby" and selecting the proper polarity of the power source which reduces the A.C. hum and other extraneous noises to a minimum. In the "Standby" position the amplifier is kept "warmed up" and ready to play at the instant the switch is advanced to the "On" positions. Two "On" positions have been provided. The hum and hiss level on one of the "On" positions will be noticeably lower — this is the correct "Polarity" for using the amplifier.

In locations of extremely high noise levels, clipping the "Ground Clip" to a grounded object will greatly reduce objectionable noise and hum.

As an added convenience to the artist this amplifier is equipped with a "Standby pilot light" as well as the "Regular pilot light". When the "Green" light is on the amplifier is in "Standby"; when the "Red" light is on the amplifier is "On" and ready to play.

FUSE

The fuse used in this Amplifier is a type 3AG of two ampere rating. DO NOT USE A FUSE OF HIGHER RATING.

SERVICE

If the amplifier is in need of servicing, it should be taken to a reliable radio man. The electrical diagram in this folder should be shown the repairman to assist him in servicing the amplifier.

REVERBERATION — EFFECTIVE IN CHANNEL 2 ONLY

The Reverberation Unit must always be placed on a solid non-vibrating surface or footing when in operation.

Any sudden shock, jolt, or wiggle, when in use, will cause undesirable noise. The resultant clatter of an inadvertant shake or bump is annoying but not necessarily harmful. This delicate sensitivity to shock and vibration is a normal characteristic of the device.

No problem will be encountered while the unit is connected if supporting surface is solid and unit is not moved about. To avoid the unwanted noise, turn the reverberation unit off by pressing the foot switch.

TREMOLO — EFFECTIVE IN CHANNEL 2 ONLY

The Tremolo effect adds another dimension to the Reverberation effect. It can be used either with or without reverberation at the players discretion. The Tremolo is turned on or off by the use of the foot switch. The Tremolo Frequency Range has been carefully set to cover a wide range of Tremolo effects. The Depth of the Tremolo is also variable being controlled by the Depth control.

OPERATION OF MICROPHONE

The high gain and high fidelity characteristics of this Amplifier, permit the use of most of the popular high impedance microphones for public address work. The microphone should be plugged into the Number One Jack of Channel 1.

SPECTRUM CONTROLS

The wide range of tonal extremes required by different artists can all be accommodated with Gibson Spectrum Control. For maximum loudness with a given power, the "treble" control should be Maximum, the "mid range" minimum, and the bass near 5. With this adjustment the tone controls on the guitar will have their maximum effectiveness.

"Jazz" sound to the artist taste can be had by reducing the "treble", adding some "mid range", and adjusting the "bass" to the artist requirement.

Spectrum Controls plus the tone controls on the artist's instrument offer an endless variety of tonal color.

MONITOR JACK

This convenient jack is provided for extending the usefullness of the amplifier. Some of it's many uses include: — Use in tape recording; Use in driving additional amplifiers, feeding into Public Address systems; Use with Hi-Fi amplifiers. For best results the Monitor Jack should be fed into a High-impedance circuit.

GA-30RVT

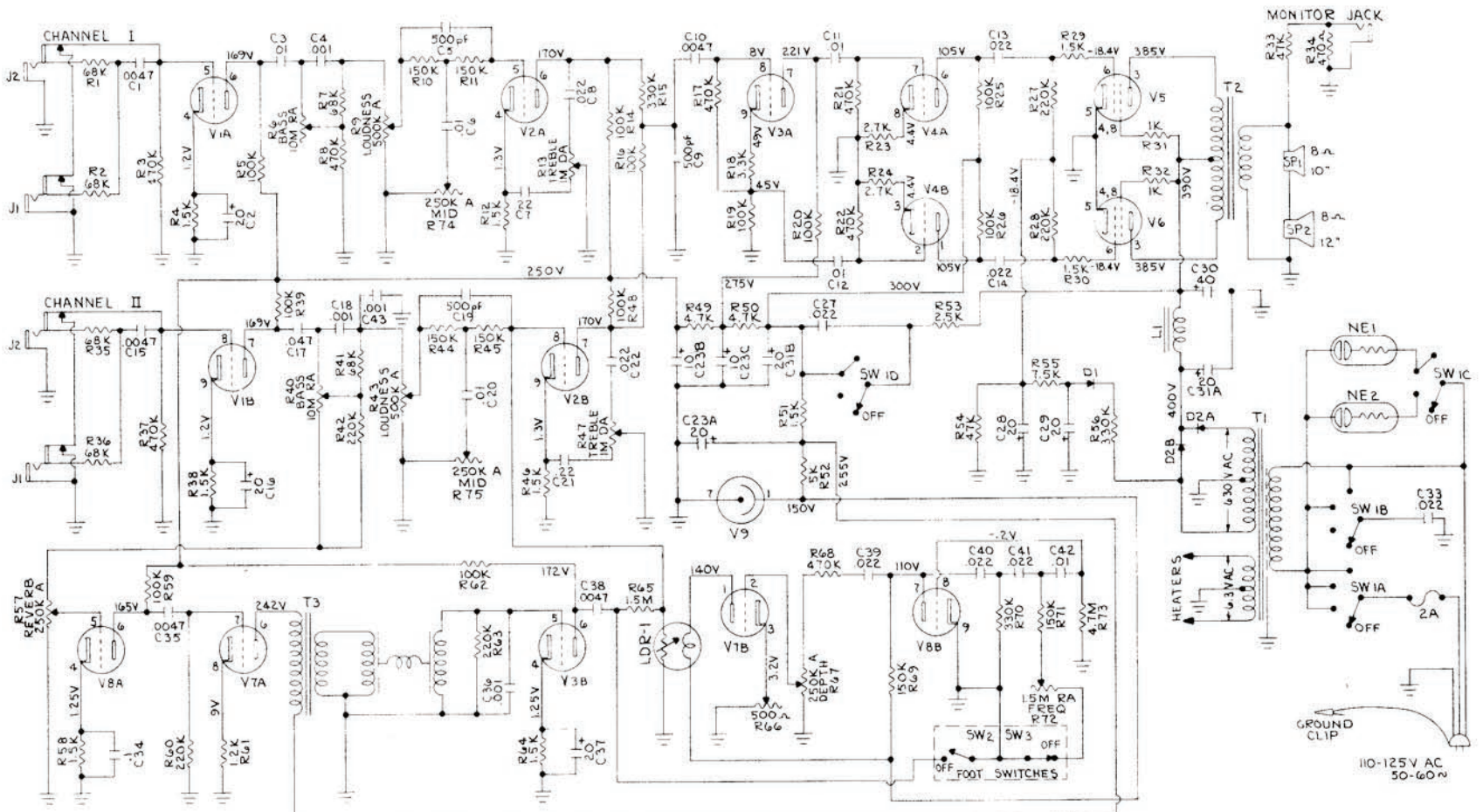

SW-1A,1B,1C,1D	Switch - off, standby, on-on Rotary	SW-78
SW-2,SW-3	Switches - push, push	SW-82403
T1	Power Transformer	TF-100P
T2	Output Transformer	TF-P-6A17-1
T3	Reverberation Transformer	TF-E-6400
L1	Filter Choke	TF-3021-H
D1	Diode 600 PIV, 250 MA	DI-71B
D2A,D2B	Diode 1200 PIV, 250 MA	DI-57
R57,R67,R74,R75	Controls - 250K, G2 Audio(Reverb,Depth)	CBA-811-3701
R9,R43	Controls - 500K, G2 Audio(Loudness)	CBA-811-3707
R6,R40	Controls - 10 meg,G3 RA (Bass)	CBA-811-3710
R72	Control - 1.5 meg, G3 RA (Frequency)	CBA-811-3711
R13,R47	Controls - 1 meg - 30% RA (Treble)	CBA-813-4001
R66	Control - 500 ohm wire wound	CB-23391

Gibson

LANCER

MODEL GA-35RVT AMPLIFIER

INSTRUCTIONS

PRODUCT OF

Gibson Electronics

KALAMAZOO, MICHIGAN

IMPORTANT — READ CAREFULLY BEFORE USE

CAUTION

The Reverb Unit has been carefully constructed. It is, however, a delicate electronic device. Treat it with the same care and respect given a TV set.

Avoid dropping, sudden jolts, or rough handling and it will give excellent service. This beautifully musical Reverberation effect is not to be confused with the repeating signal produced by the mechanical tape recorder style of echo units.

UNPACKING

Amplifiers are carefully packed to prevent damage in shipment. However, upon receipt of the amplifier, examine carefully to determine if there has been breakage of tubes or parts. If damage has occurred during shipment, call the Transportation Company immediately, and place a claim.

TUBES

Make certain all tubes are seated firmly into their respective sockets. Each tube is labeled for proper replacement should any tube be out of its socket. Be especially careful when inserting tubes to see that the pins on the tube are correctly aligned with the holes in the socket before pushing into place. Do not twist tube — push tube straight into socket. It is advisable to check tubes from time to time depending on amount of use and excellence of performance. *Be sure tubes are always returned to proper sockets and seated firmly.*

CAUTION

Damage to the amplifier will result if it is connected to an improper power source. This amplifier is designed to be operated on 105-125 volt, 50-60 cycle alternating current only. The voltage from the power lines should not exceed 125, and the frequency of the current should be either 50 or 60 cycles. When ready to use amplifier, insert the plug on the power cord into the electric outlet and move switch to "on." After approximately one minute for the tubes to heat, the amplifier is ready for use.

A.C. POWER-POLARITY SWITCH

A convenient switch has been provided for performing a total of three functions, turning the amplifier on and off, and selecting the proper polarity of the power source which reduces the A.C. hum and other extraneous noises to a minimum. Two "On" positions have been provided. The hum and hiss level on one of the "On" positions will be noticeably lower - this is the correct "Polarity" for using the amplifier.

FUSE

The fuse used in this Amplifier is a type 3AG of two amperes rating. DO NOT USE FUSES OF HIGHER RATING

SERVICE

If the amplifier is in need of servicing, it should be taken to a reliable radio man. The electrical diagram in this folder should be shown the repairman to assist him in servicing the amplifier.

REVERBERATION — EFFECTIVE IN CHANNEL 2 ONLY

The Reverberation Unit must always be placed on a solid non-vibrating surface or footing when in operation.

Any sudden shock, jolt, or wiggle, when in use, will cause undesirable noise. The resultant clatter of an inadvertant shake or bump is annoying but not necessarily harmful. This delicate sensitivity to shock and vibration is a normal characteristic of the device.

No problem will be encountered while the unit is connected if supporting surface is solid and unit is not moved about. To avoid the unwanted noise, turn the reverberation unit off by pressing the foot switch.

BASS AND TREBLE TONE CONTROLS

A separate control has been provided for control of the bass or low frequencies and for the treble or high frequencies. The use of these two controls allows the player to obtain the maximum combinations of tone from a beautiful clear treble to a deep resonant bass. Setting the "BASS" control at maximum and the "TREBLE" at minimum, produces the deepest, fullest bass tone. Setting the "TREBLE" control at maximum and the "BASS" at minimum produces a chime-like tone rich in higher harmonics and will enable the artist to pick harmonics with greater ease. When both "BASS' and "TREBLE" controls are set at minimum the middle register predominates.

TREMOLO — EFFECTIVE IN CHANNEL 2 ONLY

The Tremolo effect adds another dimension to the Reverberation effect. It can be used either with or without reverberation at the players discretion. The Tremolo is turned on or off by the use of the foot switch. The Tremolo Frequency Range has been carefully set to cover a wide range of Tremolo effects. The Depth of the Tremolo is also variable being controlled by the Depth control.

OPERATION OF MICROPHONE

The high gain and high fidelity characteristics of this Amplifier, permit the use of most of the popular high impedance microphones for public address work. The microphone should be plugged into the Number One jack and it is not recommended that other instruments be used in conjunction with the microphone.

When using a microphone it is important that the Number 280 or similar shielded plug be attached to the cord. The ordinary phone plug with bakelite or other non-shielded cover is not suitable because the leads from the microphone must be completely shielded. Otherwise, objectionable hum will result. Figure A illustrates the proper way to connect the plug to the microphone cable.
To use the microphone, insert the plug in the Number One jack and advance the Loudness control until a feedback squeal or howl is produced on the loudspeaker. Reduce the Loudness control to just below the feedback point. This setting will vary considerably, depending upon the size of the room, its acoustical properties and the distance between the microphone and loudspeaker. Feedback is the limiting factor in all public address installations and is caused when the level of sound from the loudspeakers is sufficient to actuate the microphone. The general rule when setting up the equipment is to place the loudspeaker as far from the microphone as possible.



Figure A

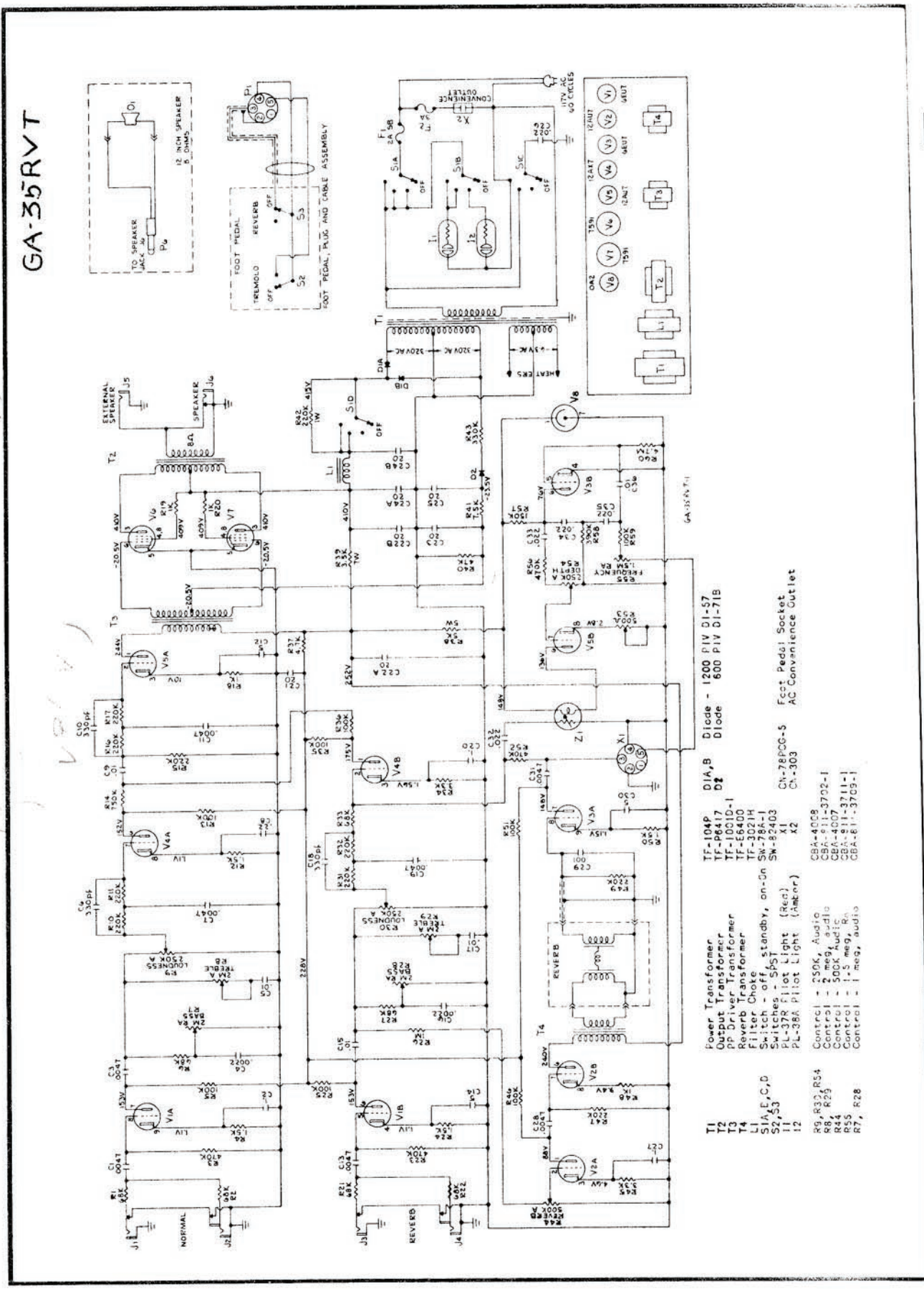
GA-35RVT
T1 Power Transformer TF-104P
T2 Output Transformer TF-P6417
T3 PP Driver Transformer TF-10010-1
T4 Reverb Transformer TF-E6400
L1 Filter Choke TF-3021H
S1A,E,C,D Switch - off, standby, on-On SW-78A-1
S2,S3 Switches - SPST SW-92403
I1 PL-37R Pilot Light (Red) X1 CN-78PCG-5 Foot Pedal Socket
I2 PL-38A Pilot Light (Amber) X2 CN-303 AC Convenience Outlet
D1A,B Diode - 1200 PIV DI-57
D2 Diode 600 PIV DI-71B
R9,R32,R54 Control - 250K, Audio CBA-411-3702-1
R8, R29 Control - 2 meg, Audio CBA-411-3703-1
R44 Control - 500K Audio CBA-4007
R55 Control - 1.5 meg, Audio CBA-411-3711-1
R7, R28 Control - 1 meg, audio CBA-411-3709-1
TO SPEAKER JACK
12 INCH SPEAKER 8 OHMS
FOOT PEDAL
TREMOLO
REVERB
FOOT PEDAL, PLUG AND CABLE ASSEMBLY
CONVENIENCE OUTLET
117V AC 60 CYCLES
EXTERNAL SPEAKER
SPEAKER
NORMAL
REVERB
LOUDNESS
TREBLE
FREQUENCY
REVERB

GIBSON

MODEL GA-40 AMPLIFIER

INSTRUCTIONS

GIBSON INC., KALAMAZOO, MICHIGAN

GA-40

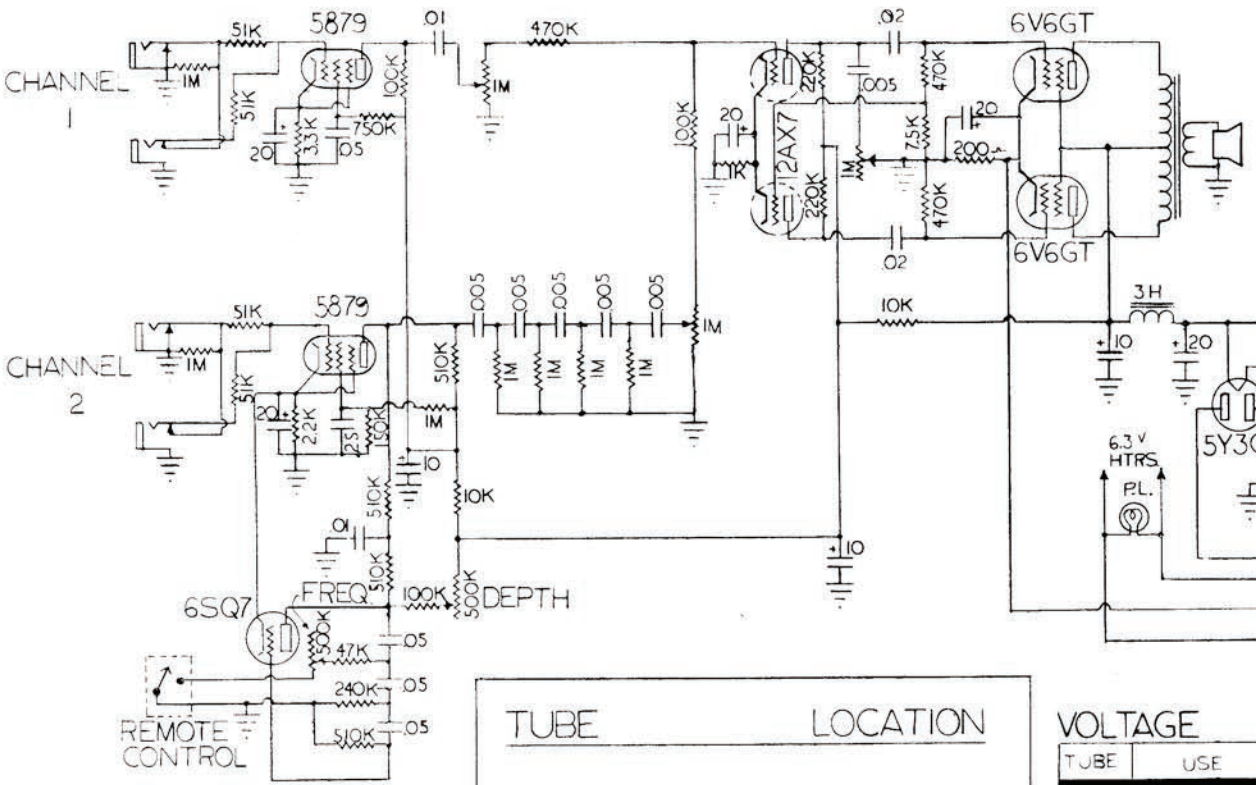

TUBE LOCATION

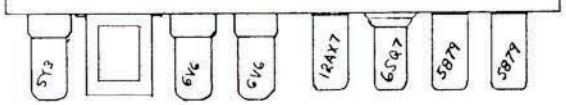

Les Paul

VOLTAGE TABLE*

TUBE	USE	E_{P1}	E_{SG}	E_K	E_{P2}	E_{B+}
5Y3GT	RECT.	300 V AC	—	+315	300 V AC	—
6V6GT	OUT PUT	+305	+310	+18.5	—	+310
12AX7	Ø INVERTER	+135	—	+1.25	+135	+280
5879	CHANNEL 1	+175	+95	+4	—	+265
5879	CHANNEL 2	+180	+32	+1.45	—	+265
6SQ7	TREMOLO OSC.	+130**	—	+1.46	—	—

*VOLTAGES TO CHASSIS WITH 20,000 O.P.V. METER.

**TREMOLO "OFF", DEPTH "MIN."

OPERATION OF INSTRUMENT

When one or two instruments are plugged into the jacks marked "Instruments," three stages of amplification are used. The total gain of both being set with the control marked "Instruments."

The jacks marked "Instruments" or "Microphone" may also be used with any of the GIBSON Electrical Instruments. When used this way, a careful setting of the volume control marked "Microphone" must be made to avoid overload and consequent distortion. This adjustment can easily be made by turning the Volume Control on the guitar or other instrument completely on, and setting the Microphone Control at a point where no distortion occurs when the strings are struck with maximum force. By utilizing the Microphone jacks in this way, two or more instruments can be plugged in, making a total of four electrical instruments which may be used and blended.

The tone control circuit for this Amplifier has been designed to give the player an extremely wide range of tonal coloring.



Figure A

OPERATION OF MICROPHONE

Because of the high power output, high gain and high fidelity characteristics of the GIBSON GA-40 AMPLIFIER it makes an exceptionally fine public address system when used with either the crystal, dynamic or velocity types of microphones.

While the amplifier will operate very well with any of the crystal, medium or high impedance or velocity (ribbon) microphones, it is recommended that a GIBSON Dealer be consulted before investing in a mocrophone. Authorized Gibson Dealers can supply a microphone which has been selected and matched to the amplifier, thus insuring the most faithful reproduction of voice and music.

When using a microphone it is important that the GIBSON 280 or similar shielded plug be attached to the cord. The ordinary phone plug with bakelite or other non-shielded cover is not suitable because the leads from the microphone must be completely shielded. Otherwise, objectionable hum will result. Figure A illustrates the proper way to connect the plug to the microphone cable. To use the microphone, insert the plug in the "Microphone" jack and advance the Microphone volume control until a feedback squeal or howl is produced in the loudspeaker. Reduce the volume control to just below the feedback point. This setting will vary considerably, depending upon the size of the room, its acoustical properties and the distance between the microphone and loudspeaker. Feedback is the limiting factor in all public address installations and is caused when the level of sound from the loudspeakers is sufficient to actuate the microphone. The general rule when setting up the equipment is to place the loudspeaker as far from the microphone as possible.

The volume controls Instruments and Microphone, being completely independent of each other, allow the inputs from the various sources to be "mixed" or blended. Because of this flexibility many unusual effects can easily be worked out.

If the Microphone jacks are not in use, turn the Microphone volume control completely off.

TREMOLO

The Tremolo effect is turned on and off by means of a Push Type Foot Switch. The Tremolo frequency of the Amplifier is controlled by the Variable Control marked "Frequency." The speeds have been carefully set to cover a wide range of Tremolo effects. The depth of the Tremolo is also variable being controlled by the "Depth" Control.

GENERAL

Amplifiers are carefully packed to prevent damage in shipment. However, upon receipt of the Amplifier, examine carefully to determine if there has been breakage of tubes or parts. If damage has occurred during shipment, the Transportation Company should be notified immediately, and a claim placed.

CAUTION

Damage to the Amplifier will result if it is connected to an improper power source. This Amplifier is designed to be operated on 105 - 125 volt, 50 - 60 cycle alternating current ONLY. Check the voltage from the power lines to determine that it is not over 125 volts, and that the frequency of the current is either 50 or 60 cycles.

When ready to use power, plug the power cord into the electric outlet and move the switch to the ON position. Approximately one minute is required for the tubes to heat before the Amplifier is ready for use.

TUBES

Check tubes for proper positioning before placing the Amplifier in operation. All tubes have been tested and proved satisfactory before shipment.

SERVICE

If the Amplifier is in need of servicing, consult a reliable radio man. The electrical diagram herein should be shown to the repairman to assist him in servicing the Amplifier.

FUSE

The fuse used in the GIBSON GA-40 AMPLIFIER is a type 3AG of three ampere rating. DO NOT USE A FUSE OF HIGHER RATING.

Gibson

MODEL GA-40T AMPLIFIER

INSTRUCTIONS

PRODUCT OF

Gibson Electronics

KALAMAZOO, MICHIGAN

GENERAL

Amplifiers are carefully packed to prevent damage in shipment. However, upon receipt of the Amplifier, examine carefully to determine if there has been breakage of tubes or parts. If damage has occurred during shipment, the Transportation Company should be notified immediately, and a claim placed.

CAUTION

Damage to the Amplifier will result if it is connected to an improper power source. This Amplifier is designed to be operated on 105 - 125 volt, 50 - 60 cycle alternating current ONLY. Check the voltage from the power lines to determine that it is not over 125 volts, and that the frequency of the current is either 50 or 60 cycles.

TUBES

Check tubes for proper positioning before placing the Amplifier in operation. All tubes have been tested and proved satisfactory before shipment.

A.C. POWER-POLARITY SWITCH

A convenient switch has been provided for performing a total of three functions, turning the amplifier on and off, putting the amplifier in "Standby" and selecting the proper polarity of the power source which reduces the A.C. hum and other extraneous noises to a minimum. In the "Standby" position the amplifier is kept "warmed up" and ready to play at the instant the switch is advanced to the "On" positions. Two "On" positions have been provided. The hum and hiss level on one of the "On" positions will be noticeably lower — this is the correct "Polarity" for using the amplifier.

In locations of extremely high noise levels, clipping the "Ground Clip" to a grounded object will greatly reduce objectionable noise and hum.

TREMOLO — EFFECTIVE IN CHANNEL 2 ONLY

The Tremolo effect is turned on and off by means of a Push Type Foot Switch. The Tremolo frequency of the Amplifier is controlled by the Variable Control marked "Frequency." The speeds have been carefully set to cover a wide range of Tremolo effects. The depth of the Tremolo is also variable being controlled by the "Depth" Control.

OPERATION OF MICROPHONE

The high gain and high fidelity characteristics of this Amplifier, permit the use of most of the popular high impedance microphones for public address work. The microphone should be plugged into the Number One Jack of Channel 1.

If the Microphone jacks are not in use, turn the Channel one Loudness control completely off.



Figure A

When using a microphone it is important that a number 280 or similar shielded plug be attached to the cord. The ordinary phone plug with bakelite or other non-shielded cover is not suitable because the leads from the microphone must be completely shielded. Otherwise, objectionable hum will result. Figure A illustrates the proper way to connect the plug to the microphone cable. To use the microphone, insert the plug in the "Microphone" jack and advance the Microphone volume control until a feedback squeal or howl is produced on the loudspeaker. Reduce the volume control to just below the feedback point. This setting will vary considerably, depending upon the size of the room, its acoustical properties and the distance between the microphone and loudspeaker. Feedback is the limiting factor in all public address installations and is caused when the level of sound from the loudspeakers is sufficient to actuate the microphone. The general rule when setting up the equipment is to place the loudspeaker as far from the microphone as possible.

OPERATION OF INSTRUMENTS

This amplifier is equipped with a total of four input jacks, two in each channel. In normal operation the instrument would be plugged into channel two. The input jacks of channel two are numbered 1. and 2. and when plugging in the instrument cords, they should be inserted in their respective jacks — that is, first instrument into the No. 1 jack and the second instrument into the No. 2 jack.

The gain for each channel is adjusted by the control marked "Loudness" located adjacent to the input jacks. The tonal coloring can be controlled by use of the "Tone" control.

FUSE

The fuse used in this Amplifier is a type 3AG of three amperes rating. DO NOT USE FUSES OF HIGHER RATING

SERVICE

If the amplifier is in need of servicing, it should be taken to a reliable radio man. The electrical diagram in this folder should be shown the repairman to assist him in servicing the amplifier.

GA-40T

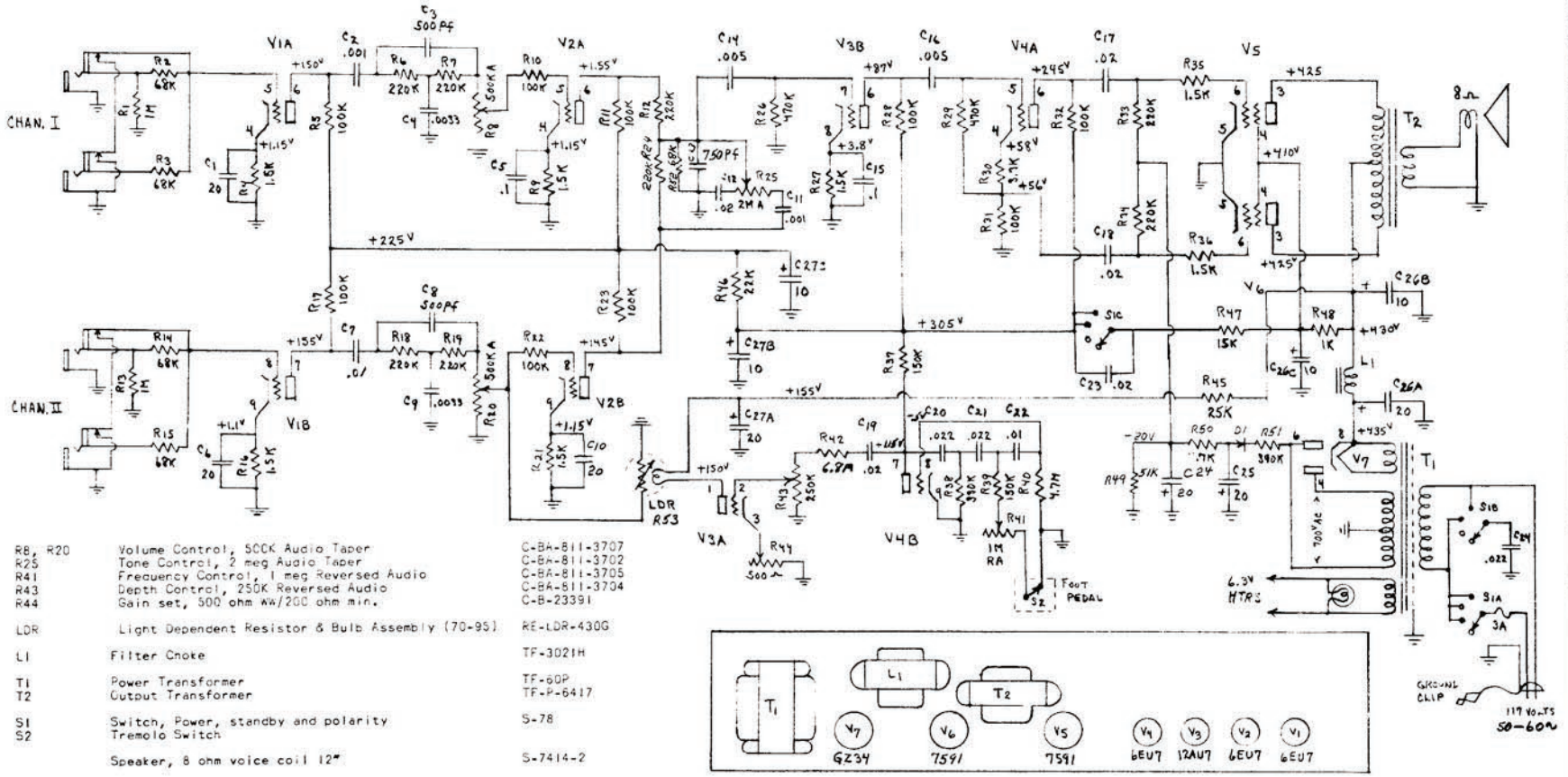

R8, R20	Volume Control, 500K Audio Taper	C-BA-811-3707
R25	Tone Control, 2 meg Audio Taper	C-BA-811-3702
R41	Frequency Control, 1 meg Reversed Audio	C-BA-811-3705
R43	Depth Control, 250K Reversed Audio	C-BA-811-3704
R44	Gain set, 500 ohm WW/200 ohm min.	C-B-23391
LDR	Light Dependent Resistor & Bulb Assembly (70-95)	RE-LDR-430G
LI	Filter Choke	TF-3021H
TI	Power Transformer	TF-60P
T2	Output Transformer	TF-P-6417
SI	Switch, Power, standby and polarity	S-78
S2	Tremolo Switch	
	Speaker, 8 ohm voice coil 12"	S-7414-2

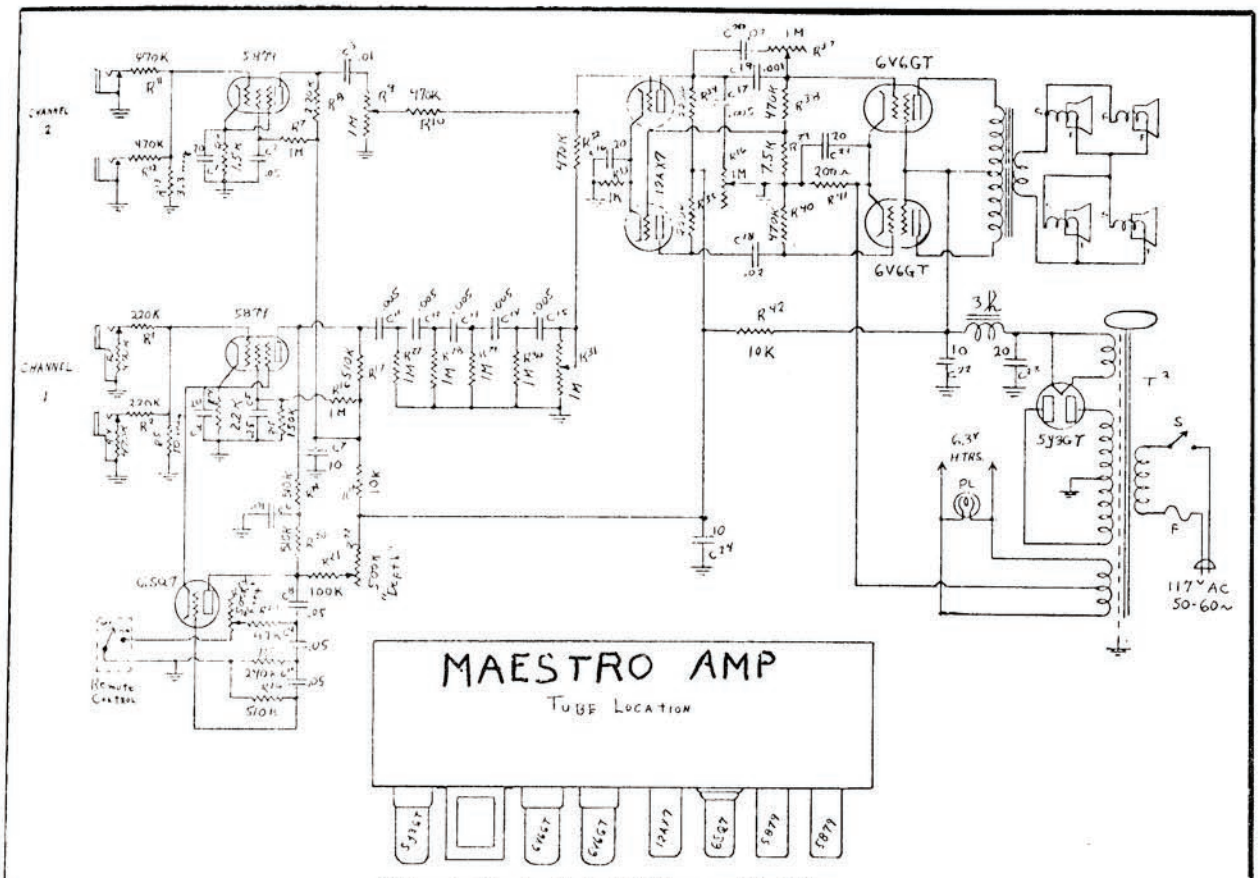

Voltages to Chassis with 20,000 Ohms per Volt, Meter

Tube	Use	E_{p_1}	E_{scr}	E_k	E_{p_2}	E_B
5Y3	Rectifier	300V AC	.....	+315	300V AC	.....
6V6	Output	+305	+310	+18.5	.....	+310
12AX7	Phase Inverter	+135	.....	+1.25	+135	+275
5879	Channel 2	+88	+50	+1.53	.....	+262
5879	Channel 1	+73	+31	+1.2	.....	+262
6SQ7	Tremolo	+97*	.....	+1.2	.....	+275

*Tremolo "Off" and Depth Control at "Min."

PARTS LIST

$R_{1,2,8,34,35}$	220 K	1 Watt	10%
$R_{3,4,10,11,32}$	470 K	1 Watt	20%
R_5	10 meg.	½ Watt	20%
R_6	1.5 K	1 Watt	10%
$R_{7,16,27,28,29,30}$	1 meg	1 Watt	10%
$R_{9,31,36}$	1 meg	Volume Control	
R_{13}	3.3 meg.	1 Watt	20%
R_{14}	2.2 K	1 Watt	5%
R_{15}	150 K	½ Watt	5%
$R_{17,26}$	510 K	1 Watt	5%
$R_{18,42}$	10 K	1 Watt	20%
$R_{19,20}$	510 K	1 Watt	10%
R_{21}	100 K	1 Watt	10%
$R_{22,24}$	500 K	Volume Control	
R_{23}	*47 K	1 Watt	
R_{25}	240 K	1 Watt	5%
R_{33}	1 K	1 Watt	20%
R_{37}	1 meg.	Volume Control	
R_{39}	7.5 K	1 Watt	5%
R_{41}	200 ohm	7 Watts	10%
$R_{38,40}$	470 K	1 Watt	5%
$C_{1,4,16,21}$	20 mfd.	25 WV	
$C_{2,8,9,10}$	.05 mfd.	600 V	
$C_{3,6}$	.01 mfd.	600 V	
C_5	.25 mfd.	200 V	
$C_{7,24}$	10 mfd.	450 V	
$C_{11,12,13,14,15,17}$	.005 mfd.	600 V	
$C_{18,20}$	.02 mfd.	600 V	
C_{19}	.001 mfd.	600 V	
C_{22}	10 mfd.	450 V	
C_{23}	20 mfd.	450 V	
T_1	Output Trans.	(GA-10-02)	
T_2	Power Trans.	(GA-10-P)	
S	Toggle Switch	SPST	
F	Fuse	3 Amp. (3 AG)	
PL	Type 47		

*This Value Picked at Factory

Gibson

SATURN

MODEL GA-45 RVT AMPLIFIER

INSTRUCTIONS

PRODUCT OF

Gibson Electronics

KALAMAZOO, MICHIGAN

IMPORTANT — READ CAREFULLY BEFORE USE

CAUTION

The Reverb Unit has been carefully constructed. It is, however, a delicate electronic device. Treat it with the same care and respect given a TV set.

Avoid dropping, sudden jolts, or rough handling and it will give excellent service. This beautifully musical Reverberation effect is not to be confused with the repeating signal produced by the mechanical tape recorder style of echo units.

UNPACKING

Amplifiers are carefully packed to prevent damage in shipment. However, upon receipt of the amplifier, examine carefully to determine if there has been breakage of tubes or parts. If damage has occurred during shipment, call the Transportation Company immediately, and place a claim.

TUBES

Make certain all tubes are seated firmly into their respective sockets. Each tube is labeled for proper replacement should any tube be out of its socket. Be especially careful when inserting tubes to see that the pins on the tube are correctly aligned with the holes in the socket before pushing into place. Do not twist tube — push tube straight into socket. It is advisable to check tubes from time to time depending on amount of use and excellence of performance. *Be sure tubes are always returned to proper sockets and seated firmly.*

CAUTION

Damage to the amplifier will result if it is connected to an improper power source. This amplifier is designed to be operated on 105-125 volt, 50-60 cycle alternating current only. The voltage from the power lines should not exceed 125, and the frequency of the current should be either 50 or 60 cycles. When ready to use amplifier, insert the plug on the power cord into the electric outlet and move switch to "on." After approximately one minute for the tubes to heat, the amplifier is ready for use.

A.C. POWER-POLARITY SWITCH

A convenient switch has been provided for performing a total of three functions, turning the amplifier on and off, and selecting the proper polarity of the power source which reduces the A.C. hum and other extraneous noises to a minimum. Two "On" positions have been provided. The hum and hiss level on one of the "On" positions will be noticeably lower - this is the correct "Polarity" for using the amplifier.

FUSE

The fuse used in this Amplifier is a type 3AG of 2 amperes Slo-Blo rating. DO NOT USE FUSES OF HIGHER RATING.

SERVICE

If the amplifier is in need of servicing, it should be taken to a reliable radio man. The electrical diagram in this folder should be shown the repairman to assist him in servicing the amplifier.

REVERBERATION — EFFECTIVE IN CHANNEL 2 ONLY

The Reverberation Unit must always be placed on a solid non-vibrating surface or footing when in operation.

Any sudden shock, jolt, or wiggle, when in use, will cause undesirable noise. The resultant clatter of an inadvertant shake or bump is annoying but not necessarily harmful. This delicate sensitivity to shock and vibration is a normal characteristic of the device.

No problem will be encountered while the unit is connected if supporting surface is solid and unit is not moved about. To avoid the unwanted noise, turn the reverberation unit off by pressing the foot switch.

BASS AND TREBLE TONE CONTROLS

A separate control has been provided for control of the bass or low frequencies and for the treble or high frequencies. The use of these two controls allows the player to obtain the maximum combinations of tone from a beautiful clear treble to a deep resonant bass. Setting the "BASS" control at maximum and the "TREBLE" at minimum, produces the deepest, fullest bass tone. Setting the "TREBLE" control at maximum and the "BASS" at minimum produces a chime-like tone rich in higher harmonics and will enable the artist to pick harmonics with greater ease. When both "BASS' and "TREBLE" controls are set at minimum the middle register predominates.

TREMOLO — EFFECTIVE IN CHANNEL 2 ONLY

The Tremolo effect adds another dimension to the Reverberation effect. It can be used either with or without reverberation at the players discretion. The Tremolo is turned on or off by the use of the foot switch. The Tremolo Frequency Range has been carefully set to cover a wide range of Tremolo effects. The Depth of the Tremolo is also variable being controlled by the Depth control.

OPERATION OF MICROPHONE

The high gain and high fidelity characteristics of this Amplifier, permit the use of most of the popular high impedance microphones for public address work. The microphone should be plugged into the Number One jack and it is not recommended that other instruments be used in conjunction with the microphone.

When using a microphone it is important that the Number 280 or similar shielded plug be attached to the cord. The ordinary phone plug with bakelite or other non-shielded cover is not suitable because the leads from the microphone must be completely shielded. Otherwise, objectionable hum will result. Figure A illustrates the proper way to connect the plug to the microphone cable.
To use the microphone, insert the plug in the Number One jack and advance the Loudness control until a feedback squeal or howl is produced on the loudspeaker. Reduce the Loudness control to just below the feedback point. This setting will vary considerably, depending upon the size of the room, its acoustical properties and the distance between the microphone and loudspeaker. Feedback is the limiting factor in all public address installations and is caused when the level of sound from the loudspeakers is sufficient to actuate the microphone. The general rule when setting up the equipment is to place the loudspeaker as far from the microphone as possible.



Figure A

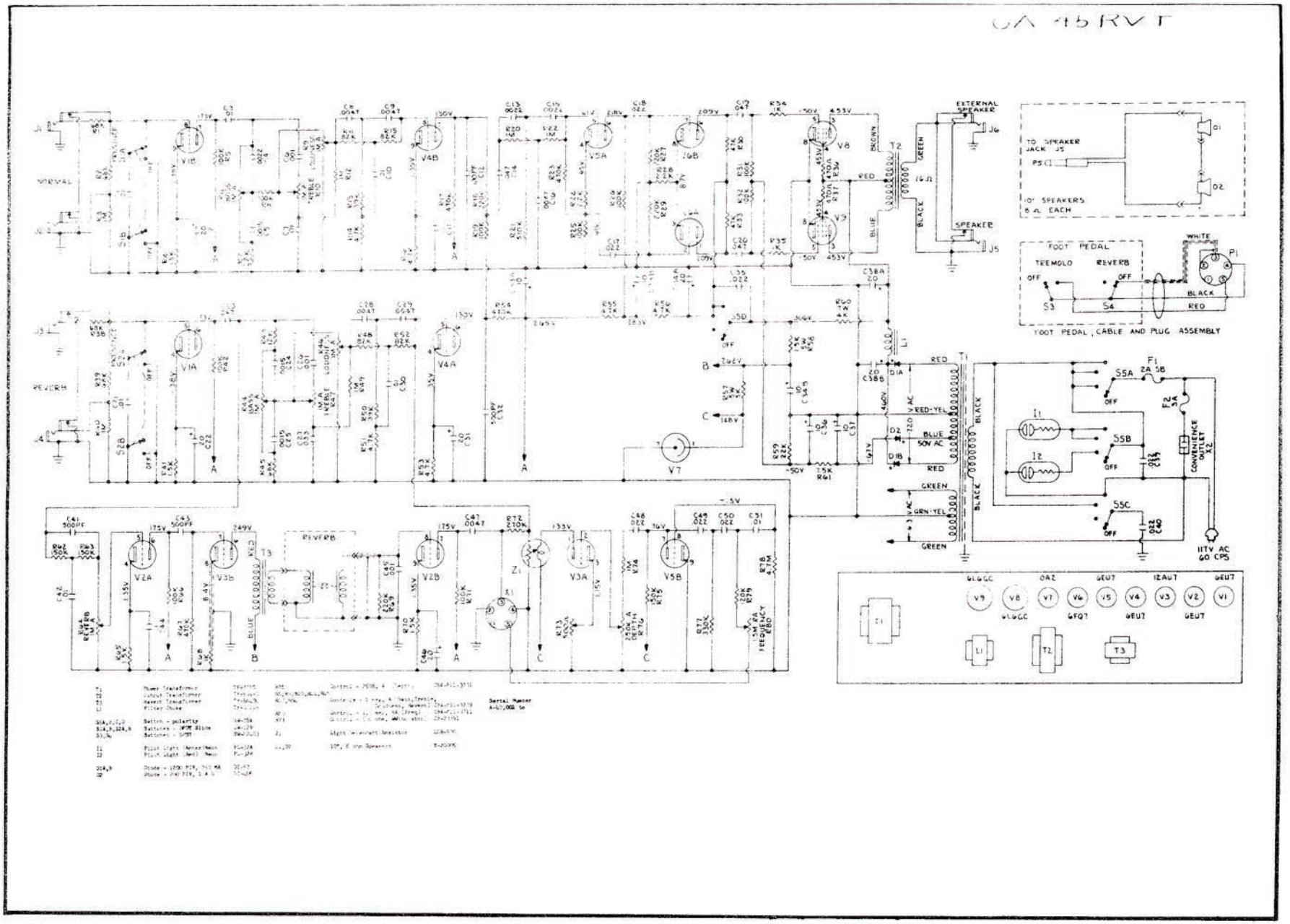
OA 45RVT
NORMAL
REVERB
EXTERNAL SPEAKER
SPEAKER
TO SPEAKER JACK J5
10" SPEAKERS 8 Ω EACH
FOOT PEDAL
TREMOLO
REVERB
OFF
WHITE
BLACK
RED
FOOT PEDAL, CABLE AND PLUG ASSEMBLY
CONVENIENCE OUTLET X2
117V AC 60 CPS
6L6GC
OA2
6EU7
12AU7
6EU7
6FQ7
Serial Number
A-40,000 to

Super Maestro

ACCORDION AMPLIFIER

GA-46

INSTRUCTIONS

PRODUCT OF ELECTRONICS DIVISION, GIBSON INC., KALAMAZOO, MICH.

GA-46

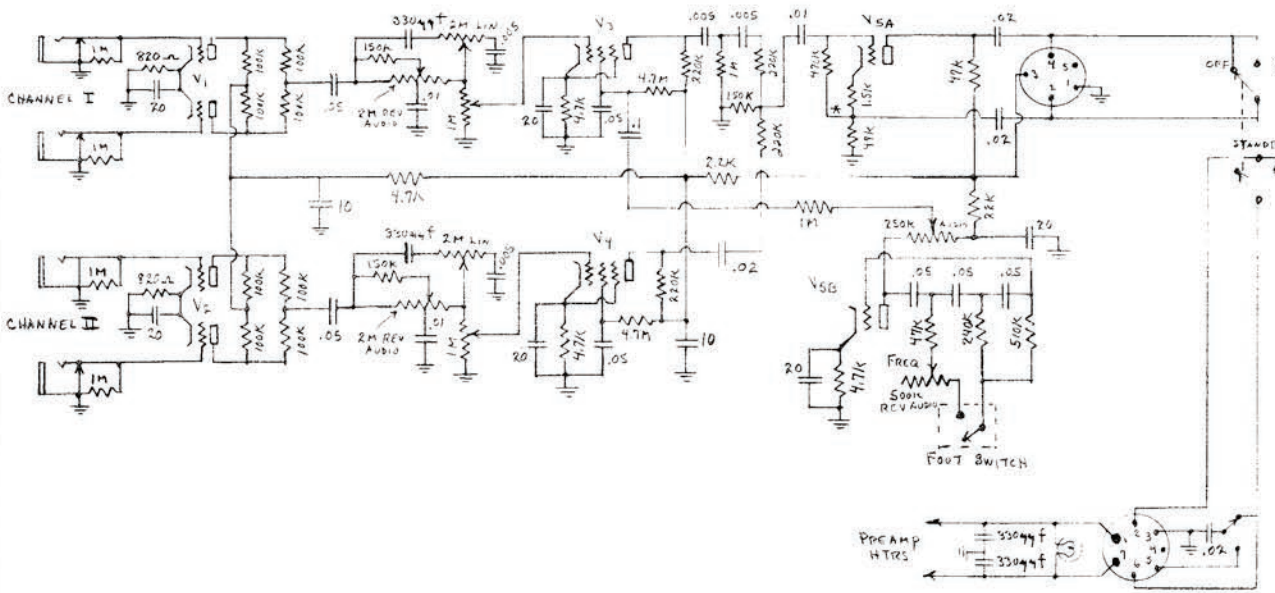

		Ep	Esg	Eg	Ek
V1 - 12AX7	CHAN I PREAMP	+150	—	0	+1.2
V2 - 12AX7	" II "	+150	—	0	+1.2
V3 - 5879	MIXER AMP	+180	+32	0	+1.15
V4 - 5879	AMPLIFIER	+180	+32	0	+1.15
V5A - ½ 12AX7	PHASE SPLITTER	+210	—	*46	+47
V5B - ½ 12AX7	TREM. OSC.	450	—	0	+1.7
V6 - 6SN7	DRIVER	112	—	0	+9.2
V7 - 6550	PWR AMP	560	+265	0	+23.5
V8 - 6550	" "	+560	+265	0	+23.5
V9 - 6V6	VOLTAGE REG.	+565	+565	+228	+265
V10 - GZ34	RECTIFIER	455 RMS	—	—	+570

DC VOLTAGES TO CHASSIS WITH 11 MEG VTVM AND TREMOLO OSCILLATOR "OFF"

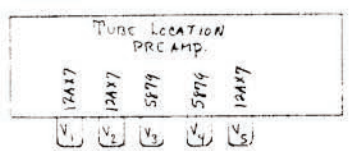

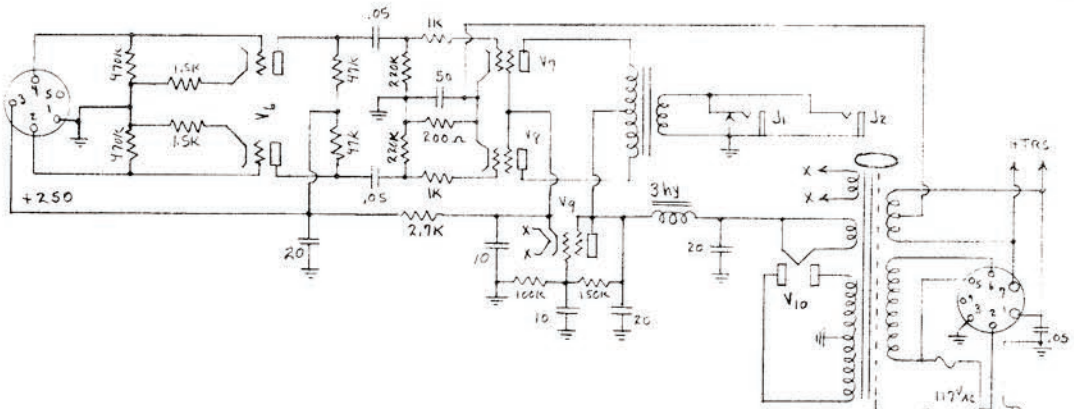

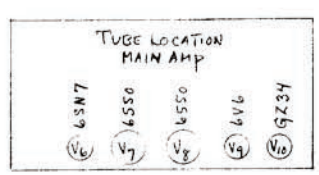

SUPER MAESTRO AMPLIFIER — GA-46

The Gibson GA-46 Super Maestro is a new high gain, high fidelity twin 12" speaker amplifier with built-in tremolo especially designed for amplified accordions. Engineered to produce the full powerful tones of the lower and middle frequency ranges. Amazingly free from distortion with plenty of reserve volume for any use. Features a clear, powerful, undistorted performance; sturdy, compact, portable construction; and a rich attractive performance. The use of especially designed speakers, premium tubes, deluxe transformers, and other top quality components insure great reserve power, top performance and trouble free service.

This deluxe, premium quality, amplifier will produce the results and dependability you need — study and try its many features — read carefully what it can do and how you can insure its top quality performance through proper care.

FIDELITY

The GA-46, Super Maestro, is a High Fidelity Amplifier with 60 watts output with less than 3% distortion at a full 60 watts.

WIDE RANGE SPEAKERS

Equipped with two very heavy-duty 12" twin cone speakers developed for this amplifier by a famous research laboratory, the full resonance speakers give a realistic "Living Sound" reproduction unmatched by other speakers.

PRE-AMPLIFIER

The amplifier is designed and constructed in two units. The pre-amplifier with the controls is mounted in the top of the case, while the main amplifier and power supply is mounted in the bottom of the case. This construction brings the controls to a position of maximum convenience and more evenly distributes the weight. This allows for excellent heat dissipation.

TWO CHANNELS

The pre-amplifier is divided into two separate channels with two input jacks in each channel. The exclusive Terrace design indicates the channel separation at a glance. Each channel has an independent set of volume, treble and bass voicing controls.

Channel 1 — Reproduces mid-range and low frequencies with excellent definition — also suitable for lead instruments that require good high frequency response for best results. The tremolo is operative in this channel.

Channel 2 — Reproduces mid-range and low frequency notes — as low as 40 cycles with a depth and clarity that is seldom equalled with portable equipment. This channel recommended if microphone is used.

Complete isolation is provided between the two channels so that entirely different settings of tone and volume controls can be used without interaction. Thus a combination of accordions, accordions with instruments such as electric bass, guitars, mandolins, etc. or accordions and microphones may be used successfully together. This permits two different styles in any combination — with individual tone and volume settings for each channel. The surplus power of the amplifier insures ample volume level for each instrument, but care should be used to avoid rattling the lights or other loose items in the room.

TREMOLO

Channel 1 of the GA-46 Super Maestro Amplifier has a very effective new high level tremolo, which is controlled by a remote on-off push type foot switch. The tremolo frequency of the amplifier is controlled by the variable control marked "Frequency." The speeds have been carefully set to cover a wide range of tremolo effects. The depth of the tremolo is also variable, being controlled by the "Depth" control.

VOICING CONTROLS

Each channel has its own set of Bass and Treble Voicing controls. With the Treble and Bass controls at the middle or upright setting, each channel will reproduce a medium voicing within its particular range. This can be varied to produce more treble or more bass within the range of each channel by setting the voicing controls to the desired tone quality.

EXTENSION SPEAKER JACKS

Equipped with switching jacks for extension speakers. The extension speaker can be plugged into the jack away from the baffle, and both the regular speaker and the extension speaker will disperse the sound; or, the extension speaker can be plugged into the other jack closest to baffle after removing the plug from the regular speaker and only the extension speaker will disperse the sound. Replace regular speaker plug into jack nearest baffle when amplifier only is used.

STANDBY SWITCH

The 110 Volt power switch has three positions: OFF, STANDBY, and ON. In the Standby position, the tubes are lighted and heating, but the speaker is disconnected, eliminating any possible accidental sounds. Movement of the switch from Standby to ON gives instant response without waiting to warm up.

OPERATION OF THE MICROPHONE

Because of the high power output, high gain and high fidelity characteristics of the GIBSON GA-46 Super Maestro Amplifier, it makes an exceptionally fine public address system when used with either the crystal, dynamic, or velocity types of microphones. Channel two is recommended for microphone use.

While the Amplifier will operate very well with any of the crystal, medium or high impedance dynamic or velocity (ribbon) microphones, it is recommended that a GIBSON Dealer be consulted before investing in a microphone. Authorized Gibson Dealers can supply a microphone which has been selected and matched to the amplifier, thus insuring the most faithful reproduction of voice and music.

When using a microphone it is important that a shielded plug be attached to the cord. The ordinary phone plug with bakelite or other non-shielded cover is not suitable because the leads from the microphone must be completely shielded. Otherwise objectional hum will result. Figure B illustrates the proper way to connect the plug to the microphone cable. To use the microphone, insert the plug in the MICROPHONE socket and advance the Microphone Volume Control until a feedback squeal or howl is produced by the loudspeakers. Reduce the Volume Control to just below the feedback point. This setting will vary considerably depending upon the size of the room, its acoustical properties and the distance between the microphone and the loudspeaker. Feedback is the limiting factor in all public address installations and is caused when the level of sound from the loudspeakers is sufficient to actuate the microphone. The general rule when setting up the equipment is to place the loudspeaker as far from the microphone as possible.



Amplifiers are carefully packed to prevent damage in shipment. However, upon receipt of the Amplifier, examine carefully to determine if there has been breakage of tubes or parts. If damage has occured during shipment, the Transportation Company should be notified immediately, and a claim placed.

CAUTION

Damage to the Amplifier will result if it is connected to an improper power source. This amplifier is designed to be operated on 105 - 125 volt, 50 - 60 cycle alternating current ONLY. Check the voltage from the power lines to determine that it is not over 125 volts, and the frequency of the current is either 50 or 60 cycles.

When ready to use power, plug the power cord into the electric outlet and move the switch to the ON position. Approximately one minute is required for the tubes to heat before the Amplifier is ready to use.

TUBES

Check tubes for proper positioning before placing the Amplifier in operation. All tubes have been tested and proved satisfactory before shipment.

GROUND CLIP

The AC Line Cord is equipped with an external Ground Clip that can be attached to any grounded object such as a water pipe, steam radiator, or to a grounded circuit such as is used in recording and broadcasting studios. This reduces extraneous noises and hum — a feature very essential for top notch performance.

SERVICE

If the Amplifier is in need of servicing, consult a reliable radio man. The electrical diagram herein should be shown to the repairman to assist him in servicing the Amplifier.

FUSE

The fuse in the GA-46 Super Maestro Amplifier is a type AG Slo-Blo of three amperes rating. DO NOT USE A FUSE OF HIGHER RATING.

GIBSON

MODEL GA-50 AMPLIFIER

INSTRUCTIONS

GIBSON INC., KALAMAZOO, MICH.

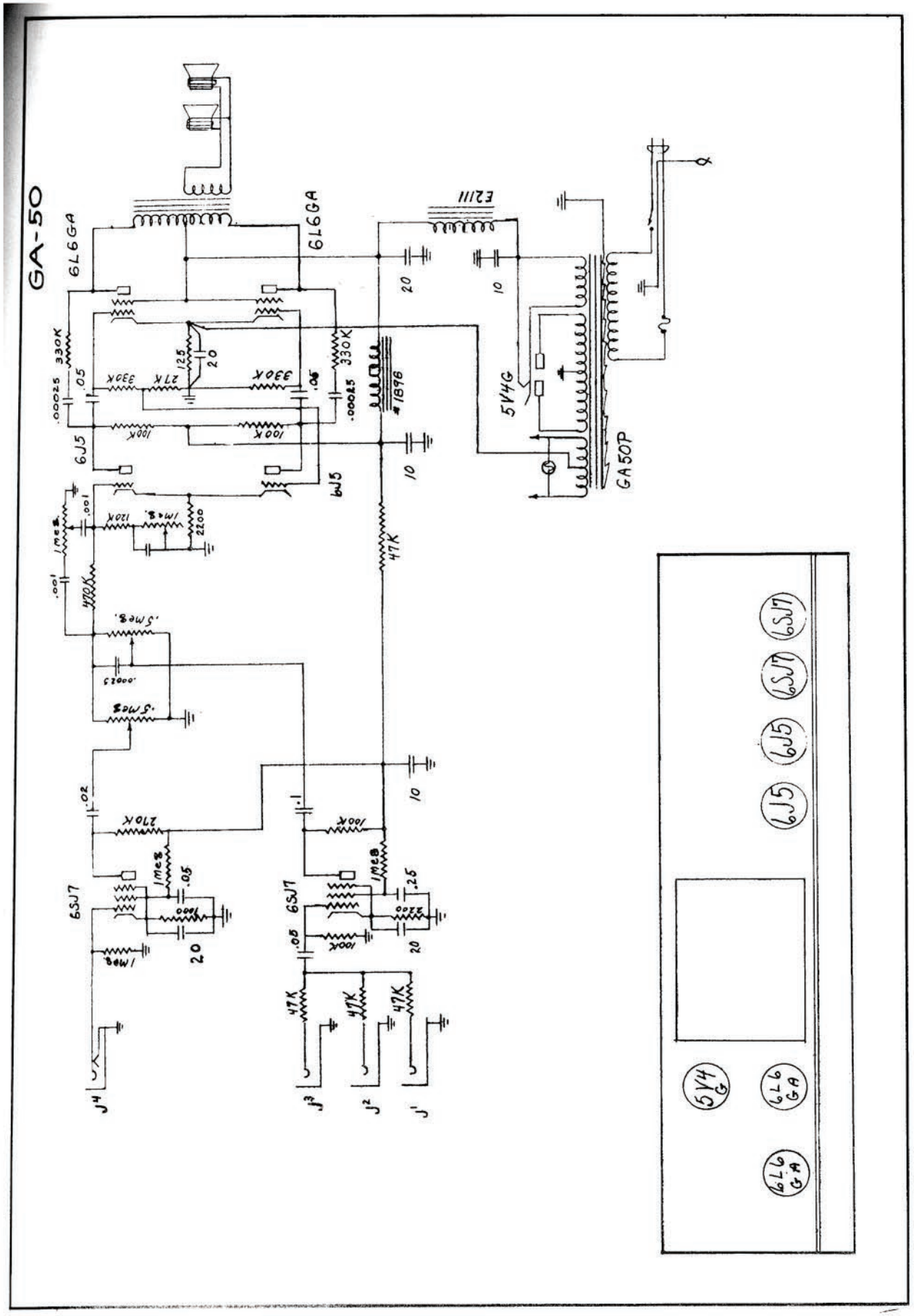
GA-50
6L6GA
6L6GA
E2111
5V4G
GA50P
6J5
6J5
6SJ7
6SJ7
#1896
J4
J3
J2
J1
6J5
6J5
6SJ7
6SJ7
5V4G
6L6GA
6L6GA



FIGURE A

OPERATION OF INSTRUMENT

When one, two, or three instruments are plugged into the jacks marked "Instruments", three stages of amplification are used. The total gain of all three circuits being set with the control marked "Instruments".

The socket marked MICROPHONE may also be used with any of the GIBSON electrical instruments. When used this way a careful setting of the volume control marked MICROPHONE must be made to avoid overload and consequent distortion. This adjustment can be easily made by turning the volume control on the guitar or other instrument all the way on and setting the MICROPHONE control at the point where no distortion occurs when the strings are struck with maximum force. By utilizing the MICROPHONE socket in this way a fourth instrument can be plugged in, making a total of four electrical instruments which may be used and blended.

The tone control circuits for this amplifier have been designed to give the player an extremely wide range of tonal coloring.

BASS AND TREBLE TONE CONTROLS

A separate control has been provided for control of the bass or low frequencies and for the treble or high frequencies. The use of these two controls allows the player to obtain the maximum combinations of tone from a beautiful clear treble to a deep resonant bass. Setting the "BASS" control at maximum and the "TREBLE" at minimum, produces the deepest, fullest bass tone. Setting the "TREBLE" control at maximum and the "BASS" at minimum produces a chime-like tone rich in higher harmonics and will enable the artist to pick harmonics with greater ease. When both "BASS" and "TREBLE" controls are set at minimum the middle register predominates.

OPERATION OF THE MICROPHONE

Because of the high power output, high gain and high fidelity characteristics of the GIBSON GA-50 Amplifier it makes an exceptionally fine public address system when used with either the crystal, dynamic or velocity types of microphones.

While the amplifier will operate very well with any of the crystal, medium or high impedance dynamic or velocity (ribbon) microphones, it is recommended that, before investing in a microphone, you consult your GIBSON dealer. Authorized GIBSON dealers can supply you with a microphone which has been selected and matched to the amplifier, thus insuring the most faithful reproduction of voice and music.

When using a microphone it is important that the GIBSON 75A or similar shielded plug be attached to the cord. The ordinary phone plug with bakelite or other non-shielded cover is not suitable because the leads from the microphone must be completely shielded. Otherwise objectionable hum will result. Figure A illustrates the proper way to connect the plug to the microphone cable. To use the microphone, insert the plug in the MICROPHONE socket and advance the MICROPHONE volume control until a feedback squeal or howl is produced in the loudspeaker. Reduce the volume control to just below the feedback point. This setting will vary considerably depending upon the size of the room, its acoustical properties and the distance between the microphone and loudspeaker. Feedback is the limiting factor in all public address installations and is caused when the level of sound from the loudspeakers is sufficient to actuate the microphone. The general rule when setting up the equipment is to place the loudspeaker as far from the microphone as possible.

(over)

OPERATION OF THE MICROPHONE (Cont'd)

The volume controls INSTRUMENTS and MICROPHONE, being completely independent of each other, allow the inputs from the various sources to be "mixed" or blended. Because of this flexibility many unusual effects can be easily worked out.

If the MICROPHONE socket is not in use turn the MICROPHONE volume control all the way off.

GENERAL

Amplifiers are carefully packed to prevent damage in shipment. However, upon receipt of the amplifier, look it over carefully to make sure there has been no breakage of tubes or parts. If you find that damage has occurred during shipment, we suggest the Transportation Company be called immediately, and a claim placed.

CAUTION

Damage to the amplifier will result if it is connected to an improper power source. This amplifier is designed to be operated on 105-125 volt, 50-60 cycle alternating current only. Make sure the voltage from the power lines is not over 125, and that the frequency of the current is either 50 or 60 cycles. When ready to turn on power, plug the power cord into the electric outlet and turn on the switch. Wait approximately one minute for the tubes to heat, and the amplifier is ready for use.

TUBES

Be sure tubes are in their proper positions before placing the amplifier in operation. All tubes have been tested and proved satisfactory before shipment.

GROUND CLIP

The AC line cord is equipped with an external Ground Clip that can be attached to any grounded object such as a water pipe, steam radiator, or to a grounded circuit such as used in recording and broadcasting studios. This reduces extraneous noises and hum -- a feature very essential for top notch performance.

SERVICE

If the amplifier is in need of servicing, we suggest it be taken to a reliable radio man. The electrical diagram attached should be shown the repairman to assist him in servicing the amplifier.

* * * *

The fuse in the GA-50 Amplifier is a type AG of three ampere rating. DO NOT USE FUSES OF HIGHER RATING.

GIBSON, INC.
KALAMAZOO, MICH.
GA-50T
SCHEMATIC DIAGRAM
DRAWN C.E.K. 8-27-60
CHECKED
GROUND CLIP
3A
10hy 175ma
30hy 30ma
V1 - 6SJ7
V2 - 6SJ7
V3 - 6SJ7
V4 - 6SN7
V5 - 6L6GA
V6 - 6L6GA
V7 - 6SL7
V8 - 5V4G
V1
V2
V3
V4A
V4B
V5
V6
V7A
V7B
V8
J1
J2
J3
J4

GIBSON

MODEL GA-55 AMPLIFIER

INSTRUCTIONS

GIBSON INC., KALAMAZOO, MICH.

GA-55

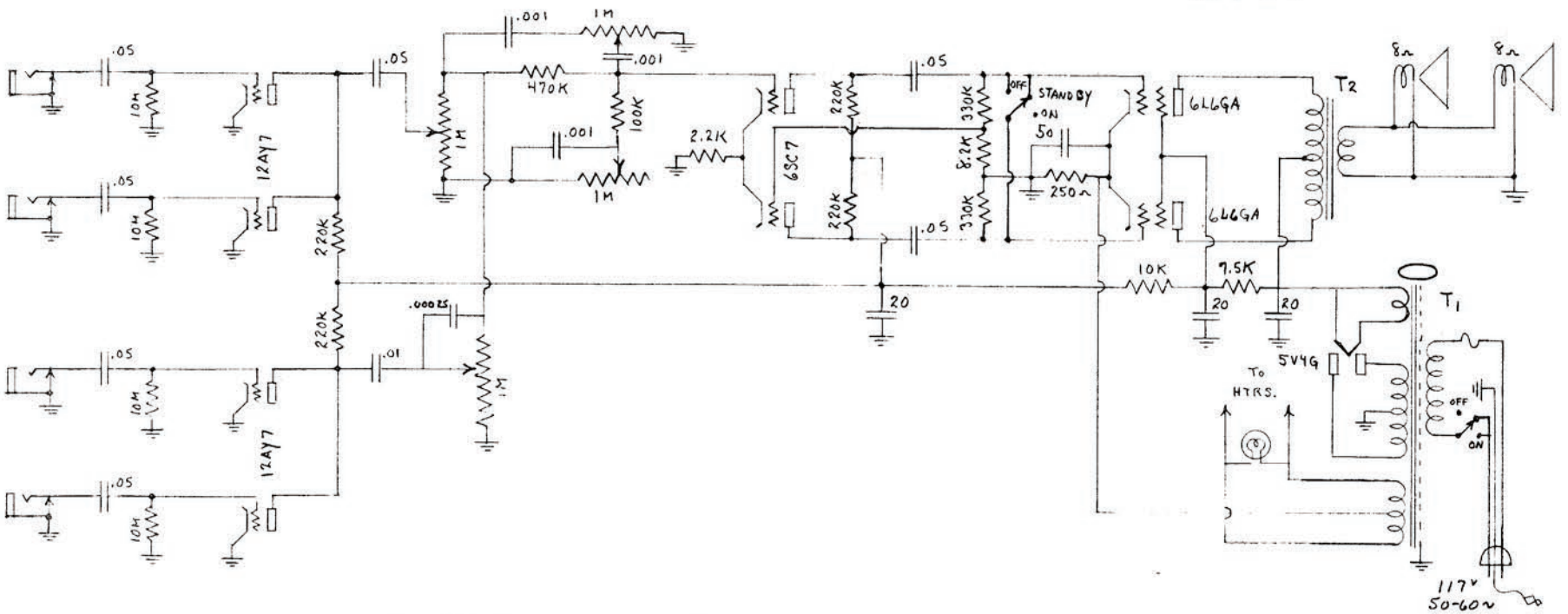

Voltages to Chassis using 20,000 Ω/V meter.

Tube	Use	Plate	Screen	Cathode	Plate	Screen	Cathode
5V4G	Rectifier	300VAC	—	360	300VAC	—	360
6L6GA	OUTPUT	355	305	25			
6L6GA	OUTPUT	355	305	25			
6SC7	INVERTER	160	—	1.85	160	—	1.85
12AY7	INST.	40	—	0.0	40	—	0.0
12AY7	MIC	40	—	0.0	40	—	0.0

Normal voltages may vary 20% with normal tubes in resistance coupled stages

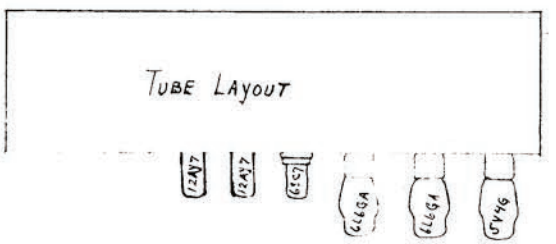

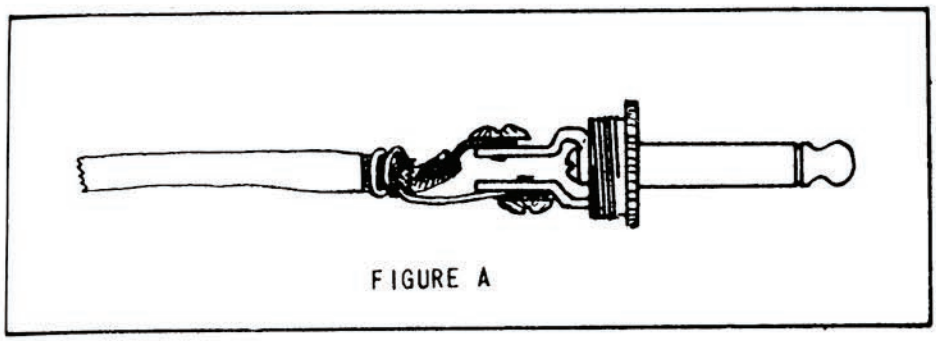

FIGURE A

OPERATION OF INSTRUMENT

When one, or two, instruments are plugged into the jacks marked "Instruments," three stages of amplification are used. The total gain of both being set with the control marked "Instruments."

The jacks marked INSTRUMENTS or MICROPHONE may also be used with any of the GIBSON electrical instruments. When used this way a careful setting of the volume control marked MICROPHONE must be made to avoid overload and consequent distortion. This adjustment can be easily made by turning the volume control on the guitar or other instrument all the way on and setting the MICROPHONE control at the point where no distortion occurs when the strings are struck with maximum force. By utilizing the MICROPHONE jacks in this way two more instruments can be plugged in, making a total of four electrical instruments which may be used and blended.

The tone control circuits for this amplifier have been designed to give the player an extremely wide range of tonal coloring.

BASS AND TREBLE TONE CONTROLS

A separate control has been provided for control of the bass or low frequencies and for the treble or high frequencies. The use of these two controls allows the player to obtain the maximum combinations of tone from a beautiful clear treble to a deep resonant bass. Setting the "BASS" control at maximum and the "TREBLE" at minimum, produces the deepest, fullest bass tone. Setting the "TREBLE" control at maximum and the "BASS" at minimum produces a chime-like tone rich in higher harmonics and will enable the artist to pick harmonics with greater ease. When both "BASS" and "TREBLE" controls are set at minimum the middle register predominates.

OPERATION OF THE MICROPHONE

Because of the high power output, high gain and high fidelity characteristics of the GIBSON GA-*55* Amplifier it makes an exceptionally fine public address system when used with either the crystal, dynamic or velocity types of microphones.

While the amplifier will operate very well with any of the crystal, medium or high impedance dynamic or velocity (ribbon) microphones, it is recommended that, before investing in a microphone, you consult your GIBSON dealer. Authorized GIBSON dealers can supply you with a microphone which has been selected and matched to the amplifier, thus insuring the most faithful reproduction of voice and music.

When using a microphone it is important that the GIBSON 75A or similar shielded plug be attached to the cord. The ordinary phone plug with bakelite or other non-shielded cover is not suitable because the leads from the microphone must be completely shielded. Otherwise, objectionable hum will result. Figure A

(over)

OPERATION OF THE MICROPHONE (Cont'd)

illustrates the proper way to connect the plug to the microphone cable. To use the microphone, insert the plug in the MICROPHONE jack and advance the MICROPHONE volume control until a feedback squeal or howl is produced in the loudspeaker. Reduce the volume control to just below the feedback point. This setting will vary considerably depending upon the size of the room, its acoustical properties and the distance between the microphone and loudspeaker. Feedback is the limiting factor in all public address installations and is caused when the level of sound from the loudspeakers is sufficient to actuate the microphone. The general rule when setting up the equipment is to place the loudspeaker as far from the microphone as possible.

The volume controls INSTRUMENTS and MICROPHONE, being completely independent of each other, allow the inputs from the various sources to be "mixed" or blended. Because of this flexibility many unusual effects can be easily worked out.

If the MICROPHONE jacks are not in use turn the MICROPHONE volume control all the way off.

GENERAL

Amplifiers are carefully packed to prevent damage in shipment. However, upon receipt of the amplifier, look it over carefully to make sure there has been no breakage of tubes or parts. If you find that damage has occurred during shipment, we suggest the Transportation Company be called immediately, and a claim placed.

CAUTION

Damage to the amplifier will result if it is connected to an improper power source. This amplifier is designed to be operated on 105-125 volt, 50-60 cycle alternating current only. Make sure the voltage from the power lines is not over 125, and that the frequency of the current is either 50 or 60 cycles. When ready to turn on power, plug the power cord into the electric outlet and turn on the switch. Wait approximately one minute for the tubes to heat, and the amplifier is ready for use.

TUBES

Be sure tubes are in their proper positions before placing the amplifier in operation. All tubes have been tested and proved satisfactory before shipment.

GROUND CLIP

The AC line cord is equipped with an external Ground Clip that can be attached to any grounded object such as a water pipe, steam radiator, or to a grounded circuit such as used in recording and broadcasting studios. This reduces extraneous noises and hum -- a feature very essential for top notch performance.

SERVICE

If the amplifier is in need of servicing, we suggest it be taken to a reliable radio man. The electrical diagram attached should be shown the repairman to assist him in servicing the amplifier.

* * * *

The fuse in the GA-55 Amplifier is a type AG of three ampere rating. DO NOT USE FUSES OF HIGHER RATING.

Gibson

RANGER

MODEL GA-55 RVT AMPLIFIER

"WITH SPECTRUM CONTROL"

INSTRUCTIONS

PRODUCT OF

Gibson Electronics

KALAMAZOO, MICHIGAN

IMPORTANT — READ CAREFULLY BEFORE USE

CAUTION

The Reverb Unit has been carefully constructed. It is, however, a delicate electronic device. Treat it with the same care and respect given a TV set.

Avoid dropping, sudden jolts, or rough handling and it will give excellent service. This beautifully musical Reverberation effect is not to be confused with the repeating signal produced by the mechanical tape recorder style of echo units.

UNPACKING

Amplifiers are carefully packed to prevent damage in shipment. However, upon receipt of the amplifier, examine carefully to determine if there has been breakage of tubes or parts. If damage has occurred during shipment, call the Transportation Company immediately, and place a claim.

TUBES

Make certain all tubes are seated firmly into their respective sockets. Each tube is labeled for proper replacement should any tube be out of its socket. Be especially carefully when inserting tubes to see that the pins on the tube are correctly aligned with the holes in the socket before pushing into place. Do not twist tube — push tube straight into socket. It is advisable to check tubes from time to time depending on amount of use and excellence of performance. *Be sure tubes are always returned to proper sockets and seated firmly.*

CAUTION

Damage to the amplifier will result if it is connected to an improper power source. This amplifier is designed to be operated on 105-125 volt, 50-60 cycle alternating current only. The voltage from the power lines should not exceed 125, and the frequency of the current should be either 50 or 60 cycles. When ready to use amplifier, insert the plug on the power cord into the electric outlet and move switch to "on." After approximately one minute for the tubes to heat, the amplifier is ready for use.

A. C. POWER-POLARITY SWITCH

A convenient switch has been provided for performing a total of three functions, turning the amplifier on and off, putting the amplifier in "Standby" and selecting the proper polarity of the power source which reduces the A.C. hum and other extraneous noises to a minimum. In the "Standby" position the amplifier is kept "warmed up" and ready to play at the instant the switch is advanced to the "On" positions. Two "On" positions have been provided. The hum and hiss level on one of the "On" positions will be noticeably lower — this is the correct "Polarity" for using the amplifier.

As an added convenience to the artist this amplifier is equipped with a "Standby pilot light" as well as the "Regular pilot light". When the "Amber" light is on, the amplifier is in "Standby"; when the "Red" light is on the amplifier is "On" and ready to play.

FUSE

The fuse used in this Amplifier is a type 3AG of 2 ampere Slo-Blo rating. DO NOT USE A FUSE OF HIGHER RATING.

SERVICE

If the amplifier is in need of servicing, it should be taken to a reliable radio man. The electrical diagram in this folder should be shown the repairman to assist him in servicing the amplifier.

REVERBERATION — EFFECTIVE IN CHANNEL 2 ONLY

The Reverberation Unit must always be placed on a solid non-vibrating surface or footing when in operation.

Any sudden shock, jolt, or wiggle, when in use, will cause undesirable noise. The resultant clatter of an inadvertant shake or bump is annoying but not necessarily harmful. This delicate sensitivity to shock and vibration is a normal characteristic of the device.

No problem will be encountered while the unit is connected if supporting surface is solid and unit is not moved about. To avoid the unwanted noise, turn the reverberation unit off by pressing the foot switch.

TREMOLO — EFFECTIVE IN CHANNEL 2 ONLY

The Tremolo effect adds another dimension to the Reverberation effect. It can be used either with or without reverberation at the players discretion. The Tremolo is turned on or off by the use of the foot switch. The Tremolo Frequency Range has been carefully set to cover a wide range of Tremolo effects. The Depth of the Tremolo is also variable being controlled by the Depth control.

OPERATION OF MICROPHONE

The high gain and high fidelity characteristics of this Amplifier, permit the use of most of the popular high impedance microphones for public address work. The microphone should be plugged into the Number One Jack of Channel 1.

SPECTRUM CONTROLS

The wide range of tonal extremes required by different artists can all be accommodated with Gibson Spectrum Control. For maximum loudness with a given power, the "treble" control should be Maximum, the "mid range" minimum, and the bass near 5. With this adjustment the tone controls on the guitar will have their maximum effectiveness.

"Jazz" sound to the artist taste can be had by reducing the "treble", adding some "mid range", and adjusting the "bass" to the artist requirement.

Spectrum Controls plus the tone controls on the artist's instrument offer an endless variety of tonal color.

PRESENCE SWITCH

Presence switch in upper position will add a Chime or Bell like tone to the upper harmonics. In the lower position, the treble tones will have a mello characteristic.

GA-55RVT

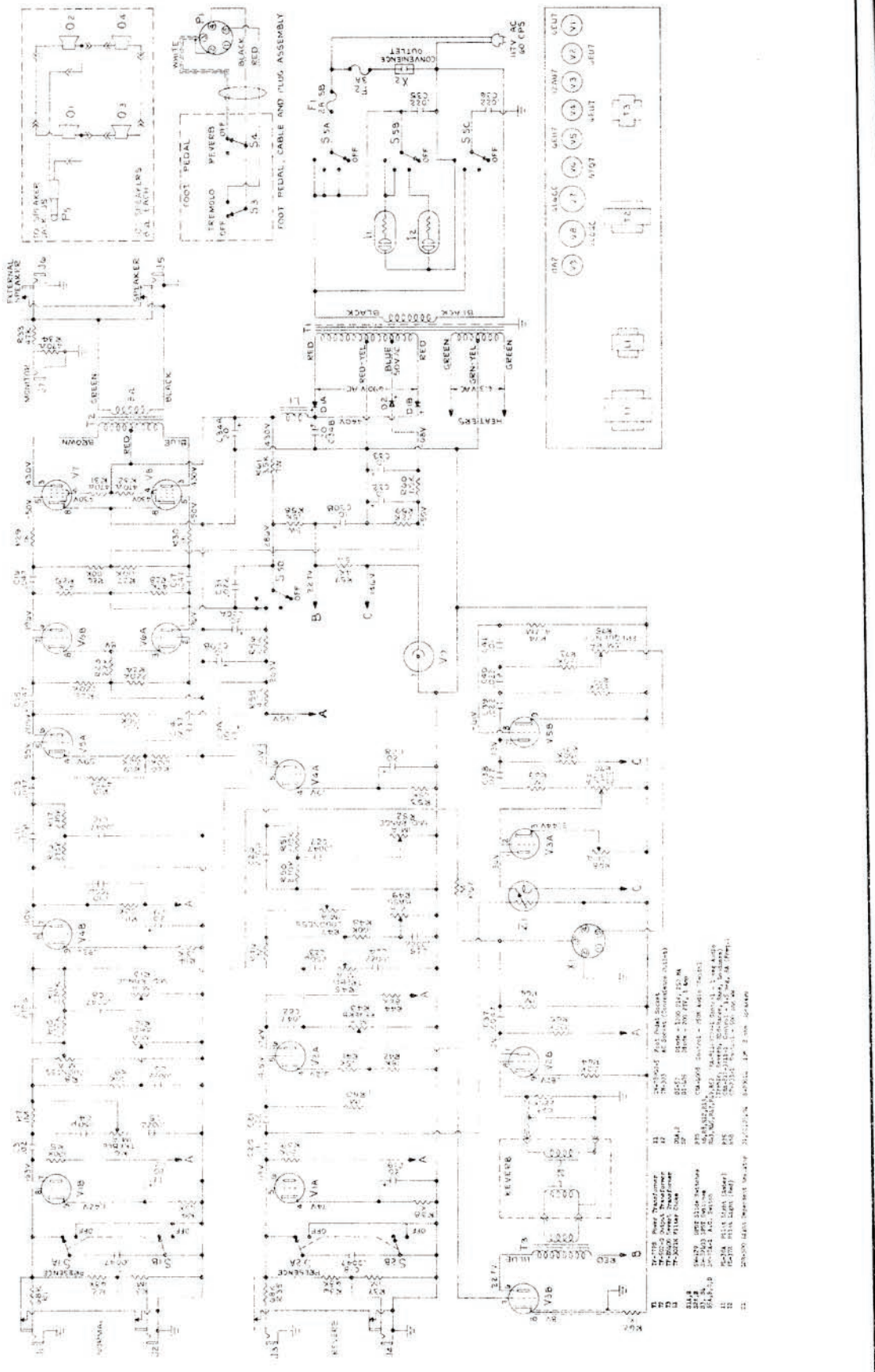

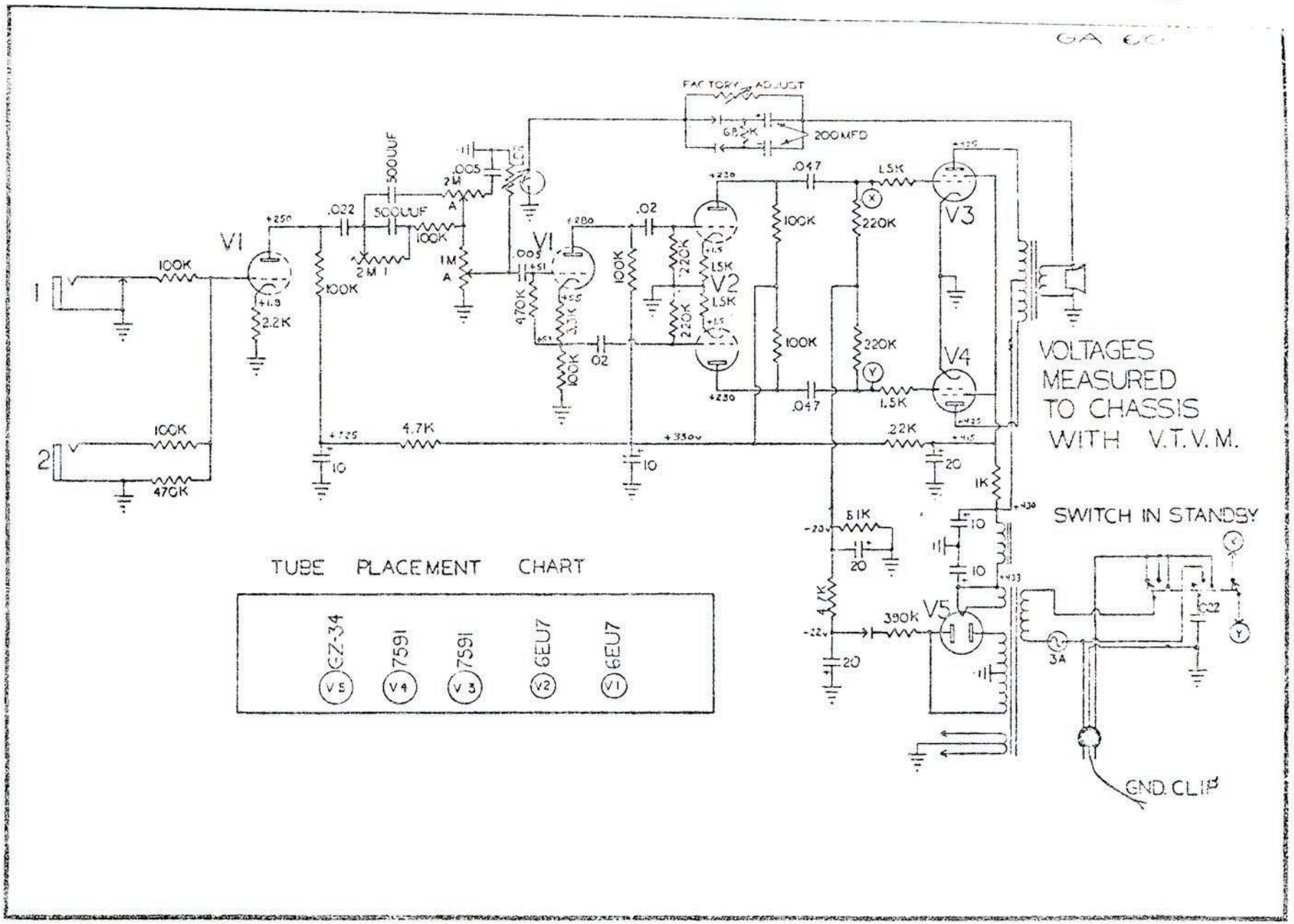
GA 60
FACTORY ADJUST
200MFD
V1
V2
V3
V4
V5
100K
470K
2.2K
.022
500UUF
2M
1M
.005
.02
.047
1.5K
220K
4.7K
.22K
1K
51K
390K
3A
VOLTAGES MEASURED TO CHASSIS WITH V.T.V.M.
SWITCH IN STANDBY
GND. CLIP
TUBE PLACEMENT CHART
GZ-34
7591
7591
6EU7
6EU7
V5
V4
V3
V2
V1

GIBSON

MODEL COUNTRY-WESTERN
GA-70 AMPLIFIER

INSTRUCTIONS

GIBSON INC., KALAMAZOO, MICHIGAN

GA-70

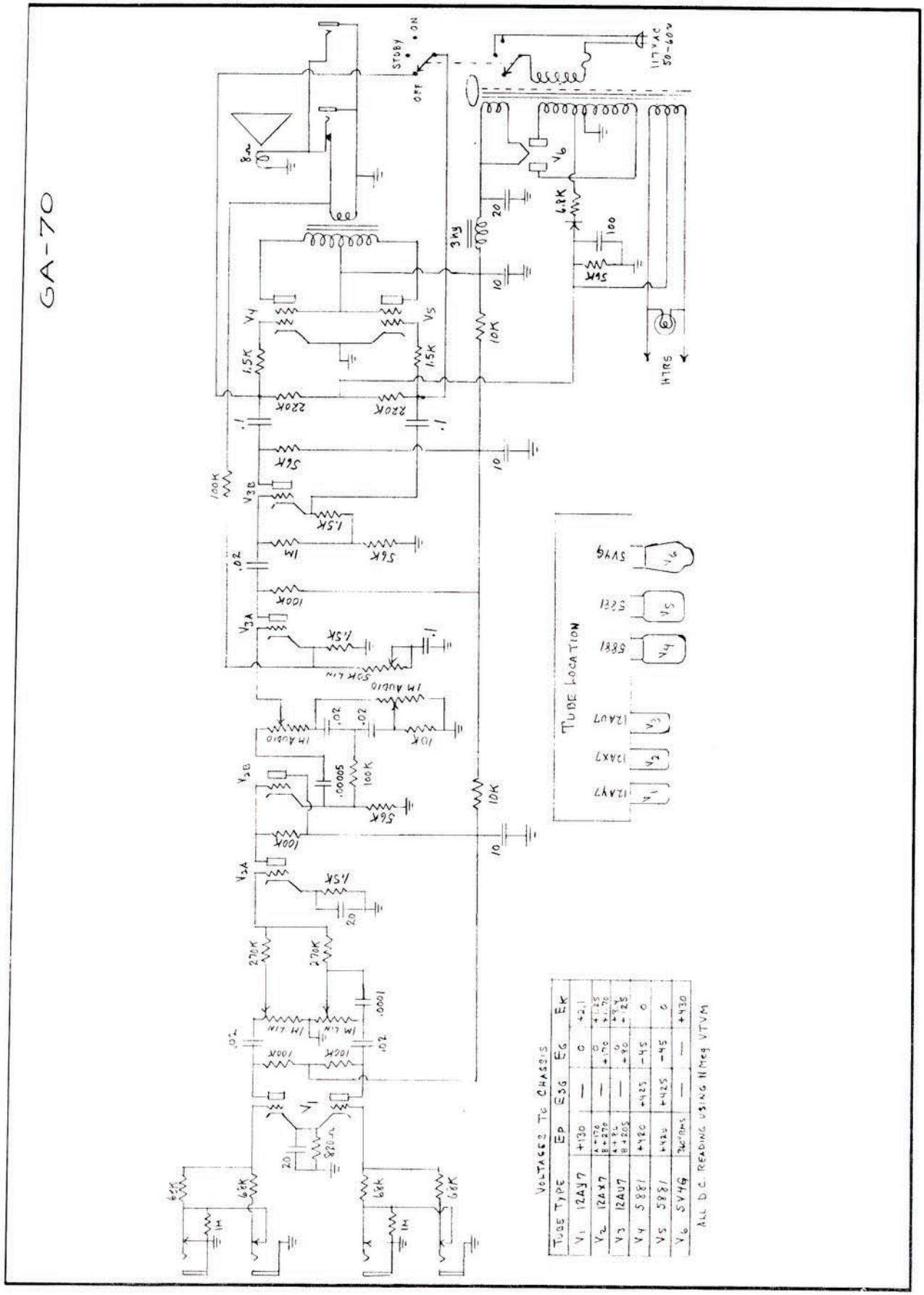

VOLTAGES TO CHASSIS

TUBE	TYPE	Ep	Esg	Eg	Ek
V1	12AV7	+130	—	0	+2.1
V2	12AX7	A +170 B +270	—	0 +1.70	+1.25 +1.70
V3	12AV7	A +90 B +265	—	0 +90	+1.25 +1.25
V4	5881	+420	+425	-45	0
V5	5881	+420	+425	-45	0
V6	5V4G	700 VAC	—	—	+430

ALL D.C. READING USING 11 Meg VTVM

GIBSON AMPLIFIER — MODEL COUNTRY-WESTERN (GA-70)

PURPOSE

Engineered for the Professional to meet today's needs in tonal quality, performance, and power. Unusually clear, bell-like treble with amazing reserve volume and sustaining qualities. Instantaneous response with a tone that bites through, yet is pleasing to the ear and free of distortion.

POWER OUTPUT

The COUNTRY-WESTERN Model is a High Fidelity Amplifier capable of a normal output of twenty-five watts and peak output in excess of 35 watts.

FOUR INPUT CIRCUITS

Four High Gain input jacks for various combinations of electronic instruments and microphone adjustable to a wide variety of volume and tone coloring.

BASS AND TREBLE TONE CONTROLS

A separate control has been provided for control of the bass or low frequencies and for the treble or high frequencies. The use of these two controls allows the player to obtain the maximum combinations of tone from a beautiful clear treble to a deep resonant bass. Setting the "BASS" control at maximum and the "TREBLE" at minimum, produces the deepest, fullest bass tone. Setting the "TREBLE" control at maximum and the "BASS" at minimum produces a chime-like tone rich in higher harmonics and will enable the artist to pick harmonics with greater ease. When both "BASS" and "TREBLE" controls are set at minimum the middle register predominates.

15" HEAVY DUTY SPEAKER

The 15" Heavy Duty Speaker used in the COUNTRY-WESTERN Amplifier has been designed especially for instrument reproduction. The sturdy felted cone and the heavy duty new type Alnico V magnet assures a stable frequency response over a much longer period of time than was possible with older types of cones and magnets.

EXTENSION SPEAKER JACKS

Equipped with switching jacks for extension speakers. The extension speaker can be plugged into one jack, and both the regular speaker and the extension speaker will disperse the sound; or the extension speaker can be plugged into the other jack and only the extension speaker will disperse the sound.

STANDBY SWITCH

The 110 Volt power switch has three positions: — OFF, STANDBY, and ON. In the Standby position, the tubes are lighted and heating, but the speaker is disconnected, eliminating any possible accidental sounds. Movement of the switch from Standby to On gives instant response without waiting to warm up.

OPERATION OF THE MICROPHONE

Because of the high power output, high gain and high fidelity characteristics of the GIBSON COUNTRY-WESTERN Amplifier it makes an exceptionally fine public address system when used with either the crystal, dynamic or velocity types of microphones.

While the Amplifier will operate very well with any of the crystal, medium or high impedance dynamic or velocity (ribbon) microphones, it is recommended that a GIBSON Dealer be consulted before investing in a microphone. Authorized Gibson Dealers can supply a microphone which has been selected and matched to the amplifier, thus insuring the most faithful reproduction of voice and music.

When using a microphone it is important that a shielded plug be attached to the cord. The ordinary phone plug with bakelite or other non-shielded cover is not suitable because the leads from the microphone must be completely shielded. Otherwise objectional hum will result. Figure B illustrates the proper way to connect the plug to the microphone cable. To use the microphone, insert the plug in the MICROPHONE socket and advance the Microphone Volume Control until a feedback squeal or howl is produced by the loudspeakers. Reduce the Volume Control to just below the feedback point. This setting will vary considerable depending upon the size of the room, its acoustical properties and the distance between the microphone and the loudspeaker. Feedback is the limiting factor in all public address installations and is caused when the level of sound from the loudspeakers is sufficient to actuate the microphone. The general rule when setting up the equipment is to place the loudspeaker as far from the microphone as possible.



FIGURE B

GENERAL

Amplifiers are carefully packed to prevent damage in shipment. However, upon receipt of the Amplifier, examine carefully to determine if there has been breakage of tubes or parts. If damage has occured during shipment, the Transportation Company should be notified immediately, and a claim placed.

CAUTION

Damage to the Amplifier will resut if it is connected to an improper power source. This amplifier is designed to be operated on 105 - 125 volt, 50 - 60 cycle alternating current ONLY. Check the voltage from the power lines to determine that it is not over 125 volts, and the frequency of the current is either 50 or 60 cycles.

When ready to use power, plug the power cord into the electric outlet and move the switch to the ON position. Approximately one minute is required for the tubes to heat before the Amplifier is ready to use.

TUBES

Check tubes for proper positioning before placing the Amplifier in operation. All tubes have been tested and proved satisfactory before shipment.

GROUND CLIP

The AC Line Cord is equipped with an external Ground Clip that can be attached to any grounded object such as a water pipe, steam radiator, or to a grounded circuit such as used in recording and broadcasting studios. This reduces extraneous noises and hum — a feature very essential for top notch performance.

SERVICE

If the Amplifier is in need of servicing, consult a reliable radio man. The electrical diagram herein should be shown to the repairman to assist him in servicing the Amplifier.

FUSE

The fuse in the COUNTRY-WESTERN Amplifier is a type AG Slo-Blo of three ampere rating. DO NOT USE A FUSE OF HIGHER RATING.

Gibson

RECORDING
MODEL GA-75 AMPLIFIER

INSTRUCTIONS

PRODUCT OF Gibson Electronics
KALAMAZOO, MICHIGAN

IMPORTANT — READ CAREFULLY BEFORE USE

UNPACKING

Amplifiers are carefully packed to prevent damage in shipment. However, upon receipt of the amplifier, examine carefully to determine if there has been breakage of tubes or parts. If damage has occurred during shipment, call the Transportation Company immediately, and place a claim.

TUBES

Make certain all tubes are seated firmly into their respective sockets. Each tube is labeled for proper replacement should any tube be out of its socket. Be especially careful when inserting tubes to see that the pins on the tube are correctly aligned with the holes in the socket before pushing into place. Do not twist tube — push tube straight into socket. It is advisable to check tubes from time to time depending on amount of use and excellence of performance. *Be sure tubes are always returned to proper sockets and seated firmly.*

CAUTION

Damage to the amplifier will result if it is connected to an improper power source. This amplifier is designed to be operated on 105-125 volt, 50-60 cycle alternating current only. The voltage from the power lines should not exceed 125, and the frequency of the current should be either 50 or 60 cycles. When ready to use amplifier, insert the plug on the power cord into the electric outlet and move switch to "on." After approximately one minute for the tubes to heat, the amplifier is ready for use.

A.C. POWER-POLARITY SWITCH

A convenient switch has been provided for performing a total of three functions, turning the amplifier on and off, putting the amplifier in "Standby" and selecting the proper polarity of the power source which reduces the A.C. hum and other extraneous noises to a minimum. In the "Standby" position the amplifier is kept "warmed up" and ready to play at the instant the switch is advanced to the "On" positions. Two "On" positions have been provided. The hum and hiss level on one of the "On" positions will be noticeably lower — this is the correct "Polarity" for using the amplifier.

As an added convenience to the artist this amplifier is equipped with a "Standby pilot light" as well as the "Regular pilot light". When the "Green" light is on the amplifier is in "Standby"; when the "Red" light is on the amplifier is "On" and ready to play.

FUSE

The fuse used in this Amplifier is a type 3 AG Slo-Blo of two amperes rating. DO NOT USE FUSES OF HIGHER RATING.

SERVICE

If the amplifier is in need of servicing, it should be taken to a reliable radio man. The electrical diagram in this folder should be shown the repairman to assist him in servicing the amplifier.

OPERATION OF INSTRUMENTS

This amplifier is equipped with a total of four input jacks, two in each channel. In normal operation the instrument would be plugged into channel two. The input jacks of channel two are numbered 1. and 2. and when plugging in the instrument cords, they should be inserted in their respective jacks — that is, first instrument into the No. 1 jack and the second instrument into the No. 2 jack.

BASS AND TREBLE TONE CONTROLS

A separate control has been provided for control of the bass or low frequencies and for the treble or high frequencies. The use of these two controls allows the player to obtain the maximum combinations of tone from a beautiful clear treble to a deep resonant bass. Setting the "BASS" control at maximum and the "TREBLE" at minimum, produces the deepest, fullest bass tone. Setting the "TREBLE" control at maximum and the "BASS" at minimum produces a chime-like tone rich in higher harmonics and will enable the artist to pick harmonics with greater ease. When both "BASS" and "TREBLE" controls are set at minimum the middle register predominates.

MONITOR JACK

This convenient jack is provided for extending the usefullness of the amplifier. Some of it's many uses include: — Use in tape recording; Use in driving additional amplifiers, feeding into Public Address systems; Use with Hi-Fi amplifiers. For best results the Monitor Jack should be fed into a High-impedance circuit.

OPERATION OF MICROPHONE

The high gain and high fidelity characteristics of this Amplifier, permit the use of most of the popular high impedance microphones for public address work. The microphone should be plugged into the Number One Jack of Channel 1.

When using a microphone it is important that a number 280 or similar shielded plug be attached to the cord. The ordinary phone plug with bakelite or other non-shielded cover is not suitable because the leads from the microphone must be completely shielded. Otherwise, objectionable hum will result. Figure A illustrates the proper way to connect the plug to the microphone cable. To use the microphone, insert the plug in the "Microphone" jack and advance the Microphone volume control until a feedback squeal or howl is produced on the loudspeaker. Reduce the volume control to just below the feedback point. This setting will vary considerably, depending upon the size of the room, its acoustical properties and the distance between the microphone and loudspeaker. Feedback is the limiting factor in all public address installations and is caused when the level of sound from the loudspeakers is sufficient to actuate the microphone. The general rule when setting up the equipment is to place the loudspeaker as far from the microphone as possible.



Figure A

GA-75

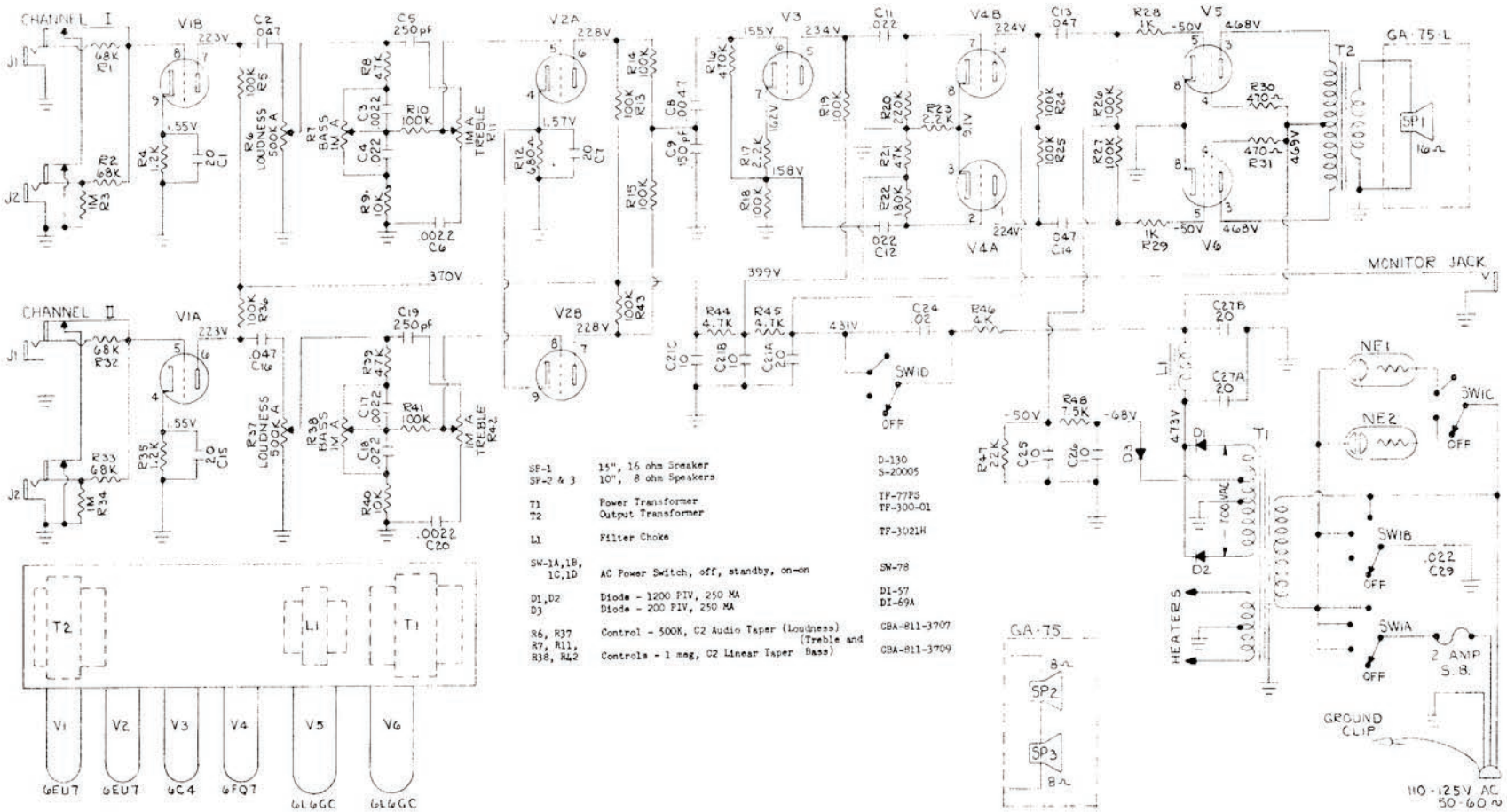

SP-1	15", 16 ohm Speaker	D-130
SP-2 & 3	10", 8 ohm Speakers	S-20005
T1	Power Transformer	TF-77PS
T2	Output Transformer	TF-300-01
L1	Filter Choke	TF-3021H
SW-1A,1B, 1C,1D	AC Power Switch, off, standby, on-on	SW-78
D1,D2	Diode - 1200 PIV, 250 MA	DI-57
D3	Diode - 200 PIV, 250 MA	DI-69A
R6, R37	Control - 500K, C2 Audio Taper (Loudness)	CBA-811-3707
R7, R11, R38, R42	Controls - 1 meg, C2 Linear Taper (Treble and Bass)	CBA-811-3709

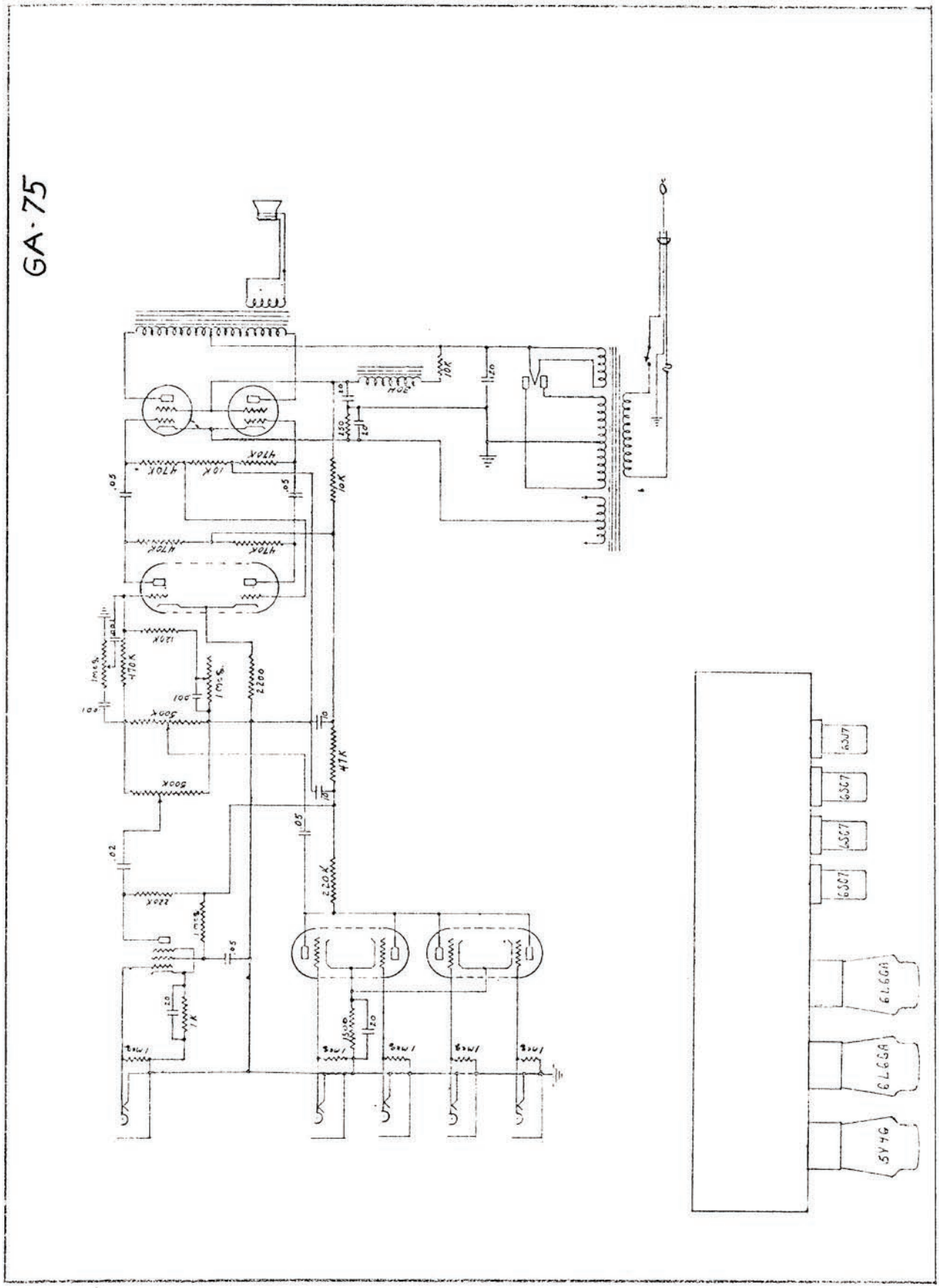
GA·75
6SJ7
6SC7
6SC7
6SC7
6L6GA
6L6GA
5Y4G

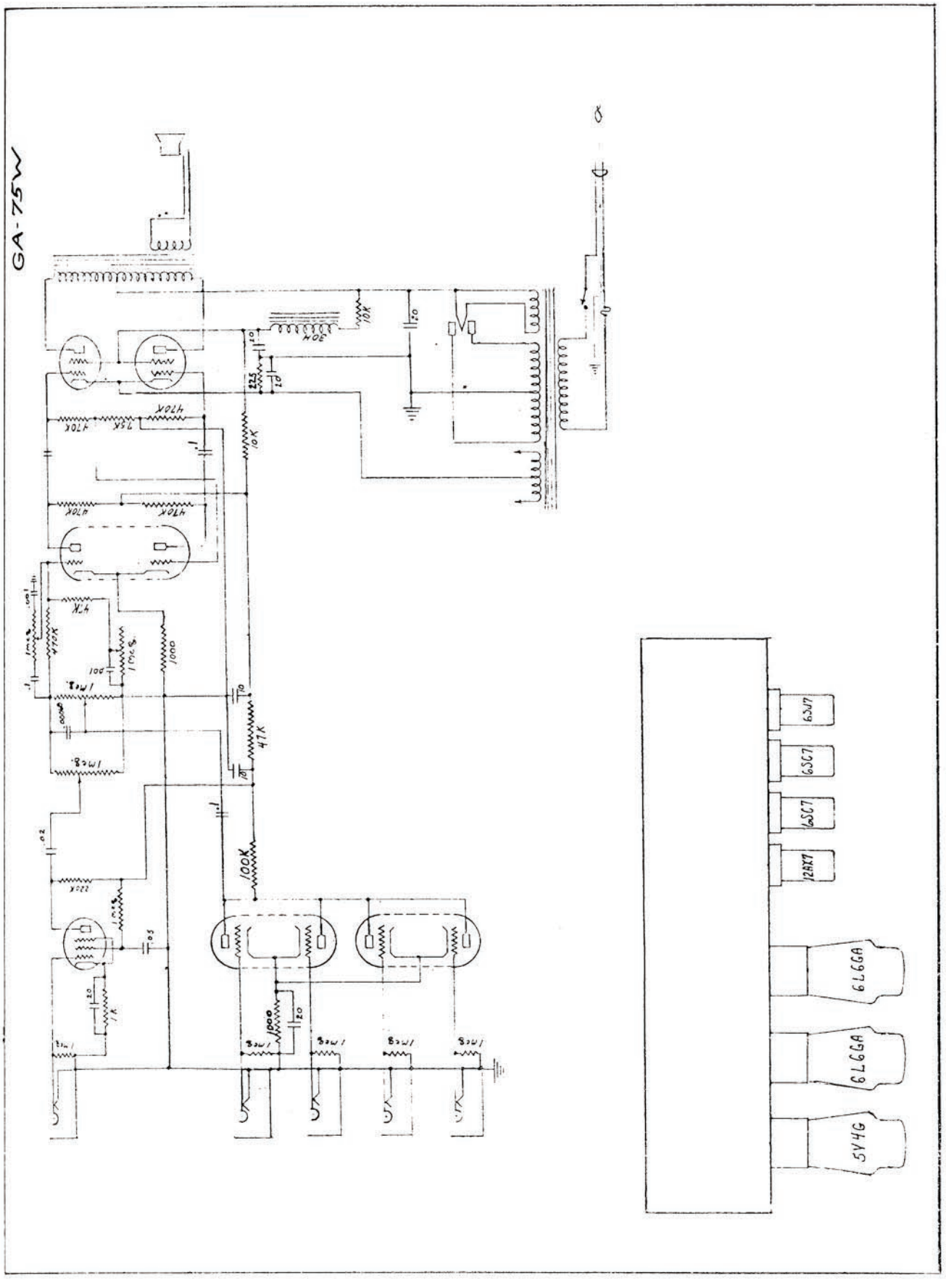
GA-75W
6SJ7
6SC7
6SC7
12AX7
6L6GA
6L6GA
5V4G

GIBSON

MODEL GA-77 AMPLIFIER

INSTRUCTIONS

GIBSON INC., KALAMAZOO, MICHIGAN

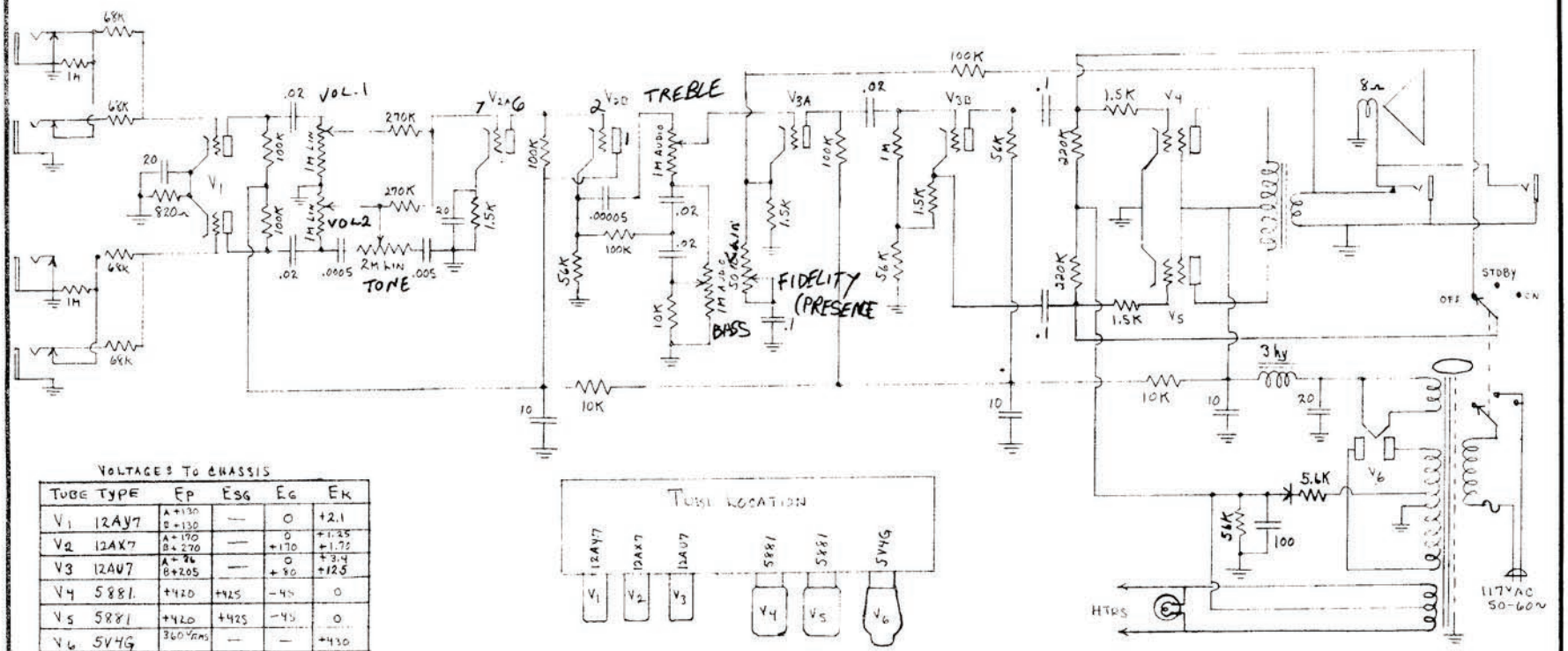

VOLTAGES TO CHASSIS

TUBE	TYPE	EP	ESG	EG	EK
V1	12AY7	A +130 B +130	—	0	+2.1
V2	12AX7	A +170 B +270	—	0 +170	+1.35 +1.75
V3	12AU7	A +96 B +205	—	0 +80	+3.4 +125
V4	5881	+420	+425	−45	0
V5	5881	+420	+425	−45	0
V6	5V4G	360 VRMS	—	—	+430

ALL DC READING WITH 11MEG VTVM

GA-77 Amplifier
1953/54
25w

GIBSON AMPLIFIER — MODEL GA-77

PURPOSE

Engineered for the Professional to meet today's needs in tonal quality, performance, and power. Unusually clear, bell-like treble with amazing reserve volume and sustaining qualities. Instantaneous response with a tone that bites through, yet is pleasing to the ear and free of distortion.

POWER OUTPUT

The GA-77 Model is a High Fidelity Amplifier capable of a normal output of twenty-five watts and peak output in excess of 35 watts.

FOUR INPUT CIRCUITS

Four High Gain input jacks for various combinations of electronic instruments and microphone adjustable to a wide variety of volume and tone coloring.

BASS AND TREBLE TONE CONTROLS

A separate control has been provided for control of the bass or low frequencies and for the treble or high frequencies. The use of these two controls allows the player to obtain the maximum combinations of tone from a beautiful clear treble to a deep resonant bass. Setting the "BASS" control at maximum and the "TREBLE" at minimum, produces the deepest, fullest bass tone. Setting the "TREBLE" control at maximum and the "BASS" at minimum produces a chime-like tone rich in higher harmonics and will enable the artist to pick harmonics with greater ease. When both "BASS" and "TREBLE" controls are set at minimum the middle register predominates.

15" HEAVY DUTY SPEAKER

The 15" Heavy Duty Speaker used in the GA-77 Amplifier has been designed especially for instrument reproduction. The sturdy felted cone and the heavy duty new type Alnico V magnet assures a stable frequency response over a much longer period of time than was possible with older types of cones and magnets.

EXTENSION SPEAKER JACKS

Equipped with switching jacks for extension speakers. The extension speaker can be plugged into one jack, and both the regular speaker and the extension speaker will disperse the sound; or the extension speaker can be plugged into the other jack and only the extension speaker will disperse the sound.

STANDBY SWITCH

The 110 Volt power switch has three positions: — OFF, STANDBY, and ON. In the Standby position, the tubes are lighted and heating, but the speaker is disconnected, eliminating any possible accidental sounds. Movement of the switch from Standby to On gives instant response without waiting to warm up.

OPERATION OF THE MICROPHONE

Because of the high power output, high gain and high fidelity characteristics of the GIBSON GA-77 Amplifier it makes an exceptionally fine public address system when used with either the crystal, dynamic or velocity types of microphones.

While the Amplifier will operate very well with any of the crystal, medium or high impedance dynamic or velocity (ribbon) microphones, it is recommended that a GIBSON Dealer be consulted before investing in a microphone. Authorized Gibson Dealers can supply a microphone which has been selected and matched to the amplifier, thus insuring the most faithful reproduction of voice and music.

When using a microphone it is important that a shielded plug be attached to the cord. The ordinary phone plug with bakelite or other non-shielded cover is not suitable because the leads from the microphone must be completely shielded. Otherwise objectional hum will result. Figure B illustrates the proper way to connect the plug to the microphone cable. To use the microphone, insert the plug in the MICROPHONE socket and advance the Microphone Volume Control until a feedback squeal or howl is produced by the loudspeakers. Reduce the Volume Control to just below the feedback point. This setting will vary considerable depending upon the size of the room, its acoustical properties and the distance between the microphone and the loudspeaker. Feedback is the limiting factor in all public address installations and is caused when the level of sound from the loudspeakers is sufficient to actuate the microphone. The general rule when setting up the equipment is to place the loudspeaker as far from the microphone as possible.



FIGURE B

GENERAL

Amplifiers are carefully packed to prevent damage in shipment. However, upon receipt of the Amplifier, examine carefully to determine if there has been breakage of tubes or parts. If damage has occured during shipment, the Transportation Company should be notified immediately, and a claim placed.

CAUTION

Damage to the Amplifier will resut if it is connected to an improper power source. This amplifier is designed to be operated on 105 - 125 volt, 50 - 60 cycle alternating current ONLY. Check the voltage from the power lines to determine that it is not over 125 volts, and the frequency of the current is either 50 or 60 cycles.

When ready to use power, plug the power cord into the electric outlet and move the switch to the ON position. Approximately one minute is required for the tubes to heat before the Amplifier is ready to use.

TUBES

Check tubes for proper positioning before placing the Amplifier in operation. All tubes have been tested and proved satisfactory before shipment.

GROUND CLIP

The AC Line Cord is equipped with an external Ground Clip that can be attached to any grounded object such as a water pipe, steam radiator, or to a grounded circuit such as used in recording and broadcasting studios. This reduces extraneous noises and hum — a feature very essential for top notch performance.

SERVICE

If the Amplifier is in need of servicing, consult a reliable radio man. The electrical diagram herein should be shown to the repairman to assist him in servicing the Amplifier.

FUSE

The fuse in the GA-77 Amplifier is a type AG Slo-Blo of three ampere rating. DO NOT USE A FUSE OF HIGHER RATING.

Gibson

VANGUARD

MODEL GA-77RET AMPLIFIER

"WITH SPECTRUM CONTROL"

INSTRUCTIONS

PRODUCT OF

Gibson Electronics

KALAMAZOO, MICHIGAN

IMPORTANT — READ CAREFULLY BEFORE USE

CAUTION

The Reverb Unit has been carefully constructed. It is, however, a delicate electronic device. Treat it with the same care and respect given a TV set.

Avoid dropping, sudden jolts, or rough handling and it will give excellent service.

UNPACKING

Amplifiers are carefully packed to prevent damage in shipment. However, upon receipt of the amplifier, examine carefully to determine if there has been breakage of tubes or parts. If damage has occurred during shipment, call the Transportation Company immediately, and place a claim.

TUBES

Make certain all tubes are seated firmly into their respective sockets. Each tube is labeled for proper replacement should any tube be out of its socket. Be especially careful when inserting tubes to see that the pins on the tube are correctly aligned with the holes in the socket before pushing into place. Do not twist tube — push tube straight into socket. It is advisable to check tubes from time to time depending on amount of use and excellence of performance. *Be sure tubes are always returned to proper sockets and seated firmly.*

CAUTION

Damage to the amplifier will result if it is connected to an improper power source. This amplifier is designed to be operated on 105-125 volt, 50-60 cycle alternating current only. The voltage from the power lines should not exceed 125, and the frequency of the current should be either 50 or 60 cycles. When ready to use amplifier, insert the plug on the power cord into the electric outlet and move switch to "on." After approximately one minute for the tubes to heat, the amplifier is ready for use.

A.C. POWER-POLARITY SWITCH

A convenient switch has been provided for performing a total of three functions, turning the amplifier on and off, putting the amplifier in "Standby" and selecting the proper polarity of the power source which reduces the A.C. hum and other extraneous noises to a minimum. In the "Standby" position the amplifier is kept "warmed up" and ready to play at the instant the switch is advanced to the "On" positions. Two "On" positions have been provided. The hum and hiss level on one of the "On" positions will be noticeably lower — this is the correct "Polarity" for using the amplifier.

In locations of extremely high noise levels, clipping the "Ground Clip" to a grounded object will greatly reduce objectionable noise and hum.

As an added convenience to the artist this amplifier is equipped with a "Standby pilot light" as well as the "Regular pilot light". When the "Amber" light is on, the amplifier is in "Standby"; when the "Red" light is on,the amplifier is "On" and ready to play.

FUSE

The fuse used in this Amplifier is a type 3 AG Slo-Blo of two amperes rating. DO NOT USE FUSES OF HIGHER RATING.

SERVICE

If the amplifier is in need of servicing, it should be taken to a reliable radio man. The electrical diagram in this folder should be shown the repairman to assist him in servicing the amplifier.

REVERBERATION-ECHO — EFFECTIVE IN CHANNEL 2 ONLY

This unit records music with an electronic pen. The record is made on a film of oil which also serves to lubricate the revolving disc which is the platter for the film. The film is constantly replaced and can never wear out like a magnetic tape. Following the electronic pen are two sensors which reproduce the pattern of electrons for the amplifier. The effect is a multiple choice of echo and reverberant sound with a quality never before achieved.

The control marked "Loudness" controls the amplification separately from the reverb-echo. It is recommended that for average playing some direct sound always be used. This will enhance the effect of the reverb-echo.

"Reverb-Echo" control varies the amount of reverb-echo. A mixture of direct and reverb to suit your taste can be achieved by the proper settings of the two controls "Loudness" and "Reverb-Echo".

The mode control has three positions. Position #1 simulates room reverberation with a soft echo. Position #2 provides reverberation with a bold echo with a given repetition rate. Position #3 is similar to position #2 except that the echo rate is quicker. To quickly identify the different sounds possible, mute the strings near the nut or bridge and then listen to the string plucked with the three different positions of the switch.

IMPORTANT NOTE:—This unit should be operated ***only*** in the horizontal position. The exact angle is not critical but do not operate upside down, on end or on its back. The recording medium is on oil. The correct amount is placed in the unit at the factory. The unit is sealed at the factory and if not tampered with no problem will be experienced. ***Do not open the metal container which surrounds the recording element.***

TREMOLO — EFFECTIVE IN CHANNEL 2 ONLY

The Tremolo effect adds another dimension to the Reverberation effect. It can be used either with or without reverberation at the players discretion. The Tremolo is turned on or off by the use of the foot switch. The Tremolo Frequency Range has been carefully set to cover a wide range of Tremolo effects. The Depth of the Tremolo is also variable being controlled by the Depth control.

OPERATION OF MICROPHONE

The high gain and high fidelity characteristics of this Amplifier, permit the use of most of the popular high impedance microphones for public address work. The microphone should be plugged into the Number One Jack of Channel 1.

SPECTRUM CONTROLS

The wide range of tonal extremes required by different artists can all be accommodated with Gibson Spectrum Control. For maximum loudness with a given power, the "treble" control should be Maximum, the "mid range" minimum, and the bass near 5. With this adjustment the tone controls on the guitar will have their maximum effectiveness.

"Jazz" sound to the artist taste can be had by reducing the "treble", adding some "mid range", and adjusting the "bass" to the artist requirement.

Spectrum Controls plus the tone controls on the artist's instrument offer an endless variety of tonal color.

GA-77RET

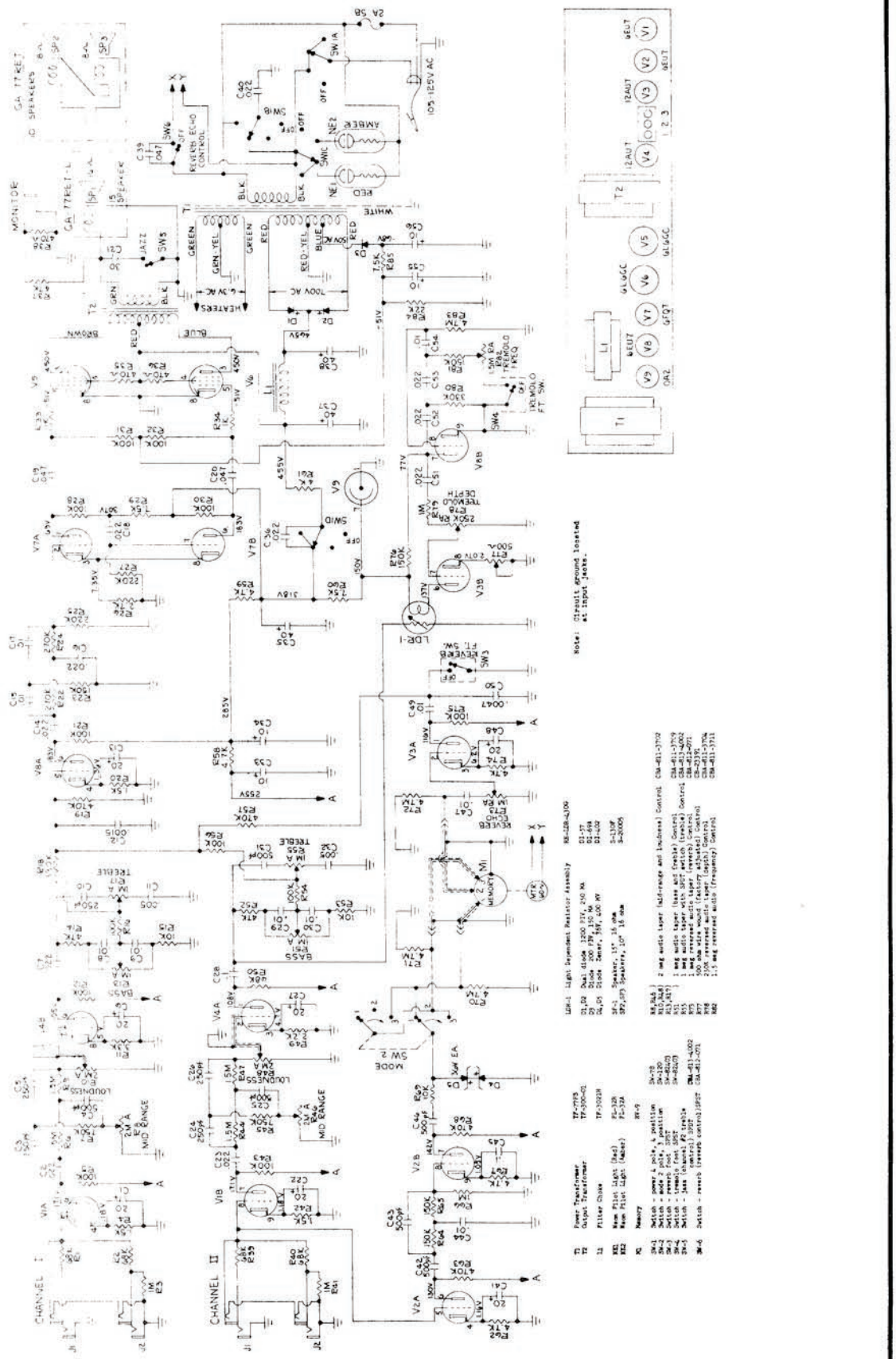

Gibson

VANGUARD

MODEL GA-77RET AMPLIFIER

"WITH SPECTRUM CONTROL"

INSTRUCTIONS

PRODUCT OF

Gibson Electronics

KALAMAZOO, MICHIGAN

IMPORTANT — READ CAREFULLY BEFORE USE

CAUTION

The Reverb Unit has been carefully constructed. It is, however, a delicate electronic device. Treat it with the same care and respect given a TV set.

Avoid dropping, sudden jolts, or rough handling and it will give excellent service.

UNPACKING

Amplifiers are carefully packed to prevent damage in shipment. However, upon receipt of the amplifier, examine carefully to determine if there has been breakage of tubes or parts. If damage has occurred during shipment, call the Transportation Company immediately, and place a claim.

TUBES

Make certain all tubes are seated firmly into their respective sockets. Each tube is labeled for proper replacement should any tube be out of its socket. Be especially careful when inserting tubes to see that the pins on the tube are correctly aligned with the holes in the socket before pushing into place. Do not twist tube — push tube straight into socket. It is advisable to check tubes from time to time depending on amount of use and excellence of performance. *Be sure tubes are always returned to proper sockets and seated firmly.*

CAUTION

Damage to the amplifier will result if it is connected to an improper power source. This amplifier is designed to be operated on 105-125 volt, 50-60 cycle alternating current only. The voltage from the power lines should not exceed 125, and the frequency of the current should be either 50 or 60 cycles. When ready to use amplifier, insert the plug on the power cord into the electric outlet and move switch to "on." After approximately one minute for the tubes to heat, the amplifier is ready for use.

A.C. POWER-POLARITY SWITCH

A convenient switch has been provided for performing a total of three functions, turning the amplifier on and off, putting the amplifier in "Standby" and selecting the proper polarity of the power source which reduces the A.C. hum and other extraneous noises to a minimum. In the "Standby" position the amplifier is kept "warmed up" and ready to play at the instant the switch is advanced to the "On" positions. Two "On" positions have been provided. The hum and hiss level on one of the "On" positions will be noticeably lower — this is the correct "Polarity" for using the amplifier.

In locations of extremely high noise levels, clipping the "Ground Clip" to a grounded object will greatly reduce objectionable noise and hum.

As an added convenience to the artist this amplifier is equipped with a "Standby pilot light" as well as the "Regular pilot light". When the "Amber" light is on, the amplifier is in "Standby"; when the "Red" light is on,the amplifier is "On" and ready to play.

FUSE

The fuse used in this Amplifier is a type 3 AG Slo-Blo of two amperes rating. DO NOT USE FUSES OF HIGHER RATING.

SERVICE

If the amplifier is in need of servicing, it should be taken to a reliable radio man. The electrical diagram in this folder should be shown the repairman to assist him in servicing the amplifier.

REVERBERATION-ECHO — EFFECTIVE IN CHANNEL 2 ONLY

This unit records music with an electronic pen. The record is made on a film of oil which also serves to lubricate the revolving disc which is the platter for the film. The film is constantly replaced and can never wear out like a magnetic tape. Following the electronic pen are two sensors which reproduce the pattern of electrons for the amplifier. The effect is a multiple choice of echo and reverberant sound with a quality never before achieved.

The control marked "Loudness" controls the amplification separately from the reverb-echo. It is recommended that for average playing some direct sound always be used. This will enhance the effect of the reverb-echo.

"Reverb-Echo" control varies the amount of reverb-echo. A mixture of direct and reverb to suit your taste can be achieved by the proper settings of the two controls "Loudness" and "Reverb-Echo".

The mode control has three positions. Position #1 simulates room reverberation with a soft echo. Position #2 provides reverberation with a bold echo with a given repetition rate. Position #3 is similar to position #2 except that the echo rate is quicker. To quickly identify the different sounds possible, mute the strings near the nut or bridge and then listen to the string plucked with the three different positions of the switch.

IMPORTANT NOTE:—This unit should be operated ***only*** in the horizontal position. The exact angle is not critical but do not operate upside down, on end or on its back. The recording medium is on oil. The correct amount is placed in the unit at the factory. The unit is sealed at the factory and if not tampered with no problem will be experienced. ***Do not open the metal container which surrounds the recording element.***

TREMOLO — EFFECTIVE IN CHANNEL 2 ONLY

The Tremolo effect adds another dimension to the Reverberation effect. It can be used either with or without reverberation at the players discretion. The Tremolo is turned on or off by the use of the foot switch. The Tremolo Frequency Range has been carefully set to cover a wide range of Tremolo effects. The Depth of the Tremolo is also variable being controlled by the Depth control.

OPERATION OF MICROPHONE

The high gain and high fidelity characteristics of this Amplifier, permit the use of most of the popular high impedance microphones for public address work. The microphone should be plugged into the Number One Jack of Channel 1.

SPECTRUM CONTROLS

The wide range of tonal extremes required by different artists can all be accommodated with Gibson Spectrum Control. For maximum loudness with a given power, the "treble" control should be Maximum, the "mid range" minimum, and the bass near 5. With this adjustment the tone controls on the guitar will have their maximum effectiveness.

"Jazz" sound to the artist taste can be had by reducing the "treble", adding some "mid range", and adjusting the "bass" to the artist requirement.

Spectrum Controls plus the tone controls on the artist's instrument offer an endless variety of tonal color.

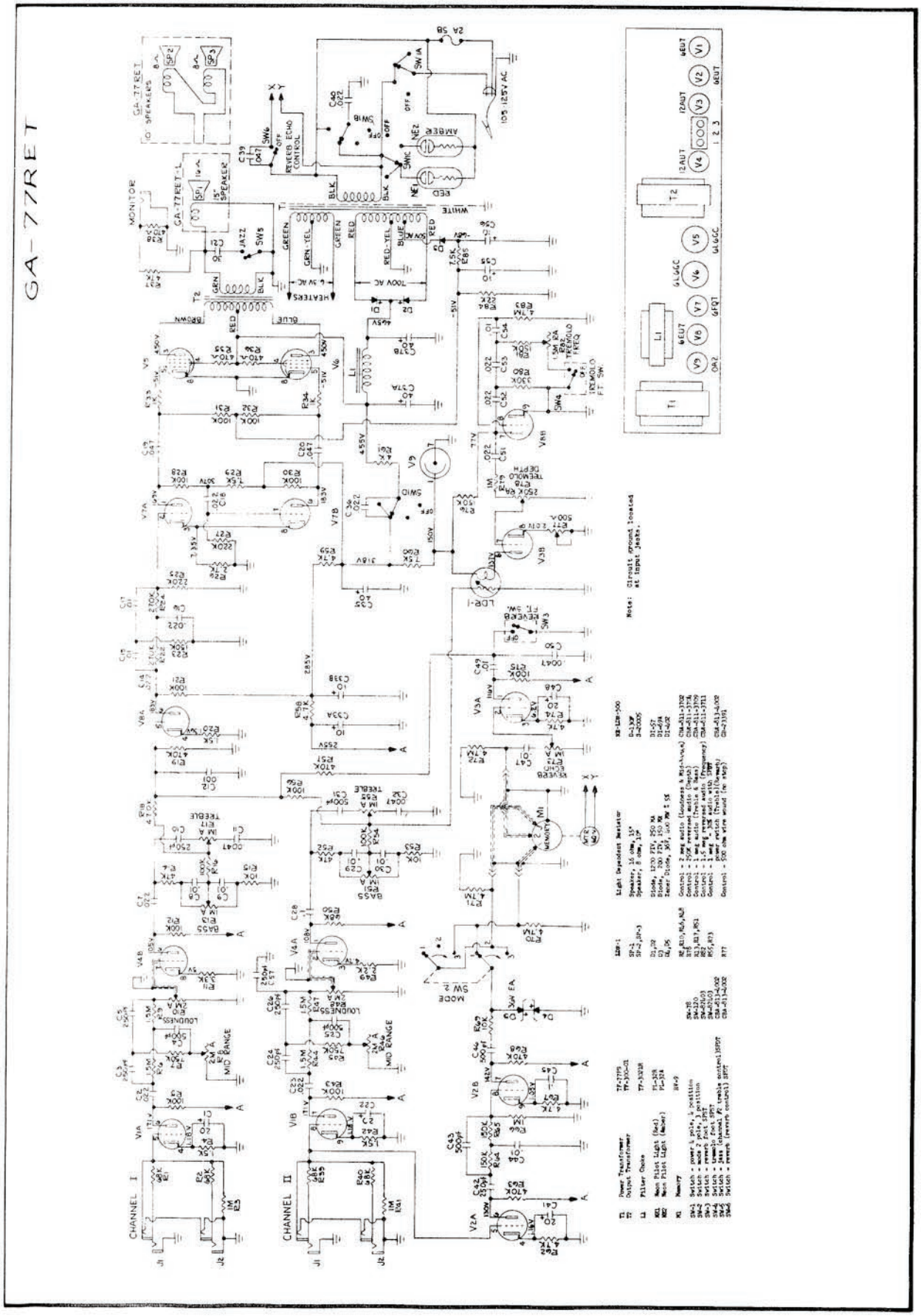

4-65 500 H.P.Co.

Gibson

Crestline Amplifier

MODEL GA-77RVT AMPLIFIER
VANGUARD

INSTRUCTIONS

PRODUCT OF

Gibson Electronics

KALAMAZOO, MICHIGAN

REVERB UNIT UNPACKING INSTRUCTIONS

IMPORTANT — READ CAREFULLY BEFORE USE

CAUTION

The Reverb Unit has been carefully constructed. It is, however, a delicate electronic device. Treat it with the same care and respect given a TV set.

Avoid dropping, sudden jolts, or rough handling and it will give excellent service. This beautifully musical Reverberation effect is not to be confused with the repeating signal produced by the mechanical tape recorder style of echo units.

UNPACKING

Amplifiers are carefully packed to prevent damage in shipment. However, upon receipt of the amplifier, examine carefully to determine if there has been breakage of tubes or parts. If damage has occurred during shipment, call the Transportation Company immediately, and place a claim.

TUBES

Make certain all tubes are seated firmly into their respective sockets. Each tube is labeled for proper replacement should any tube be out of its socket. Be especially careful when inserting tubes to see that the pins on the tube are correctly aligned with the holes in the socket before pushing into place. Do not twist tube — push tube straight into socket. It is advisable to check tubes from time to time depending on amount of use and excellence of performance. *Be sure tubes are always returned to proper sockets and seated firmly.*

REVERB POWER UNIT SET UP INSTRUCTIONS

CAUTION

Damage to the amplifier will result if it is connected to an improper power source. This amplifier is designed to be operated on 105-125 volt, 50-60 cycle alternating current only. The voltage from the power lines should not exceed 125, and the frequency of the current should be either 50 or 60 cycles. When ready to use power, insert the plug on the power cord into the electric outlet and move switch to "on." After approximately one minute for the tubes to heat, the amplifier is ready for use.

The Reverberation Unit must always be placed on a solid non-vibrating surface or footing when in operation.

Any sudden shock, jolt, or wiggle, when in use, will cause undesirable noise. The resultant clatter of an inadvertant shake or bump is annoying but not necessarily harmful. This delicate sensitivity to shock and vibration is a normal characteristic of the device.

No problem will be encountered while the unit is connected if supporting surface is solid and unit is not moved about. To avoid the unwanted noise, turn the reverberation unit off by pressing the foot switch.

OPERATION OF MICROPHONE

The high gain and high fidelity characteristics of this Amplifier, permit the use of most of the popular high impedance microphones for public address work. The microphone should be plugged into the Number One Jack of Channel 1.

If the Microphone jacks are not in use, turn the Channel one Loudness control completely off.

MODEL GA-77RVT AMPLIFIER

REVERBERATION — EFFECTIVE IN CHANNEL 2 ONLY

Due to the unusual flexibility of the Reverberation circuit, it is important that the Operator understands the various control settings to obtain the total range of Reverberation effects of which this Amplifier is capable. Illustrated below are several examples of control settings which will reproduce different Reverberation effects.

Loudness 2 Bass Treble Reverberation Depth Frequency

Example No. 1. 50% Main Signal - 50% Reverb.

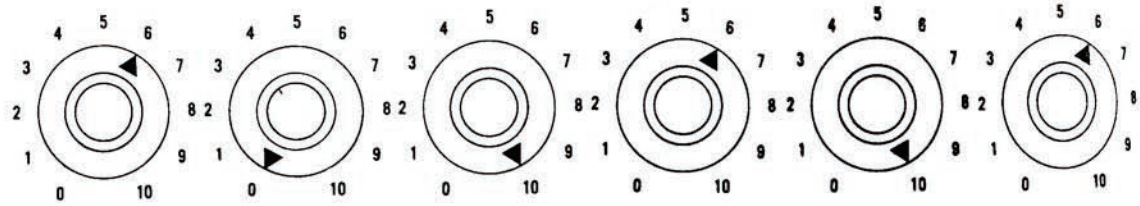

INSTRUMENT SETTINGS — Tone control and/or toggle switch in maximum treble position. Volume control setting 2½ to 3.

Example No. 2. 75% Main Signal - 25% Reverb.

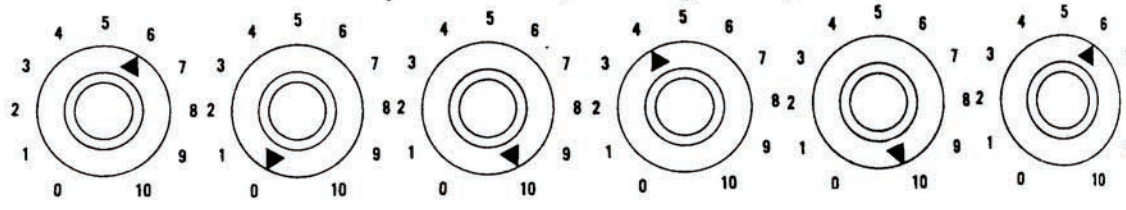

INSTRUMENT SETTINGS — Tone control same as above, Volume control setting 5 to 6.

Example No. 3. 25% Main Signal - 75% Reverb.

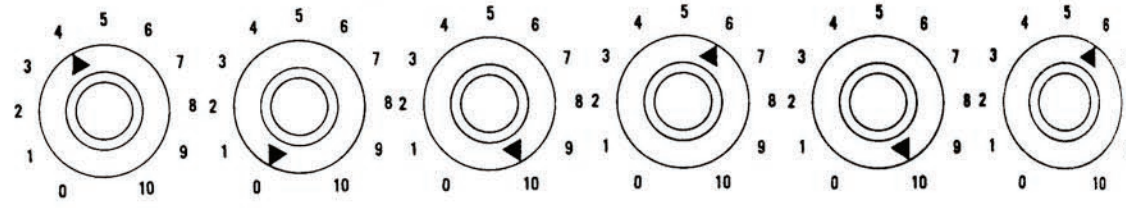

INSTRUMENT SETTINGS — Same as Example No. 2.

Example No. 4. 100% Reverb.

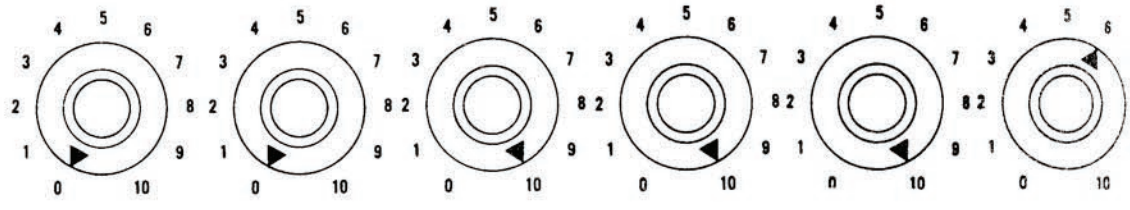

INSTRUMENT SETTINGS — Same as Example No. 2.

FOOT SWITCH MUST BE IN THE "ON" POSITION FOR REVERBERATION.

CONTROL LOCATIONS

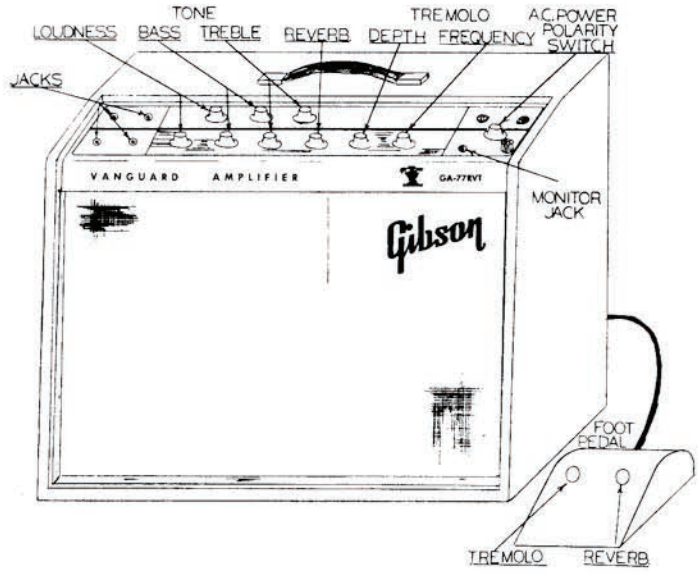

OPERATIONAL INSTRUCTIONS FOR USE OF THIS REVERBERATION AMPLIFIER IN CONJUNCTION WITH A REGULAR AMPLIFIER

The use of this Reverberation Amplifier with a Regular Amplifier will add a spacious liveliness to instrument reproduction that is far beyond the possibilities of single amplifier Reverberation. Listed below are the simple instructions for this type of operation.

1. Plug the A.C. cord of this Reverberation Amplifier into a convenient outlet.
2. Now plug one end of a shielded jumper cord into the No. 1 Jack of Channel 2 (the one with the Red Washer) Plug the other end of the jumper cord into the input jack normally used in a regular amplifier. Set regular amplifier for normal volume.
3. The Guitar instrument cord should be plugged into the No. 2 Jack of Channel 2 of this Reverberation Amplifier. Plug the A.C. line cord of the Regular Amplifier into a convenient outlet.
4. Turn on the A.C. switches for both amplifiers and the tone controls may be set as illustrated on page 2.
5. If both Reverb. and Normal Signals are to be heard at the regular Amplifier, plug the Shielded Jumper Cord into the Monitor Jack of this Reverberation Amplifier instead of the Jack with the Red Washer.

Illustrated below is a pictorial diagram showing the correct hook-up.

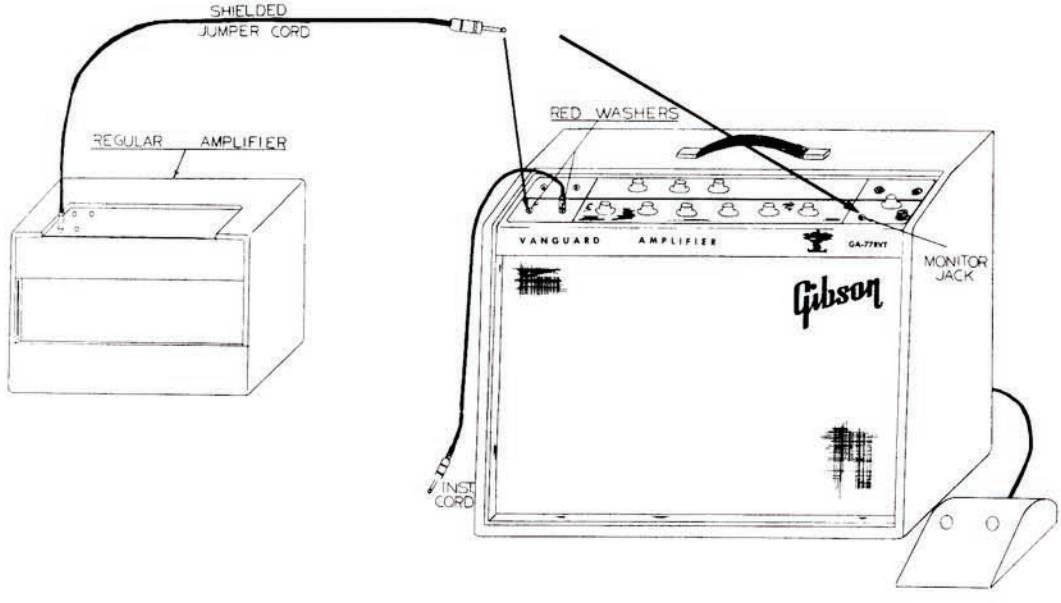

6. Place the combination reverberation, tremolo foot control switch in a convenient position and the system is ready to operate. Either, or both, reverberation and tremolo effect is available by switching the indicated switch ON or OFF.
7. The percentage of Reverberation can be controlled by the Reverberation Control, Channel 2 Loudness Control and the Volume Control of the Regular Amplifier.
8. The instrument is ready to be played. If reverb signal is not coming through, step on the foot switch as it may be in the OFF position. Thereafter, the reverb effect can be conveniently cut in or out at a snap of the foot switch.
9 When the Reverberation Foot Switch is OFF, the reverb unit operates as a regular amplifier adding an extra self-powered speaker that expands the regular amplifier sound without reverberation. If a cord length space separates the regular amplifier and the reverberation unit, an excellent impression of the "Stereo" and echo effect is obtained.
When Reverberation Foot Switch is ON, the reverb signal is super-imposed on the above "Stereo" sound with a minimum contrast of volume change.

TREMOLO — EFFECTIVE IN CHANNEL 2 ONLY

The Tremolo effect adds another dimension to the Reverberation effect. It can be used either with or without reverberation at the players discretion. The Tremolo is turned on or off by the use of the foot switch. The Tremolo Frequency Range has been carefully set to cover a wide range of Tremolo effects. The Depth of the Tremolo is also variable being controlled by the Depth control.

A.C. POWER-POLARITY SWITCH

A convenient switch has been provided for performing a total of three functions, turning the amplifier on and off, putting the amplifier in "Standby" and selecting the proper polarity of the power source which reduces the A.C. hum and other extraneous noises to a minimum. In the "Standby" position the amplifier is kept "warmed up" and ready to play at the instant the switch is advanced to the "On" positions. Two "On" positions have been provided. The hum and hiss level on one of the "On" positions will be noticeably lower — this is the correct "Polarity" for using the amplifier.

In locations of extremely high noise levels, clipping the "Ground Clip" to a grounded object will greatly reduce objectionable noise and hum.

As an added convenience to the artist this amplifier is equipped with a "Standby pilot light" as well as the "Regular pilot light". When the "Green" light is on the amplifier is in "Standby"; when the "Red" light is on the amplifier is "On" and ready to play.

FUSE

The fuse used in this Amplifier is a type 3AG of three amperes rating. DO NOT USE FUSES OF HIGHER RATING

SERVICE

If the amplifier is in need of servicing, it should be taken to a reliable radio man. The electrical diagram in this folder should be shown the repairman to assist him in servicing the amplifier.

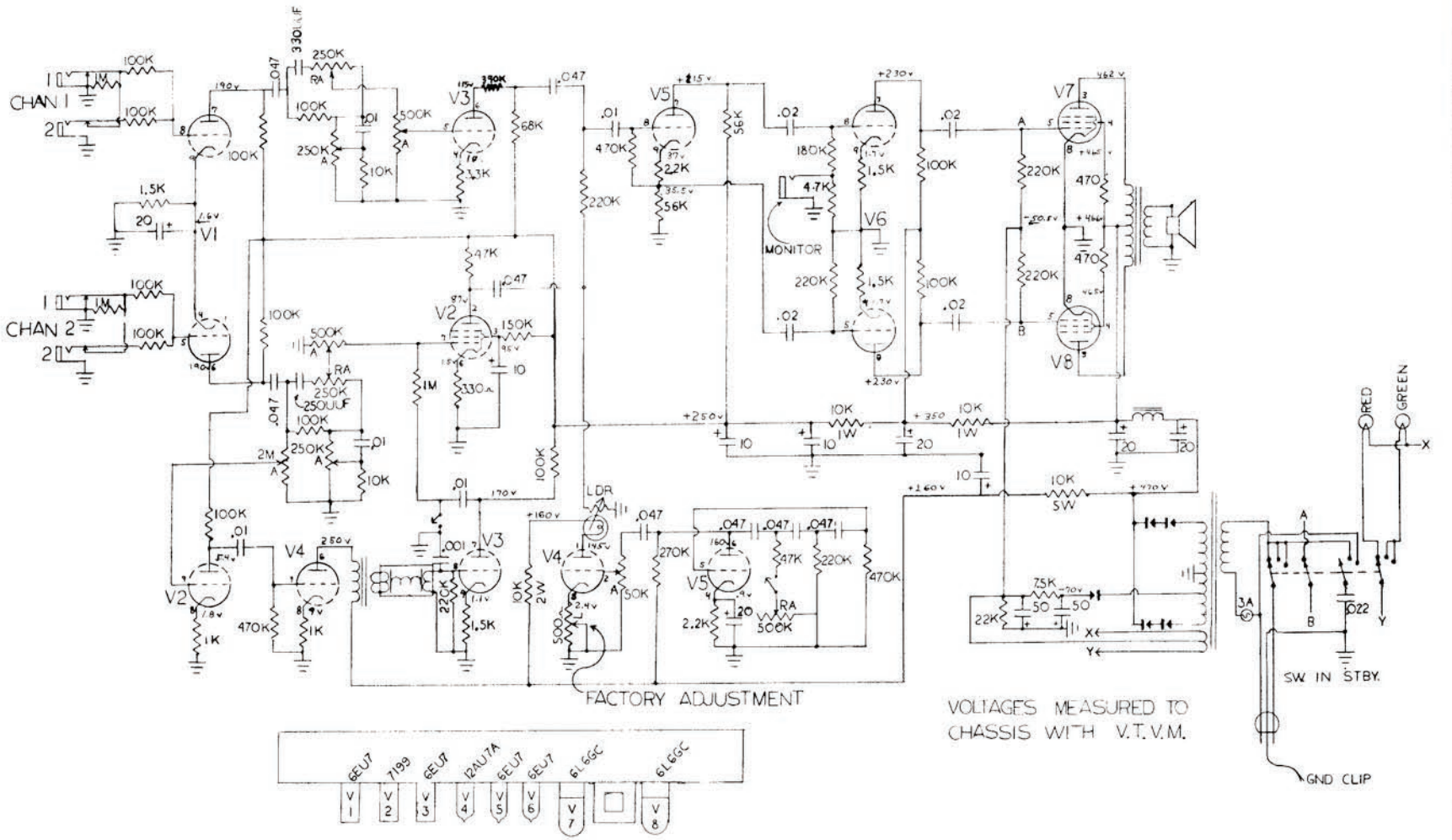
CHAN 1
CHAN 2
V1
V2
V3
V4
V5
V6
V7
V8
MONITOR
LDR
RED
GREEN
FACTORY ADJUSTMENT
VOLTAGES MEASURED TO CHASSIS WITH V.T.V.M.
SW IN STBY.
GND CLIP
6EU7
7199
6EU7
12AU7A
6EU7
6EU7
6L6GC
6L6GC

Bell 30 Stereo

MODEL GA-78 AMPLIFIER

INSTRUCTIONS

PRODUCT OF ELECTRONICS DIVISION, GIBSON INC., KALAMAZOO, MICH.

GA-78

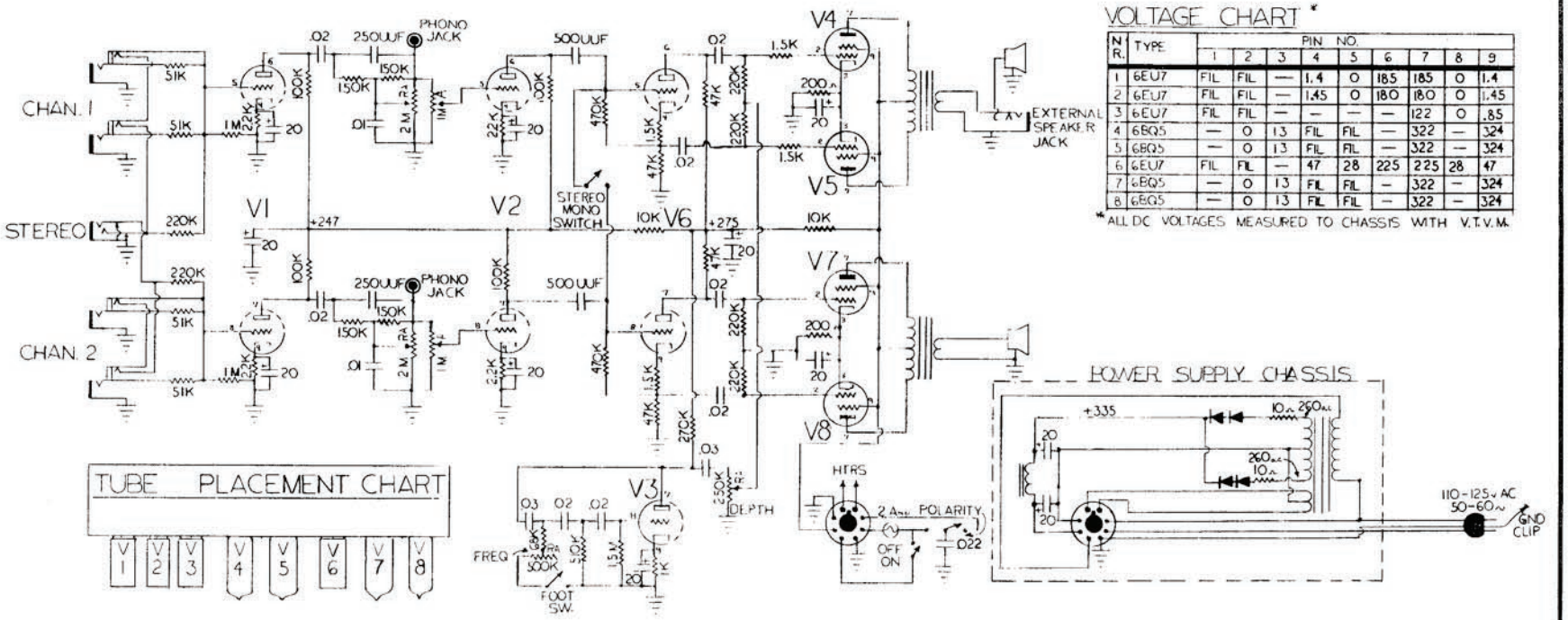

VOLTAGE CHART *

NR.	TYPE	PIN NO. 1	2	3	4	5	6	7	8	9
1	6EU7	FIL	FIL	—	1.4	0	185	185	0	1.4
2	6EU7	FIL	FIL	—	1.45	0	180	180	0	1.45
3	6EU7	FIL	FIL	—	—	—	—	122	0	.85
4	6BQ5	—	0	13	FIL	FIL	—	322	—	324
5	6BQ5	—	0	13	FIL	FIL	—	322	—	324
6	6EU7	FIL	FIL	—	47	28	225	225	28	47
7	6BQ5	—	0	13	FIL	FIL	—	322	—	324
8	6BQ5	—	0	13	FIL	FIL	—	322	—	324

* ALL DC VOLTAGES MEASURED TO CHASSIS WITH V.T.V.M.

TUBE PLACEMENT CHART

BELL 30 STEREO MODEL GA-78 AMPLIFIER

The Bell 30 Stereo is a true Stereo Amplifier having two completely independent channels with respective 15 watt power amplifiers. Each amplifier channel can be used independently by using the Stereo input jacks or they can be combined for 30 watt Monaural reproduction by moving the slide switch marked Stereo-Monaural to the Monaural position.

STEREO OPERATION

Place the slide switch marked Stereo-Monaural in the Stereo position.

If the Stereo instrument uses a special two conductor shield cable with a "Y" junction, place the plug associated with the Treble pick-up into either jack of channel No. 1 and the plug associated with the Bass pick-up into either jack of channel No. 2.

For instruments using two conductor shielded cable with single three circuit plugs on each end, place plug in center jack.

Set all controls as desired. The volume for each channel should be adjusted until the sound appears equal to the players ear. Tone control settings will affect the volume setting somewhat; therefore, the settings of the two volume controls will not necessarily be numerically identical.

MONAURAL OPERATION

Place the slide switch marked Stereo-Monaural in the Monaural position. This places the two channels in parallel and combines the output of both channels. Monaural instruments can now be used in either channel.

TREMOLO

The Tremolo action is effective on the treble or upper channel and is turned on and off by means of a push type switch. The Tremolo frequency is controlled by the variable control marked "Frequency." The speeds have been carefully set to cover a wide range of tremolo effects. The Depth of the Tremolo is also variable, being controlled by the Depth control.

POLARITY SWITCH

This added convenience enables the player to quickly find the polarity of the power source which reduces the A.C. hum and other extraneous noises to a minimum.

OPERATION OF MICROPHONE

The high gain and high fidelity characteristics of the Bell 30 Stereo Amplifier permit the use of most of the popular high impedance microphones for public address work. The microphone should be plugged into the Number 2 channel and it is not recommended that other instruments be used in conjunction with the microphone.

When using a microphone it is important that the Gibson 280 or similar shielded plug be attached to the cord. The ordinary phone plug with bakelite or other non-shielded cover is not suitable because the leads from the microphone must be completely shielded. Otherwise, objectionable hum will result. Figure A illustrates the proper way to connect the plug to the microphone cable. To use the microphone, insert the plug in the "Microphone" jack and advance the Microphone volume control until a feedback squeal or howl is produced on the loudspeaker. Reduce the volume control to just below the feedback point. This setting will vary considerably, depending upon the size of the room, its acoustical properties and the distance between the microphone and loudspeaker. Feedback is the limiting factor in all public address installations and is caused when the level of sound from the loudspeakers is sufficient to actuate the microphone. The general rule when setting up the equipment is to place the loudspeaker as far from the microphone as possible.



FIGURE A

GENERAL

Amplifiers are carefully packed to prevent damage in shipment. However, upon receipt of the Amplifier, examine carefully to determine if there has been breakage of tubes or parts. If damage has occurred during shipment, the Transportation Company should be notified immediately, and a claim placed.

CAUTION

Damage to the Amplifier will result if it is connected to an improper power source. This Amplifier is designed to be operated on 105 - 125 volt, 50 - 60 cycle alternating current ONLY. Check the voltage from the power lines to determine that it is not over 125 volts, and that the frequency of the current is either 50 or 60 cycles.

When ready to use power, plug the power cord into the electric outlet and move the switch to the ON position. Approximately one minute is required for the tubes to heat before the Amplifier is ready for use.

TUBES

Check tubes for proper positioning before placing the Amplifier in operation. All tubes have been tested and proved satisfactory before shipment.

SERVICE

If the Amplifier is in need of servicing, consult a reliable radio man. The electrical diagram herein should be shown to the repairman to assist him in servicing the Amplifier.

FUSE

The fuse used in the Bell 30 Stereo Amplifier is a type 3AG of two ampere rating.
DO NOT USE A FUSE OF HIGHER RATING.

Maestro

MAESTRO STEREO 30

MODEL GA-78RV

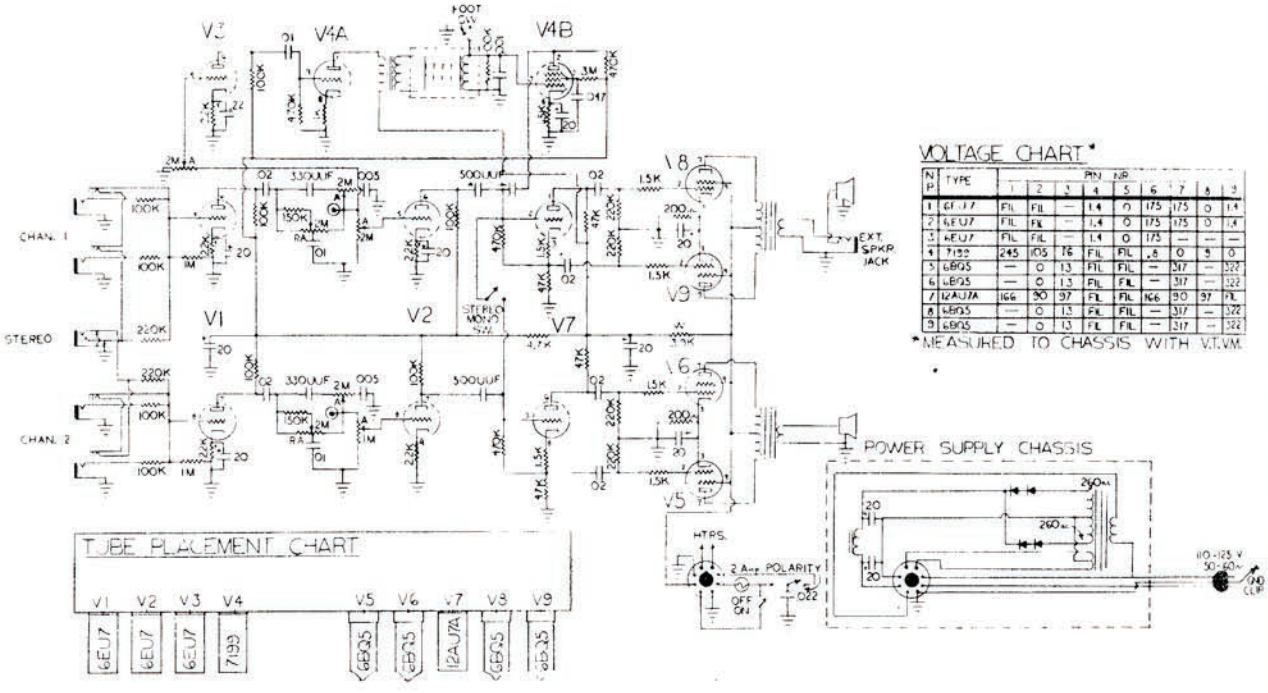

VOLTAGE CHART*

N/P	TYPE	PIN NR								
			2	3	4	5	6	7	8	9
1	6EU7	FIL	FIL	—	1.4	0	175	175	0	1.4
2	6EU7	FIL	FIL	—	1.4	0	175	175	0	1.4
3	6EU7	FIL	FIL	—	1.4	0	175	—	—	—
4	7199	245	105	76	FIL	FIL	.8	0	8	0
5	6BQ5	—	0	13	FIL	FIL	—	317	—	322
6	6BQ5	—	0	13	FIL	FIL	—	317	—	322
7	12AU7A	166	90	97	FIL	FIL	166	90	97	FIL
8	6BQ5	—	0	13	FIL	FIL	—	317	—	322
9	6BQ5	—	0	13	FIL	FIL	—	317	—	322

*MEASURED TO CHASSIS WITH V.T.V.M.

PRODUCT OF ELECTRONICS DIVISION, GIBSON INC., KALAMAZOO, MICH.

REVERBERATION — EFFECTIVE IN CHANNEL 1 ONLY

An exciting new dimension of sound providing Concert Hall effects in any size room.

The Reverberation unit is mounted vertically inside the center front of the Amplifier Case. The Reverberation mechanism is equipped with a locking device which provides protection for the mechanism during transportation. Before operating the Amplifier, unlock the Reverberation unit by pressing the Red Lever up until it is in a vertical position. Remote control of the Reverberation effect is accomplished by an Off-On foot switch with fifteen feet of cable.

Due to the unusual flexibility of the GA-78RV Reverberation circuit, it is important that the Operator understands the various control settings to obtain the total range of Reverberation effects of which this Amplifier is capable. Illustrated below are several examples of control settings which will reproduce different Reverberation effects.

Volume 1 Bass Treble Reverberation

Example No. 1. 50% Main Signal - 50% Reverb.

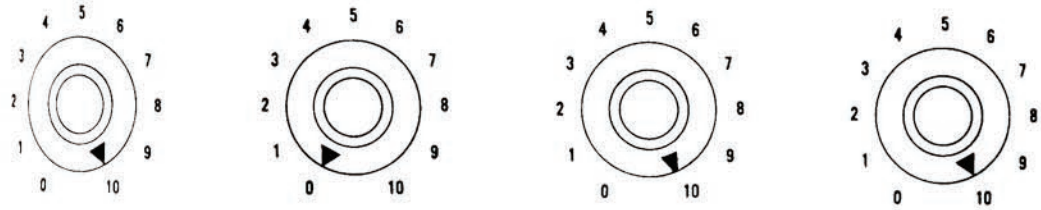

INSTRUMENT SETTINGS — Tone control and/or toggle switch in maximum treble position. Volume control setting 2½ to 3.

Example No. 2. 75% Main Signal - 25% Reverb.

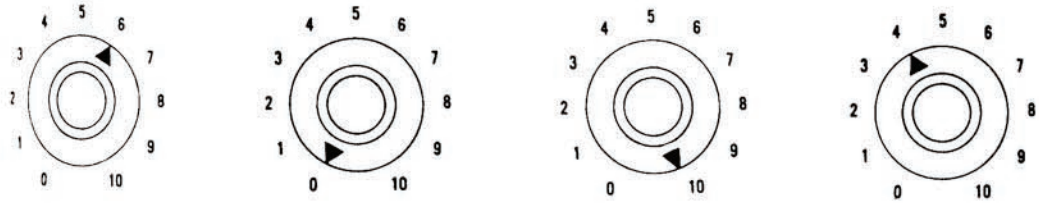

INSTRUMENT SETTINGS — Tone control same as above, Volume control setting 5 to 6.

Example No. 3. 25% Main Signal - 75% Reverb.

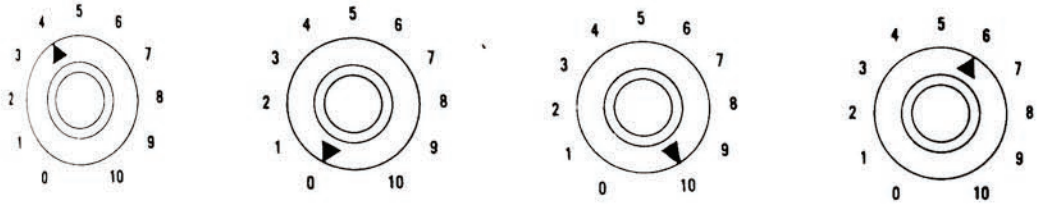

INSTRUMENT SETTINGS — Same as Example No. 2.

Example No. 4. 100% Reverb.

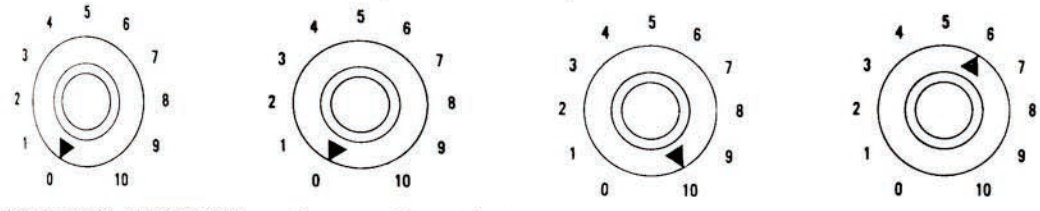

INSTRUMENT SETTINGS — Same as Example No. 2.

FOOT SWITCH MUST BE IN THE "ON" POSITION FOR REVERBERATION.

IMPORTANT — Always lock the Reverberation mechanism by lowering the Red Lever until it stops (horizontal position) before transporting the Amplifier. Failure to do so may cause severe damage to the Reverberation unit.

POLARITY SWITCH

This added convenience enables the player to quickly find the polarity of the power source which reduces the A.C. hum and other extraneous noises to a minimum.

OPERATION OF MICROPHONE

The high gain and high fidelity characteristics of the GA-78RV Amplifier permit the use of most of the popular high impedance microphones for public address work. The microphone should be plugged into the Number 2 channel and it is not recommended that other instruments be used in conjunction with the microphone.

When using a microphone it is important that the Gibson 280 or similar shielded plug be attached to the cord. The ordinary phone plug with bakelite or other non-shielded cover is not suitable because the leads from the microphone must be completely shielded. Otherwise, objectionable hum will result. Figure A illustrates the proper way to connect the plug to the microphone cable. To use the microphone, insert the plug in the "Microphone" jack and advance the Microphone volume control until a feedback squeal or howl is produced on the loudspeaker. Reduce the volume control to just below the feedback point. This setting will vary considerably, depending upon the size of the room, its acoustical properties and the distance between the microphone and loudspeaker. Feedback is the limiting factor in all public address installations and is caused when the level of sound from the loudspeakers is sufficient to actuate the microphone. The general rule when setting up the equipment is to place the loudspeaker as far from the microphone as possible.



FIGURE A

GENERAL

Amplifiers are carefully packed to prevent damage in shipment. However, upon receipt of the Amplifier, examine carefully to determine if there has been breakage of tubes or parts. If damage has occurred during shipment, the Transportation Company should be notified immediately, and a claim placed.

CAUTION

Damage to the Amplifier will result if it is connected to an improper power source. This Amplifier is designed to be operated on 105 - 125 volt, 50 - 60 cycle alternating current ONLY. Check the voltage from the power lines to determine that it is not over 125 volts, and that the frequency of the current is either 50 or 60 cycles.

When ready to use power, plug the power cord into the electric outlet and move the switch to the ON position. Approximately one minute is required for the tubes to heat before the Amplifier is ready for use.

TUBES

Check tubes for proper positioning before placing the Amplifier in operation. All tubes have been tested and proved satisfactory before shipment.

SERVICE

If the Amplifier is in need of servicing, consult a reliable radio man. The electrical diagram herein should be shown to the repairman to assist him in servicing the Amplifier.

FUSE

The fuse used in the GA-78RV Amplifier is a type 3AG of two ampere rating.
DO NOT USE A FUSE OF HIGHER RATING.

GIBSON

MULTI-PURPOSE
MODEL GA-79 AMPLIFIER

INSTRUCTIONS

GIBSON INC., KALAMAZOO, MICHIGAN

GA-79

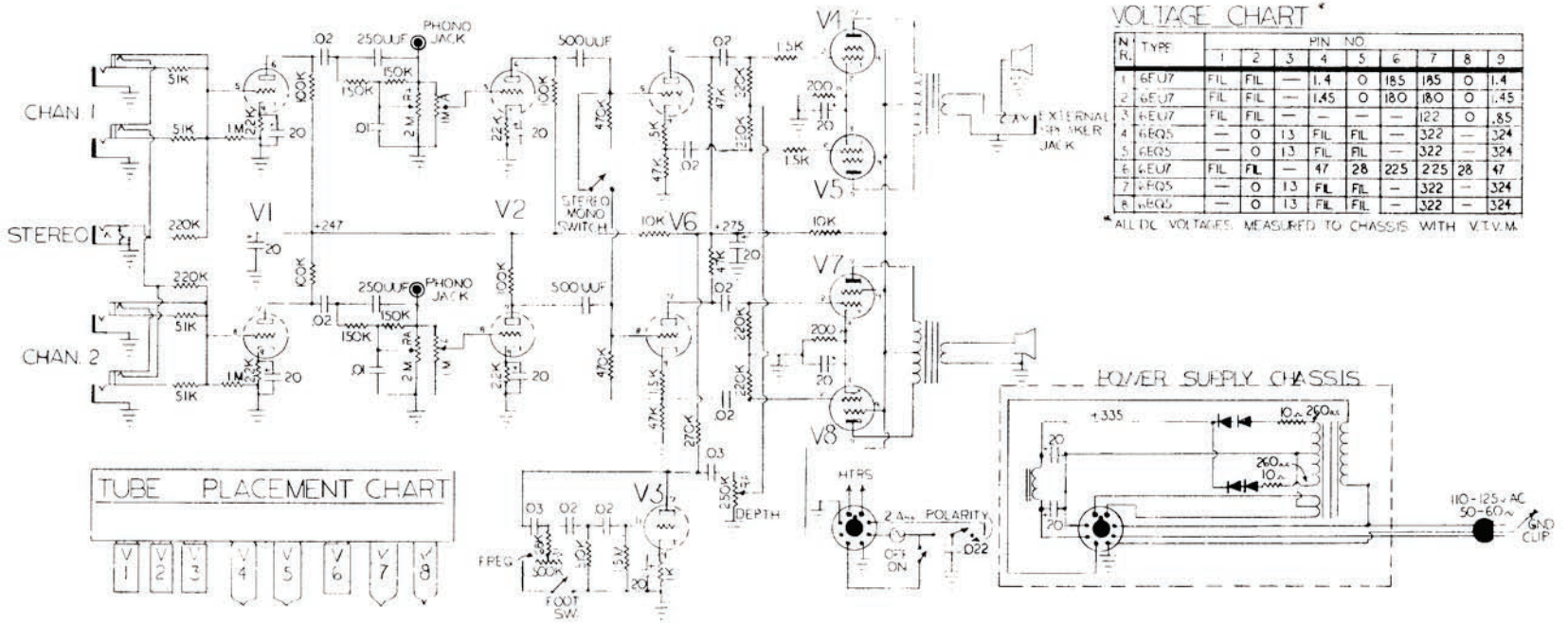

VOLTAGE CHART *

NR.	TYPE	PIN NO. 1	2	3	4	5	6	7	8	9
1	6EU7	FIL	FIL	—	1.4	0	185	185	0	1.4
2	6EU7	FIL	FIL	—	1.45	0	180	180	0	1.45
3	6EU7	FIL	FIL	—	—	—	—	122	0	1.85
4	6BQ5	—	0	13	FIL	FIL	—	322	—	324
5	6BQ5	—	0	13	FIL	FIL	—	322	—	324
6	6EU7	FIL	FIL	—	47	28	225	225	28	47
7	6BQ5	—	0	13	FIL	FIL	—	322	—	324
8	6BQ5	—	0	13	FIL	FIL	—	322	—	324

* ALL DC VOLTAGES MEASURED TO CHASSIS WITH V.T.V.M.

GIBSON MULTI-PURPOSE GA-79 AMPLIFIER

The Multi-Purpose is a true Stereo Amplifier having two completely independent channels with respective 15 watt power amplifiers. Each amplifier channel can be used independently by using the Stereo input jacks or they can be combined for 30 watt Monaural reproduction by moving the slide switch marked Stereo-Monaural to the Monaural position.

STEREO OPERATION

Place the slide switch marked Stereo-Monaural in the Stereo position.

If the Stereo instrument uses a special two conductor shield cable with a "Y" junction, place the plug associated with the Treble pick-up into either jack of channel No. 1 and the plug associated with the Bass pick-up into either jack of channel No. 2.

For instruments using two conductor shielded cable with single three circuit plugs on each end, place plug in center jack.

Set all controls as desired. The volume for each channel should be adjusted until the sound appears equal to the players ear. Tone control settings will affect the volume setting somewhat; therefore, the settings of the two volume controls will not necessarily be numerically identical.

MONAURAL OPERATION

Place the slide switch marked Stereo-Monaural in the Monaural position. This places the two channels in parallel and combines the output of both channels. Monaural instruments can now be used in either channel.

TREMOLO

The Tremolo action is effective on the treble or upper channel and is turned on and off by means of a push type switch. The Tremolo frequency is controlled by the variable control marked "Frequency." The speeds have been carefully set to cover a wide range of tremolo effects. The Depth of the Tremolo is also variable, being controlled by the Depth control.

POLARITY SWITCH

This added convenience enables the player to quickly find the polarity of the power source which reduces the A.C. hum and other extraneous noises to a minimum.

OPERATION OF MICROPHONE

The high gain and high fidelity characteristics of the Multi-Purpose Amplifier permit the use of most of the popular high impedance microphones for public address work. The microphone should be plugged into the Number 2 channel and it is not recommended that other instruments be used in conjunction with the microphone.

When using a microphone it is important that the Gibson 280 or similar shielded plug be attached to the cord. The ordinary phone plug with bakelite or other non-shielded cover is not suitable because the leads from the microphone must be completely shielded. Otherwise, objectionable hum will result. Figure A illustrates the proper way to connect the plug to the microphone cable. To use the microphone, insert the plug in the "Microphone" jack and advance the Microphone volume control until a feedback squeal or howl is produced on the loudspeaker. Reduce the volume control to just below the feedback point. This setting will vary considerably, depending upon the size of the room, its acoustical properties and the distance between the microphone and loudspeaker. Feedback is the limiting factor in all public address installations and is caused when the level of sound from the loudspeakers is sufficient to actuate the microphone. The general rule when setting up the equipment is to place the loudspeaker as far from the microphone as possible.

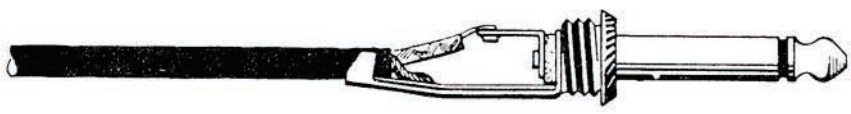

FIGURE A

GENERAL

Amplifiers are carefully packed to prevent damage in shipment. However, upon receipt of the Amplifier, examine carefully to determine if there has been breakage of tubes or parts. If damage has occurred during shipment, the Transportation Company should be notified immediately, and a claim placed.

CAUTION

Damage to the Amplifier will result if it is connected to an improper power source. This Amplifier is designed to be operated on 105 - 125 volt, 50 - 60 cycle alternating current ONLY. Check the voltage from the power lines to determine that it is not over 125 volts, and that the frequency of the current is either 50 or 60 cycles.

When ready to use power, plug the power cord into the electric outlet and move the switch to the ON position. Approximately one minute is required for the tubes to heat before the Amplifier is ready for use.

TUBES

Check tubes for proper positioning before placing the Amplifier in operation. All tubes have been tested and proved satisfactory before shipment.

SERVICE

If the Amplifier is in need of servicing, consult a reliable radio man. The electrical diagram herein should be shown to the repairman to assist him in servicing the Amplifier.

FUSE

The fuse used in the Multi-Purpose Amplifier is a type 3AG of two ampere rating.
DO NOT USE A FUSE OF HIGHER RATING.

GIBSON

STEREO-REVERB.-TREMOLO
MODEL GA-79RVT AMPLIFIER

INSTRUCTIONS

GIBSON INC., KALAMAZOO, MICH.

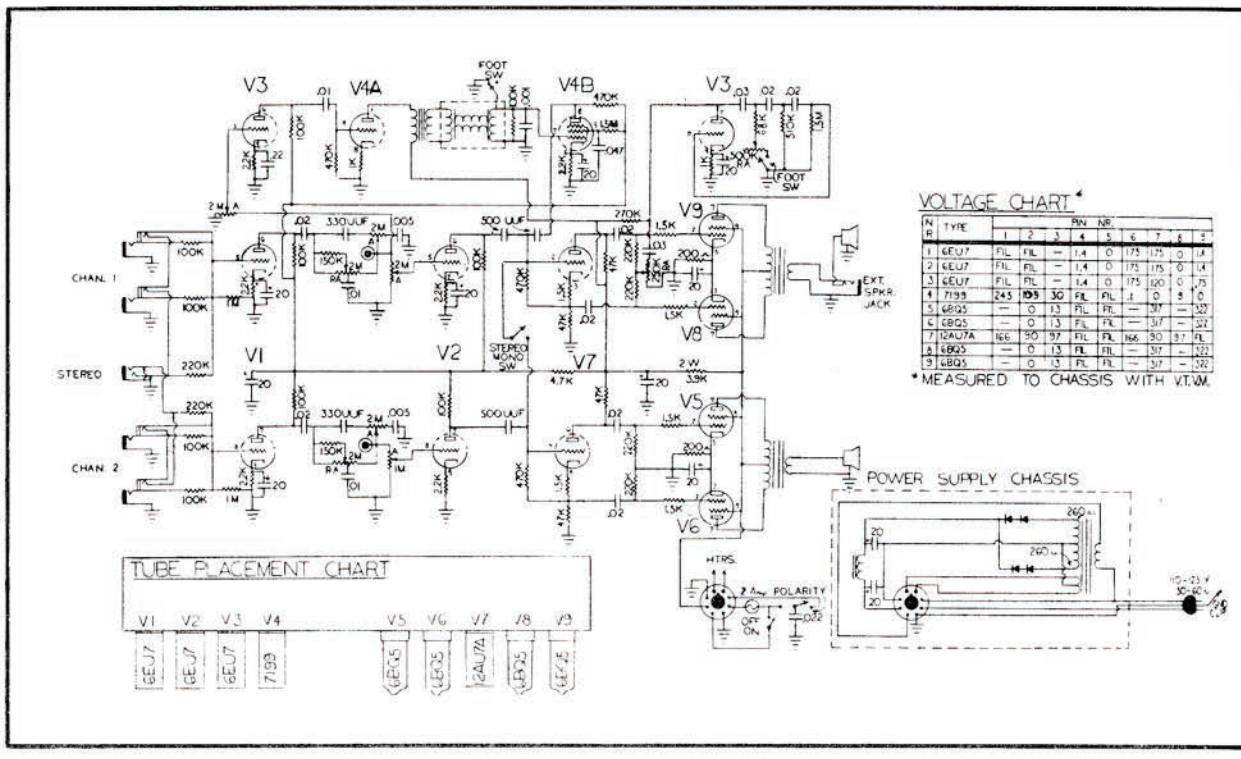

5C 2-62 HPCo.

GIBSON STEREO-REVERB.-TREMOLO GA-79RVT AMPLIFIER

The GA-79RVT is a true Stereo Amplifier having two completely independent channels with respective 15 watt power amplifiers. Each amplifier channel can be used independently by using the Stereo input jacks or they can be combined for 30 watt Monaural reproduction by moving the slide switch marked Stereo-Monaural to the Monaural position.

STEREO OPERATION

Place the slide switch marked Stereo-Monaural in the Stereo position.

If the Stereo instrument uses a special two conductor shield cable with a "Y" junction, place the plug associated with the Treble pick-up into either jack of channel No. 1 and the plug associated with the Bass pick-up into either jack of channel No. 2.

For instruments using two conductor shielded cable with single three circuit plugs on each end, place plug in center jack.

Set all controls as desired. The volume for each channel should be adjusted until the sound appears equal to the players ear. Tone control settings will affect the volume setting somewhat; therefore, the settings of the two volume controls will not necessarily be numerically identical.

MONAURAL OPERATION

Place the slide switch marked Stereo-Monaural in the Monaural position. This places the two channels in parallel and combines the output of both channels. Monaural instruments can now be used in either channel.

REVERBERATION — EFFECTIVE IN CHANNEL 1 ONLY

An exciting new dimension of sound providing Concert Hall effects in any size room.

The Reverberation unit is mounted vertically inside the center front of the Amplifier Case. The Reverberation mechanism is equipped with a locking device which provides protection for the mechanism during transportation. Before operating the Amplifier, unlock the Reverberation unit by pressing the Red Lever up until it is in a vertical position. Remote control of the Reverberation effect is accomplished by an Off-On foot switch with fifteen feet of cable.

Due to the unusual flexibility of the GA-79RVT Reverberation circuit, it is important that the Operator understands the various control settings to obtain the total range of Reverberation effects of which this Amplifier is capable. Illustrated below are several examples of control settings which will reproduce different Reverberation effects.

Volume 1 — ● Treble ◯ Bass — ● Frequency ◯ Depth — Reverberation

Example No. 1. 50% Main Signal - 50% Reverb.

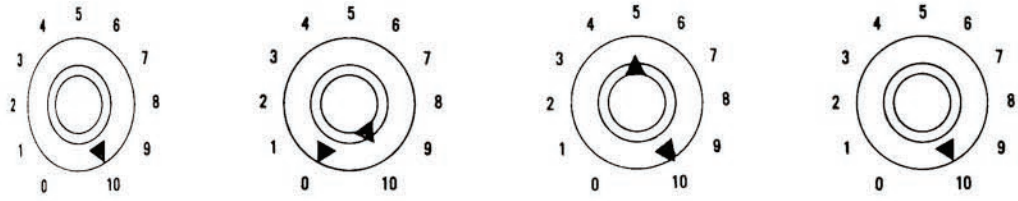

INSTRUMENT SETTINGS — Tone control and/or toggle switch in maximum treble position. Volume control setting 2½ to 3.

Example No. 2. 75% Main Signal - 25% Reverb.

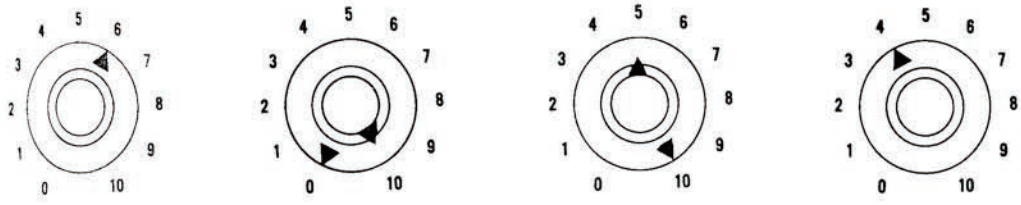

INSTRUMENT SETTINGS — Tone control same as above, Volume control setting 5 to 6.

Example No. 3. 25% Main Signal - 75% Reverb.

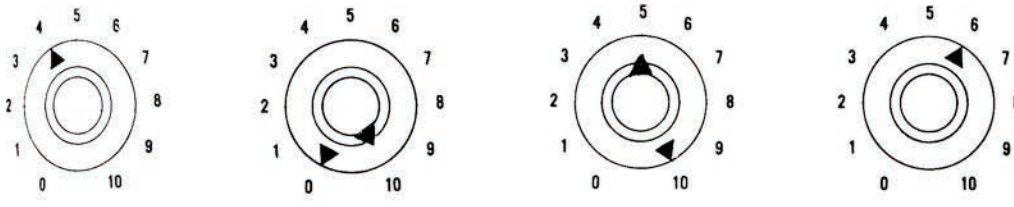

INSTRUMENT SETTINGS — Same as Example No. 2.

Example No. 4. 100% Reverb.

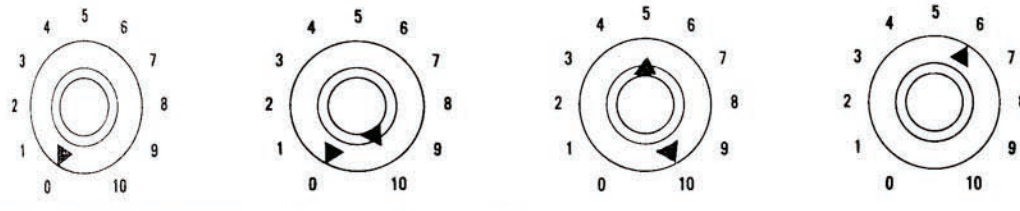

INSTRUMENT SETTINGS — Same as Example No. 2.

FOOT SWITCH MUST BE IN THE "ON" POSITION FOR REVERBERATION.

IMPORTANT — Always lock the Reverberation mechanism by lowering the Red Lever until it stops (horizontal position) before transporting the Amplifier. Failure to do so may cause severe damage to the Reverberation unit.

TREMOLO

The Tremolo action is effective on the treble or upper channel and is turned on and off by means of a push type switch. The Tremolo frequency is controlled by the variable control marked "Frequency." The speeds have been carefully set to cover a wide range of tremolo effects. The Depth of the Tremolo is also variable, being controlled by the Depth control.

POLARITY SWITCH

This added convenience enables the player to quickly find the polarity of the power source which reduces the A.C. hum and other extraneous noises to a minimum.

OPERATION OF MICROPHONE

The high gain and high fidelity characteristics of the GA-79RVT Amplifier permit the use of most of the popular high impedance microphones for public address work. The microphone should be plugged into the Number 2 channel and it is not recommended that other instruments be used in conjunction with the microphone.

When using a microphone it is important that the Gibson 280 or similar shielded plug be attached to the cord. The ordinary phone plug with bakelite or other non-shielded cover is not suitable because the leads from the microphone must be completely shielded. Otherwise, objectionable hum will result. Figure A illustrates the proper way to connect the plug to the microphone cable. To use the microphone, insert the plug in the "Microphone" jack and advance the Microphone volume control until a feedback squeal or howl is produced on the loudspeaker. Reduce the volume control to just below the feedback point. This setting will vary considerably, depending upon the size of the room, its acoustical properties and the distance between the microphone and loudspeaker. Feedback is the limiting factor in all public address installations and is caused when the level of sound from the loudspeakers is sufficient to actuate the microphone. The general rule when setting up the equipment is to place the loudspeaker as far from the microphone as possible.



FIGURE A

GENERAL

Amplifiers are carefully packed to prevent damage in shipment. However, upon receipt of the Amplifier, examine carefully to determine if there has been breakage of tubes or parts. If damage has occurred during shipment, the Transportation Company should be notified immediately, and a claim placed.

CAUTION

Damage to the Amplifier will result if it is connected to an improper power source. This Amplifier is designed to be operated on 105 - 125 volt, 50 - 60 cycle alternating current ONLY. Check the voltage from the power lines to determine that it is not over 125 volts, and that the frequency of the current is either 50 or 60 cycles.

When ready to use power, plug the power cord into the electric outlet and move the switch to the ON position. Approximately one minute is required for the tubes to heat before the Amplifier is ready for use.

TUBES

Check tubes for proper positioning before placing the Amplifier in operation. All tubes have been tested and proved satisfactory before shipment.

SERVICE

If the Amplifier is in need of servicing, consult a reliable radio man. The electrical diagram herein should be shown to the repairman to assist him in servicing the Amplifier.

FUSE

The fuse used in the GA-79RVT Amplifier is a type 3AG of two ampere rating.
DO NOT USE A FUSE OF HIGHER RATING.

GIBSON

VARI-TONE AMPLIFIER

GA-80

INSTRUCTIONS

GIBSON INC., KALAMAZOO, MICHIGAN

GA-80

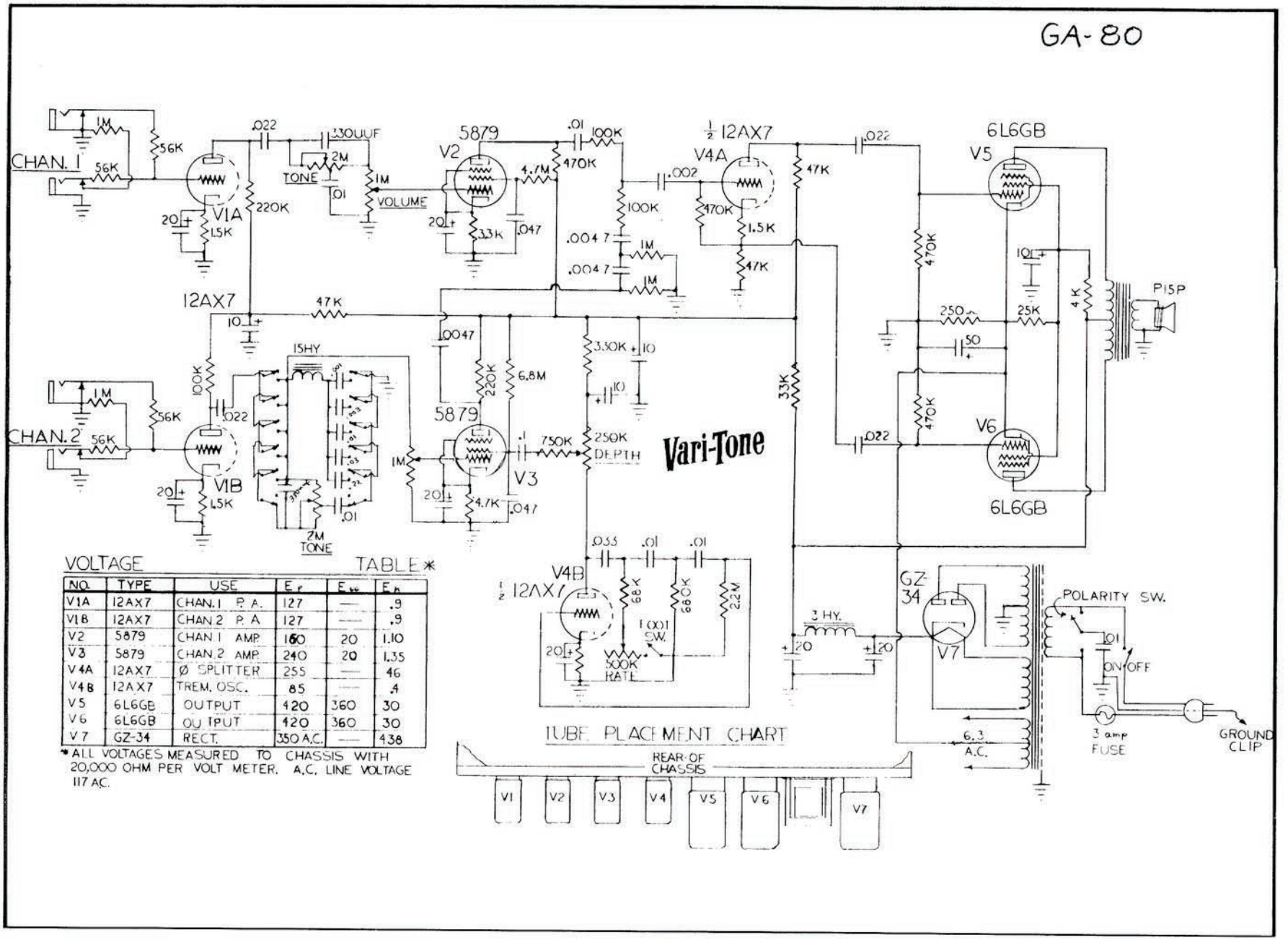

VOLTAGE TABLE *

NO.	TYPE	USE	E_p	E_{ss}	E_n
V1A	12AX7	CHAN. 1 P. A.	127	—	.9
V1B	12AX7	CHAN. 2 P. A	127	—	.9
V2	5879	CHAN. 1 AMP.	160	20	1.10
V3	5879	CHAN. 2 AMP.	240	20	1.35
V4A	12AX7	Ø SPLITTER	255	—	46
V4B	12AX7	TREM. OSC.	85	—	.4
V5	6L6GB	OUTPUT	420	360	30
V6	6L6GB	OUTPUT	420	360	30
V7	GZ-34	RECT.	350 A.C.	—	438

* ALL VOLTAGES MEASURED TO CHASSIS WITH 20,000 OHM PER VOLT METER. A.C. LINE VOLTAGE 117 A.C.

TUBE PLACEMENT CHART

GIBSON VARI-TONE AMPLIFIER — MODEL GA-80

The Gibson Vari-Tone amplifier is the latest and finest development in instrument amplifiers aimed at providing the guitar player with the widest possible selection of tone colorings.

POWER OUTPUT:

The Gibson Vari-Tone amplifier is a high fidelity amplifier capable of a normal output of 25 watts and peak output in excess of 35 watts.

FOUR INPUT CIRCUITS:

Four high gain input jacks for various combinations of electronic instruments and microphone adjustable to a wide variety of volume and tone coloring.

VARI-TONE SELECTOR, CHANNEL 2:

The six pre-set push button switches place a wide choice of tone colorings at the player's command. This extremely versatile Vari-Tone Selector has six fundamental positions. Pushing the first or Number I push button switches the amplifier to conventional operation, the regular tone control providing a wide range of tonal variations. Push buttons II through VI provides five pre-set tonal colorations, that are entirely new. These colorations add new dimensions to the amplified guitar sound.

15" HEAVY DUTY SPEAKER:

The 15" heavy duty speaker used in the Gibson Vari-Tone amplifier has been designed especially for instrument reproduction. The sturdy felted cone and the heavy duty new type Alnico V magnet assures a stable frequency response over a much longer period of time than was possible with older types of cones and magnets.

POLARITY SWITCH:

This added convenience enables the player to quickly find the polarity of the power source which reduces the A.C. hum and other extraneous noises to a minimum.

TREMOLO:

This improved tremolo has been carefully designed to operate only in the No. 2 Channel, thereby making it possible to use a microphone or a second and third instrument in Channel No. 1 without interaction from the tremolo.

MICROPHONE OPERATION:

Because of the high power output, high gain, and high fidelity characteristics of the Gibson Vari-Tone amplifier, it makes an exceptionally fine public address system when used with either the crystal, dynamic or velocity types of microphones.

While the amplifier will operate very well with any of the above mentioned microphones, it is recommended that a Gibson dealer be consulted before investing in a new microphone. Authorized Gibson dealers can supply a microphone which has been selected and matched to this amplifier, thus insuring the most faithful reproduction of voice and music.

When using a microphone it is important that a shielded plug be attached to the cable. The ordinary phone plug with bakelite or other non-shielded cover is not suitable because the leads from the microphone must be completely shielded. Otherwise objectional hum will result. Figure A illustrates the proper way to connect the plug to the microphone cable. To use the microphone, insert the plug in the MICROPHONE socket and advance the Microphone Volume Control until a feedback squeal or howl is produced by the loudspeakers. Reduce the Volume Control to just below the feedback point. This setting will vary considerably depending upon the size of the room, its acoustical properties and the distance between the microphone and the loudspeaker. Feedback is the limiting factor in all public address installations and is caused when the level of sound from the loudspeakers is sufficient to actuate the microphone. The general rule when setting up the equipment is to place the loudspeaker as far from the microphone as possible.



FIGURE A

GENERAL

Amplifiers are carefully packed to prevent damage in shipment. However, upon receipt of the Amplifier, examine carefully to determine if there has been breakage of tubes or parts. If damage has occured during shipment, the Transportation Company should be notified immediately, and a claim placed.

CAUTION

Damage to the Amplifier will result if it is connected to an improper power source. This amplifier is designed to be operated on 105 - 125 volt, 50 - 60 cycle alternating current ONLY. Check the voltage from the power lines to determine that it is not over 125 volts, and the frequency of the current is either 50 or 60 cycles.

When ready to use power, plug the power cord into the electric outlet and move the switch to the ON position. Approximately one minute is required for the tubes to heat before the Amplifier is ready to use.

TUBES

Check tubes for proper positioning before placing the Amplifier in operation. All tubes have been tested and proved satisfactory before shipment.

GROUND CLIP

The AC Line Cord is equipped with an externai Ground Clip that can be attached to any grounded object such as a water pipe, steam radiator, or to a grounded circuit such as is used in recording and broadcasting studios. This reduces extraneous noises and hum — a feature very essential for top notch performance.

SERVICE

If the Amplifier is in need of servicing, consult a reliable radio man. The electrical diagram attached to the amplifier will assist the repair man in servicing.

FUSE

The fuse in the GA-80 Vari-Tone Amplifier is a type 3AG Slo-Blo of three ampere rating. DO NOT USE A FUSE OF HIGHER RATING.

GIBSON

MODEL GA-83S STEREO-VIB AMPLIFIER

INSTRUCTIONS

GIBSON INC., KALAMAZOO, MICH.

GA-83S
STEREO-VIB

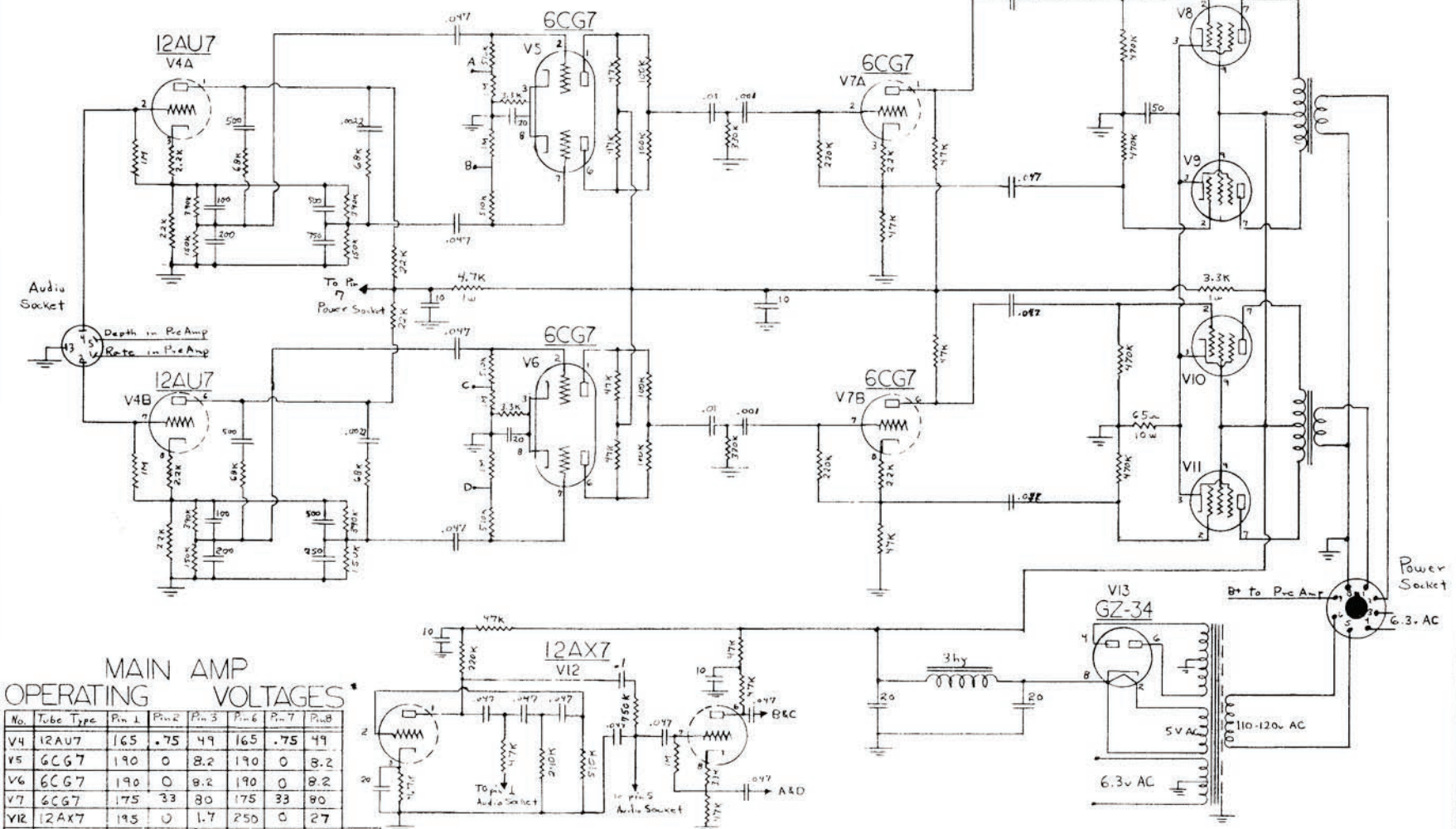

MAIN AMP OPERATING VOLTAGES*

No.	Tube Type	Pin 1	Pin 2	Pin 3	Pin 6	Pin 7	Pin 8
V4	12AU7	165	.75	49	165	.75	49
V5	6CG7	190	0	8.2	190	0	8.2
V6	6CG7	190	0	8.2	190	0	8.2
V7	6CG7	175	33	80	175	33	80
V12	12AX7	195	0	1.7	250	0	27
—	—	—	Pin 2	Pin 3	Pin 4	Pin 6	Pin 7	Pin 8	Pin 9
V8	6BQ5	0	10.8	—	—	308	—	315
V9	6BQ5	0	10.8	—	—	308	—	315
V10	6BQ5	0	10.8	—	—	308	—	315
V11	6BQ5	0	10.8	—	—	308	—	315
V13	GZ-34	5 AC	—	310 AC	310 AC	—	322	—

*ALL DC VOLTAGES MEASURED TO CHASSIS WITH 20000 OHM PER VOLT METER.

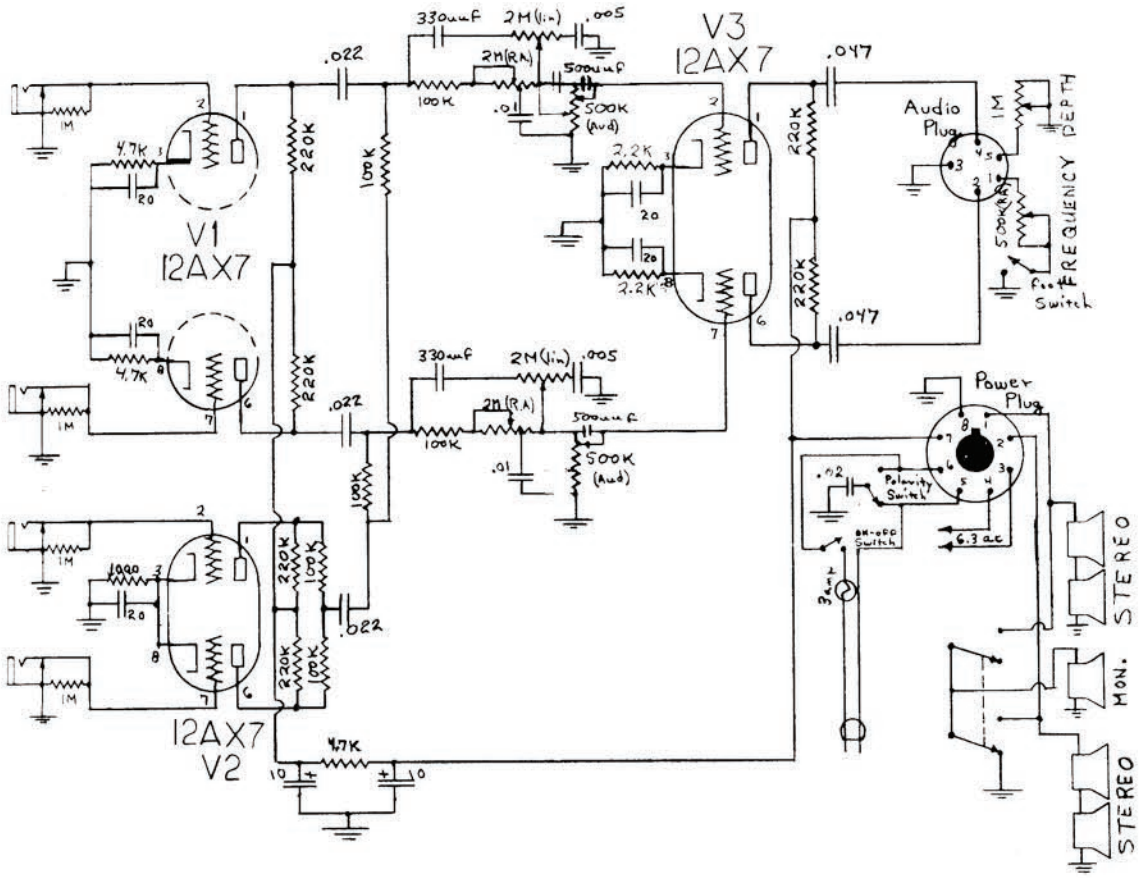

PREAMP OPERATING VOLTAGES*

Tube	Tube Type	Pin 1	Pin 2	Pin 3	Pin 6	Pin 7	Pin 8
V1	12AX7	157	0	1.8	157	0	1.8
V2	12AX7	117	0	1.05	117	0	1.05
V3	12AX7	105	0	1.05	105	0	1.05

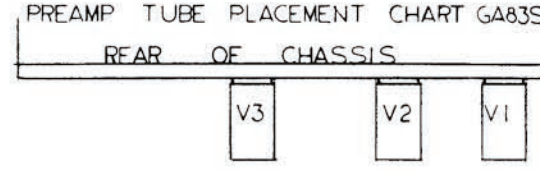

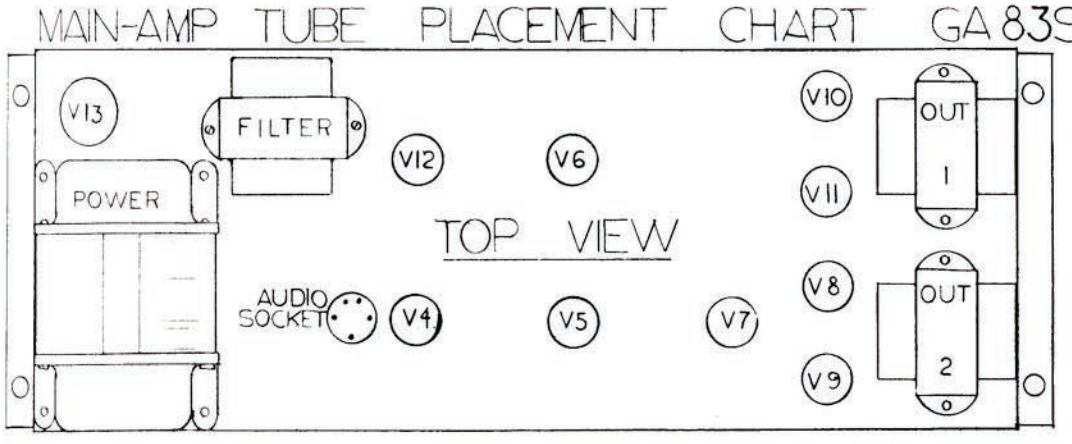

GIBSON GA-83S STEREO-VIB AMPLIFIER

The Gibson GA-83S Stereo-Vib amplifier is a true Stereo amplifier having two completely independent channels with respective 18 watt power amplifiers. Each amplifier channel can be used independently by using the Stereo input jacks or for monaural operation, using mónaural input jacks, the two amplifiers combine their output to a full 36 watts.

STEREO OPERATION

Place the rotary switch marked Stereo-Monaural in the Stereo position.

Gibson Stereo Guitars are furnished with a special two conductor shielded cable with a "Y" junction. Place the red plug from the "Y" connector in the red Stereo jack. Place the gray plug from the "Y" connector in the other Stereo jack. Place the special two conductor plug at the opposite end of the "Y" instrument cord in the instrument jack. This arrangement connects the bridge or treble pick-up to the two right side speakers and the fingerboard or bass pick-up to the two left side speakers.

Concentric controls on the amplifier control panel provide a convenient means for adjusting volume, bass and treble tone. The small upper knob of the three concentric controls provides adjustment for the red or treble circuits of the Stereo guitar. The lower knob of the three concentric controls provides adjustment for the bass pick-up circuit of the Stereo guitar.

Set all controls as desired. The volume from each channel should be adjusted until the sound appears equal to the player's ear. Switching the instrument toggle switch back and forth from treble to rhythm will aid in balancing the sound level. Tone control settings will affect the volume settings somewhat; therefore, the settings of the two volume controls will not necessarily be numerically identical.

FOR MONAURAL OPERATION

Place the rotary switch marked Stereo-Monaural, in the monaural position. This places the two channels in parallel and connects the center 12 inch speaker for 360 degree sound distribution. Plug in regular instrument in either monaural jack. A wide range of tonal colorings are available by adjusting the controls in both channels.

VIBRATO

The Gibson GA-83S Stereo and Vib amplifier has an unique vibrato with a 15 foot remote on - off foot control. This vibrato is effective on both channels and has both frequency and depth adjustment on the control panel. When used with a Stereo wired guitar you will be aware of an entirely new and pleasing dimension added to your musical sound.

POLARITY SWITCH

This added convenience enables the player to quickly find the polarity of the power source which reduces the A.C. hum and other extraneous noises to a minimum.

GENERAL

Amplifiers are carefully packed to prevent damage in shipment. However, upon receipt of the Amplifier, examine carefully to determine if there has been breakage of tubes or parts. If damage has occurred during shipment, the Transportation Company should be notified immediately, and a claim placed.

CAUTION

Damage to the Amplifier will result if it is connected to an improper power source. This Amplifier is designed to be operated on 105 - 125 volt, 50 - 60 cycle alternating current ONLY. Check the voltage from the power lines to determine that it is not over 125 volts, and that the frequency of the current is either 50 or 60 cycles.

TUBES

Check tubes for proper positioning before placing the Amplifier in operation. All tubes have been tested and proved satisfactory before shipment.

SERVICE

If the Amplifier is in need of servicing, consult a reliable radio man. The electrical diagram attached to the amplifier will assist the repair man in servicing.

FUSE

The fuse in the GA-83S Stereo-Vib amplifier is a type 3AG Slo-Blo of three ampere rating. DO NOT USE A FUSE OF HIGHER RATING.

GIBSON

MODEL GA-85 AMPLIFIER

INSTRUCTIONS

GIBSON INC., KALAMAZOO, MICH.

GA-85

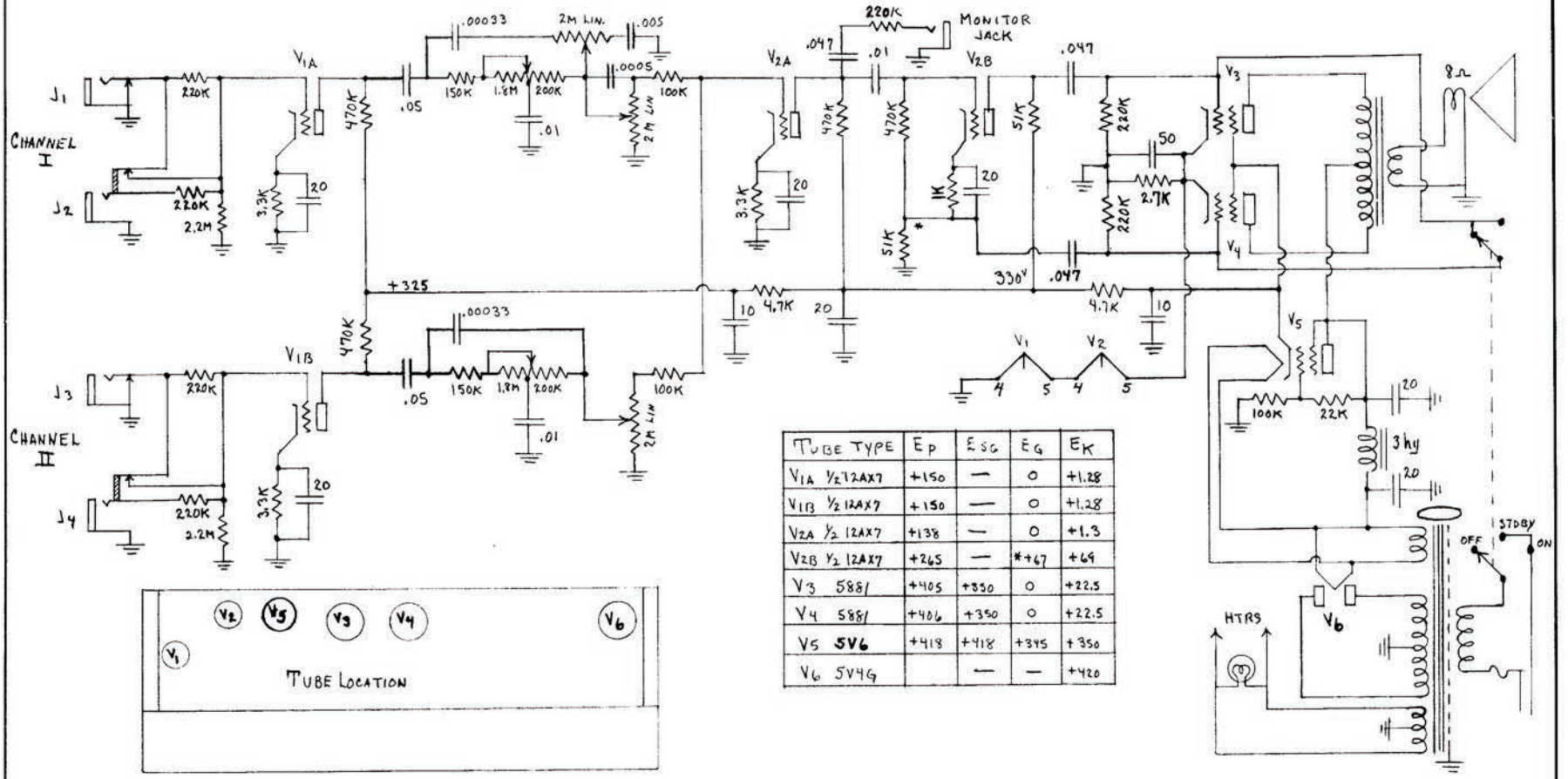

TUBE TYPE	Ep	Esg	EG	EK
V1A ½ 12AX7	+150	—	0	+1.28
V1B ½ 12AX7	+150	—	0	+1.28
V2A ½ 12AX7	+138	—	0	+1.3
V2B ½ 12AX7	+265	—	*+67	+69
V3 5881	+405	+330	0	+22.5
V4 5881	+406	+330	0	+22.5
V5 5V6	+418	+418	+345	+350
V6 5Y4G		—	—	+420

GIBSON AMPLIFIER — MODEL GA-85

Gibson's latest creation in amplifiers, the GA-85 is a masterpiece of beauty, design and performance. Engineered to give the performer a wide range of tone colors from clear bell-like trebles to deep resonant bass response.

Features powerful response, extra wide range of effects, monitor jack, extension speaker jack, and top mounted removable chassis that is detachable from amplifier case — case with speaker can be placed for best tone projection, while chassis with control panel can be placed near player for easy operation — eliminating tube rattles, hum, and other noises that frequently occur in regular amplifiers.

Read carefully the instructions on the care, use, features, and design of this outstanding unit to produce top performance and long-lasting service.

DESIGN

The GA-85 is designed to be played with chassis removed from case, and lid of case tightly closed with the snap fasteners — make sure that cord from speaker to chassis comes out of case through small hole cut out in center of bottom edge of lid. For practicing, amplifier may be used without removing chassis, but should be removed for regular playing. May also be played with chassis removed from case and with lid completely removed if desired.

FIDELITY

The GA-85 is a high gain, high fidelity amplifier with 25 watts output power with less than 3% distortion at a full 25 watts.

SPEAKER

Specially designed 12" Jensen P12P Speaker — perfectly matched to the powerful chassis and design of the GA-85 for maximum results and top performance.

TWO CHANNELS

Channel one with its own volume control and separate bass and treble voicing controls, together with channel two that has its own volume control and combination treble and bass control, permit a wide range of power and tone colorings and the use of a variety of units in numerous combinations. Suitable for Spanish Guitar, Rhythm, Jazz Guitar, Accordion, Steel Guitar, Mandolin, Microphone, and many other amplified instruments.

For all practical purposes there is no interaction between the two channels, so that entirely different settings of tone and volume controls can be used as desired; the surplus power of the amplifier insures ample volume level for each channel. Both channels have a wide range of volume and tone colorings.

CONTROL SETTING

The dynamic range of the amplifier and the power handling capabilities of the specially designed speaker and chassis is more than ample to faithfully reproduce all notes and their harmonics throughout the audio frequency range. The unusual clarity of tone and sound dispersement possibilities permits setting the volume at a relatively low level for general use — seldom is all the power required — when it is, the design of the amplifier permits 25 watts output with less than 3% distortion. Each channel has its own volume control. When only one input jack is used in each channel, the one at left in each channel produces more gain.

VOICING CONTROLS

Each channel has its own arrangement of Treble and Bass Voicing possibilities. Each channel, with the controls in the middle or upright position, will reproduce a medium voicing within its particular range. This can be varied to produce more Treble or more Bass within the range of each channel by setting the Voicing Controls to the desired tone quality.

Channel 1 — Suitable for all types of instruments and microphones. Equipped with separate Treble and Bass Voicing Controls. Start with both controls in middle or upright setting. Moving Bass Control counterclockwise reduces bass response — turning Bass Control clockwise adds bass response. Again, starting with controls in middle or upright position turning Treble Control counterclockwise reduces treble response — turning Treble Control clockwise adds treble response. Any variety of settings can be used.

Channel 2 — Suitable for all types of instruments and microphones. Equipped with combination Treble and Bass Voicing Control. Starting in upright or middle position turning Combination Control counterclockwise reduces bass response and emphasizes treble—moving Combination Control clockwise adds more bass emphasizing bass response.

MONITOR JACK

Crystal type headphones can be plugged into the Monitor Jack and, with the switch in the Standby Position, the player may practice without any sound produced from the loudspeaker; with the switch in the On Position, the player may monitor his playing with the amplifier set some distance away. For making recordings, it is sometimes desirable to plug the recorder into the monitor jack as this will eliminate disturbing room echoes and other extraneous noises. The Monitor Jack is operative when playing from either channel.

EXTENSION SPEAKER JACKS

Equipped with switching jacks for extension speakears. The extension speaker can be plugged into the jack in back of chassis which is farther away from the AC Line Cord, and both the regular speaker and the extension speaker will disperse the sound; or, the extension speaker can be plugged into the other jack closest to the AC Line Cord after removing the plug from the regular speaker and only the extension speaker will disperse the sound. Replace regular speaker plug into jack nearest the AC Line Cord when amplifier only is used.

STANDBY SWITCH

The 110 Volt power switch has three positions: OFF, STANDBY, and ON. In the Standby position, the tubes are lighted and heating, but the speaker is disconnected, eliminating any possible accidental sounds. Movement of the switch from Standby to ON gives instant response without waiting to warm up.

OPERATION OF THE MICROPHONE

Because of the high power output, high gain and high fidelity characteristics of the GIBSON GA-85 Amplifier, it makes an exceptionally fine public address system when used with either the crystal, dynamic or velocity types of microphones Either channel is suitable for microphone use. The jack at extreme left in each channel is recommended because of its added gain.

While the Amplifier will operate very well with any of the crystal, medium or high impedance dynamic or velocity (ribbon) microphones, it is recommended that a GIBSON Dealer be consulted before investing in a microphone. Authorized Gibson Dealers can supply a microphone which has been selected and matched to the amplifier, thus insuring the most faithful reproduction of voice and music.

When using a microphone it is important that a shielded plug be attached to the cord. The ordinary phone plug with bakelite or other non-shielded cover is not suitable because the leads from the microphone must be completely shielded. Otherwise objectional hum will result. Figure B illustrates the proper way to connect the plug to the microphone cable. To use the microphone, insert the plug in the MICROPHONE socket and advance the Microphone Volume Control until a feedback squeal or howl is produced by the loudspeakers. Reduce the Volume Control to just below the feedback point. This setting will vary considerably depending upon the size of the room, its acoustical properties and the distance between the microphone and the loudspeaker. Feedback is the limiting factor in all public address installations and is caused when the level of sound from the loudspeakers is sufficient to actuate the microphone. The general rule when setting up the equipment is to place the loudspeaker as far from the microphone as possible.



FIGURE B

GENERAL

Amplifiers are carefully packed to prevent damage in shipment. However, upon receipt of the Amplifier, examine carefully to determine if there has been breakage of tubes or parts. If damage has occured during shipment, the Transportation Company should be notified immediately, and a claim placed.

CAUTION

Damage to the Amplifier will result if it is connected to an improper power source. This amplifier is designed to be operated on 105 - 125 volt, 50 - 60 cycle alternating current ONLY. Check the voltage from the power lines to determine that it is not over 125 volts, and the frequency of the current is either 50 or 60 cycles.

When ready to use power, plug the power cord into the electric outlet and move the switch to the ON position. Approximately one minute is required for the tubes to heat before the Amplifier is ready to use.

TUBES

Check tubes for proper positioning before placing the Amplifier in operation. All tubes have been tested and proved satisfactory before shipment.

GROUND CLIP

The AC Line Cord is equipped with an external Ground Clip that can be attached to any grounded object such as a water pipe, steam radiator, or to a grounded circuit such as is used in recording and broadcasting studios. This reduces extraneous noises and hum — a feature very essential for top notch performance.

SERVICE

If the Amplifier is in need of servicing, consult a reliable radio man. The electrical diagram herein should be shown to the repairman to assist him in servicing the Amplifier.

FUSE

The fuse in the GA-85 Amplifier is a type 3 AG Slo-Blo of three amperes rating. DO NOT USE A FUSE OF HIGHER RATING.

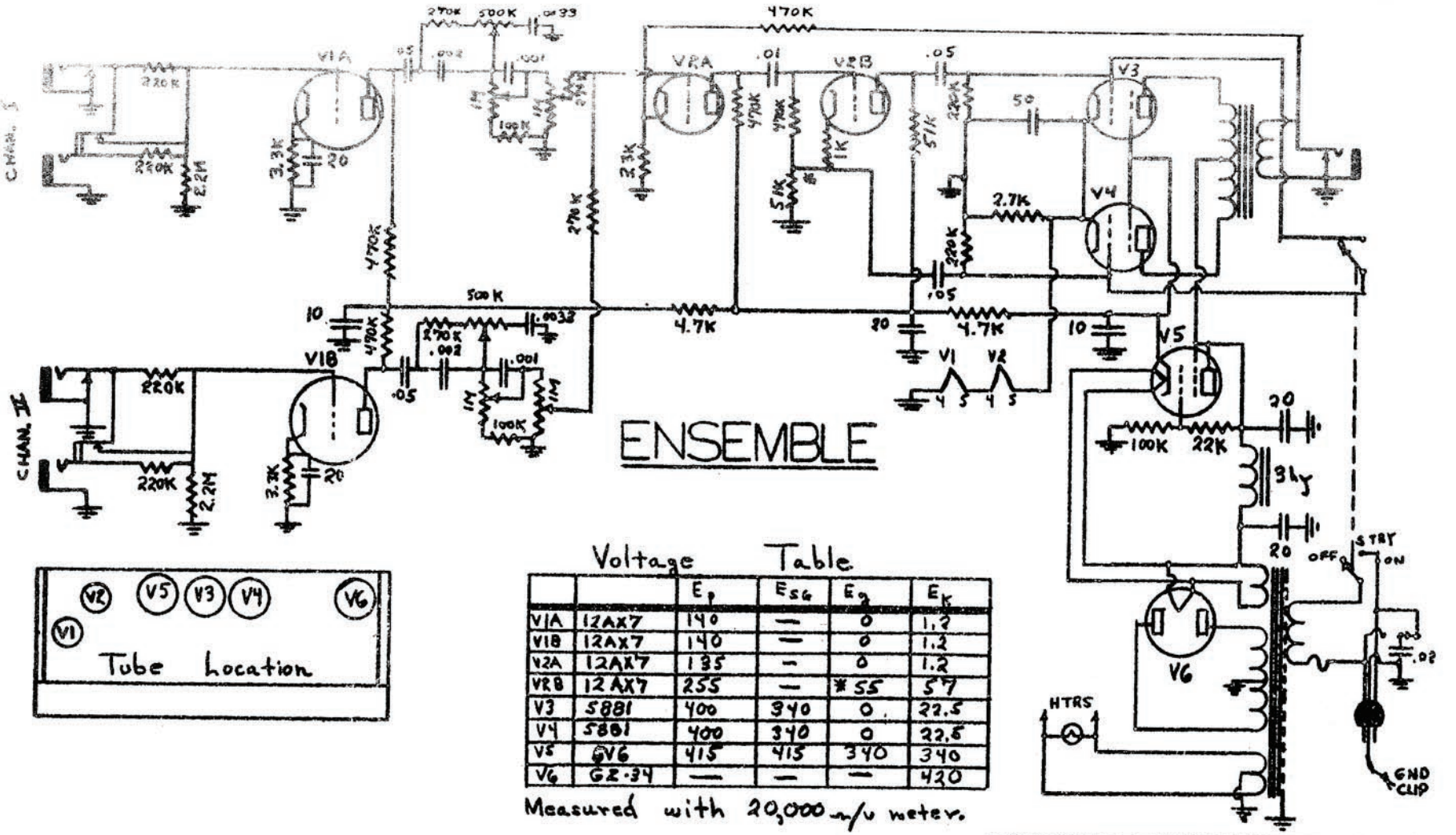

Voltage Table

		E_p	E_{sg}	E_g	E_k
V1A	12AX7	140	—	0	1.2
V1B	12AX7	140	—	0	1.2
V2A	12AX7	135	—	0	1.2
V2B	12AX7	255	—	*55	57
V3	5881	400	340	0	22.5
V4	5881	400	340	0	22.5
V5	GV6	415	415	340	340
V6	GZ-34	—	—	—	420

Measured with 20,000 ~/v meter.

GIBSON INC

Schematic Diagram

Drawn By: TKP | Cktd By:

Date: 6 May 60

GIBSON

STEREO-AMP.

INSTRUCTIONS

GIBSON INC., KALAMAZOO, MICHIGAN

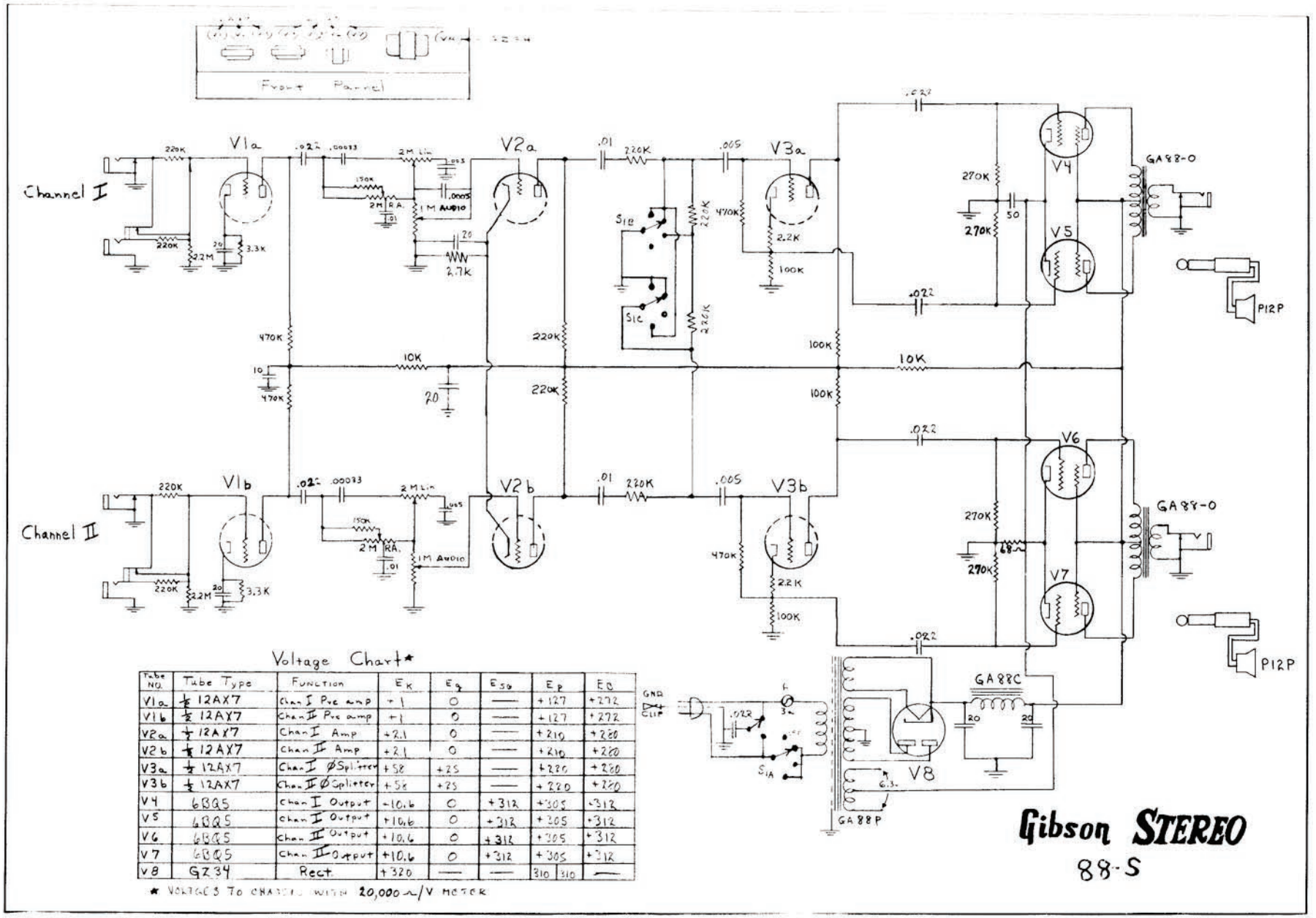

Voltage Chart★

Tube NO.	Tube Type	Function	E_K	E_{g_2}	E_{s_6}	E_P	E_0
V1a	½ 12AX7	Chan I Pre amp	+1	0	——	+127	+272
V1b	½ 12AX7	Chan II Pre amp	+1	0	——	+127	+272
V2a	½ 12AX7	Chan I Amp	+2.1	0	——	+210	+280
V2b	½ 12AX7	Chan II Amp	+2.1	0	——	+210	+280
V3a	½ 12AX7	Chan I ØSplitter	+58	+25	——	+220	+280
V3b	½ 12AX7	Chan II ØSplitter	+58	+25	——	+220	+280
V4	6BQ5	Chan I Output	+10.6	0	+312	+305	+312
V5	6BQ5	Chan I Output	+10.6	0	+312	+305	+312
V6	6BQ5	Chan II Output	+10.6	0	+312	+305	+312
V7	6BQ5	Chan II Output	+10.6	0	+312	+305	+312
V8	GZ34	Rect.	+320	——	——	310 | 310	——

★ VOLTAGES TO CHASSIS WITH 20,000 Ω/V METER

GIBSON STEREO-AMP. MODEL GA-88S

The Gibson "Stereo-Amp." is an amplifier with the newest electronic advances in true Stereo amplification and reproduction.

POWER OUTPUT

The Gibson Stereo-Amp. is a high fidelity amplifier capable of a normal output of 18 watts in each stereo channel, or 36 watts total.

OPERATING INSTRUCTIONS

To remove the inner speaker enclosure, push in the lower tab of the two case catches that are located along the side and near the top edge of the speaker grill. Place one hand near the center top of the outer enclosure, with the other hand gently lift the top edge of the inner enclosure and pull out of the larger enclosure.

Place the two speaker enclosures in their desired locations, try to keep as much separation as possible between speakers for best stereo effects. Remove the amplifier from the inner enclosure by turning the retaining brackets sideways and sliding the amplifier out. Place it near the playing position for convenience in changing control settings.

Uncoil the speaker cables from their respective holders and plug them into the speaker jacks located in the small well, located along the back and bottom edge of the metal amplifier cabinet. The A.C. line cord also enters the metal cabinet at this point.

FOR STEREO OPERATION

Place the function switch in stereo position. This switch also controls the off, on, standby function.

Gibson stereo guitars are furnished with a special two-conductor shielded cable with a "Y" junction. Place a plug from the "Y" connector in Channel 1, Jack 1; place the second plug from the "Y" connector in Channel 2, Jack 1; place the special two-conductor plug at opposite end of "Y" instrument cord in the instrument jack. Set all controls as desired. The volume from each speaker should be adjusted until the sound from each speaker appears equal to the player's ear. Tone control settings will affect the volume settings somewhat; therefore, the settings of Channel 1 and Channel 2 volume controls will not necessarily be numerically identical.

FOR MONAURAL OPERATION

Place the function switch in Monaural position. This places Channel 1 and Channel 2 output amplifiers in parallel. Plug in regular instrument with conventional manner and adjust only those controls that are associated with the channel in which the instrument is being used.

POLARITY SWITCH

This added convenience enables the player to quickly find the polarity of the power source which reduces the A.C. hum and other extraneous noises to a minimum.

ASSEMBLING CASE FOR CARRYING

Unplug speaker cables and coil up in their respective holders. Set amplifier in inner speaker enclosure, lock amplifier in place by moving retaining brackets to the front of the amplifier chassis. Coil up the A.C. line cord and place it in the receptacle at the right end of the case. Slide the inner enclosure into the outer enclosure. It will be necessary to lower the carrying handle of the inner enclosure. Line up the edges of the inner and outer cases and lock in position by pressing upper tab of the two case catches. The combined case can now be safely carried.

MICROPHONE OPERATION

The Gibson "Stereo-Amp." can be used as an excellent public address system. To use the microphone, place the function switch in the monaural position, insert the microphone plug in any of the four input jacks and advance the associated volume control until a feedback squeal or howl is produced by the loudspeaker. Reduce the volume control to just below the feedback point. This setting will vary considerably depending upon the size of the room, its acoustical properties and the distance between the microphone and the loudspeaker. Feedback is the limiting factor in all public address installations and is caused when the level of sound from the loudspeaker is sufficient to actuate the microphone. The general rule when setting up the equipment is to place the loudspeaker as far from the microphone as possible.

It is important that a shielded plug be attached to the microphone cable. The ordinary phone plug with bakelite or other non-shielded cover is not suitable because the leads from the microphone must be completely shielded. Objectional hum will result otherwise. Figure A illustrates the proper way to connect the plug to the microphone cable.



FIGURE A

GENERAL

Amplifiers are carefully packed to prevent damage in shipment. However, upon receipt of the Amplifier, examine carefully to determine if there has been breakage of tubes or parts. If damage has occurred during shipment, the Transportation Company should be notified immediately, and a claim placed.

CAUTION

Damage to the Amplifier will result if it is connected to an improper power source. This amplifier is designed to be operated on 105 - 125 volt, 50 - 60 cycle alternating current ONLY. Check the voltage from the power lines to determine that it is not over 125 volts, and the frequency of the current is either 50 or 60 cycles.

When ready to use power, plug the power cord into the electric outlet and move the switch to the Stereo or Monaural position. Approximately one minute is required for the tubes to heat before the Amplifier is ready to use.

TUBES

Check tubes for proper positioning before placing the Amplifier in operation. All tubes have been tested and proved satisfactory before shipment.

GROUND CLIP

The AC Line Cord is equipped with an external Ground Clip that can be attached to any grounded object such as a water pipe, steam radiator, or to a grounded circuit such as is used in recording and broadcasting studios. This reduces extraneous noises and hum — a feature very essential for top notch performance.

SERVICE

If the Amplifier is in need of servicing, consult a reliable radio man. The electrical diagram attached to the amplifier will assist the repair man in servicing.

FUSE

The fuse in the GA-88S GIBSON-STEREO Amplifier is a type 3AG Slo-Blo of three ampere rating. DO NOT USE A FUSE OF HIGHER RATING.

GIBSON

MODEL GA-90 AMPLIFIER

INSTRUCTIONS

GIBSON INC., KALAMAZOO, MICHIGAN

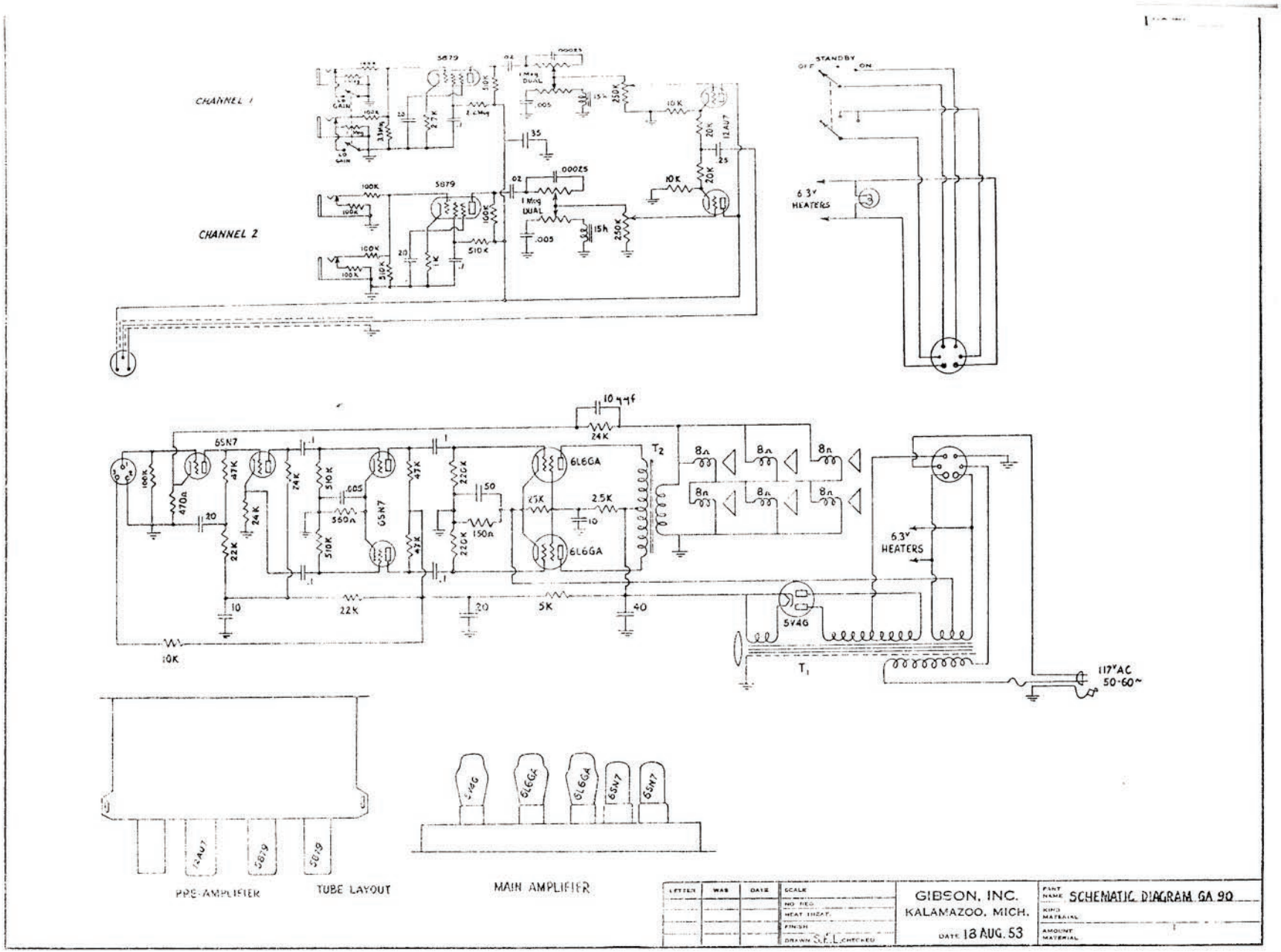
CHANNEL 1
CHANNEL 2
5879
12AU7
STANDBY
OFF
ON
6.3V HEATERS
6SN7
6L6GA
5V4G
T2
T1
117VAC 50-60~
PRE-AMPLIFIER
TUBE LAYOUT
MAIN AMPLIFIER
GIBSON, INC.
KALAMAZOO, MICH.
DATE 18 AUG. 53
SCHEMATIC DIAGRAM GA 90

GIBSON AMPLIFIER - MODEL GA-90

FIDELITY

The GA-90 is a HIGH FIDELITY amplifier with a normal output of twenty-five watts, and a peak out-put in excess of thirty-five watts.

A greatly enlarged angle of sound distribution is obtained from the 6 eight inch MATCHED GIBSON ULTRA-SONIC speakers which reproduce the extremely high level of audio power free of distortion.

THE FREQUENCY RESPONSE of this amplifier is plus or minus 1 D.B. from 20 cycles to 20,000 cycles with a distortion measurement of less than 2 percent. Due to the advanced design of the two chassis the hum is reduced to an almost inaudible level.

PRE-AMPLIFIER

The amplifier is designed and constructed in two units. The preamplifier with the controls is mounted in the top of the case, while the main amplifier and power supply is mounted in the bottom of the case. This construction not only brings the controls at a position of maximum convenience for you, but also permits a more even distribution of weight, for ease of carrying.

TWO CHANNELS

The pre-amlifier is divided into two separate channels with two input jacks in each channel. Each channel having an independent volume and voicing control. Channel ONE is provided with a GAIN switch to allow the use of either two microphones or two instruments. Channel TWO provides two jacks for use with instruments.

Complete isolation is provided between the two channels so that entirely different settings of the voicing and volume controls can be used without inter action between the channels.

This permits two entirely different styles of instruments, such as an accordion or electric bass and steel guitar to be played simultaneously with the controls set for the type of response best suited for each instrument.

CONTROL SETTING

The dynamic range of the amplifier and the power handling capabilities of the six speakers is more than ample to faithfully reproduce all notes and their harmonics throughout the audio frequency range.

Due to the wide dispersement of sound from this amplifier it is possible to set the volume at a lower level than with single or double speaker amplifiers. This reduces extraneous vibrations that are induced in surrounding objects at low frequencies and high power levels.

VOICING CONTROLS

The VOICING CONTROLS are very effective, and for best results they should be set to the correct register for the range of the instrument being played.

RECOMMENDED SETTINGS

Instrument	Voice Control Setting
Electric Bass	Extreme Bass Voicing
Spanish Guitar	Normal voicing
Hawaiian Guitar	Normal to Treble
Electric Mandolin	Treble
Accordion with Pick up	Normal to Bass

STANDBY SWITCH

The three position power switch turns the 110 Volt current on or off. In the "STANDBY" position the pilot light and tubes are lighted and heating, but the speaker is disconnected, eliminating any possible accidental sounds. A flick of the switch from standby to ON gives you instant response, no waiting to warm up.

CONTROL DIAGRAM

Diagram A below gives a complete explanation of the controls and channels.

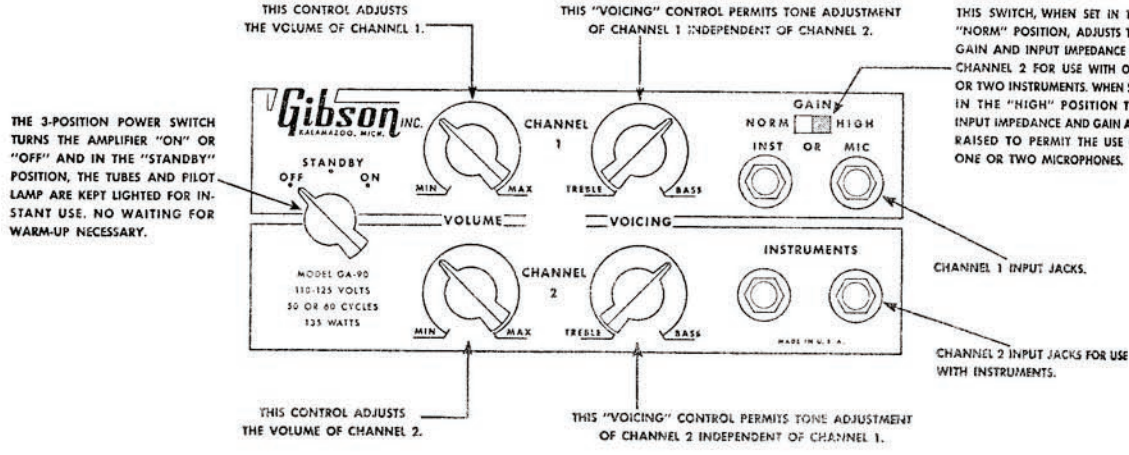

OPERATION OF THE MICROPHONE

Because of the high power output, high gain and high fidelity characteristics of the GIBSON GA-90 Amplifier it makes an exceptionally fine public address system when used with either the crystal, dynamic or velocity types of microphones.

While the amplifier will operate very well with any of the crystal, medium or high impedance dyamic or velocity (ribbon) microphones, it is recommended that, before investing in a microphone, you consult your GIBSON dealer. Authorized. GIBSON dealers can supply you with a microphone which has been selected and matched to the amplifier, thus insuring the most faithful reproduction of voice and music.

When using a microphone it is important that the GIBSON 75A or similar shielded plug be attached to the cord. The ordinary phone plug with bakelite or other non-shielded cover is not suitable because the leads from the microphone must be completely shielded. Otherwise objectionable hum will result. Figure B illustrates the proper way to connect the plug to the microphone cable. To use the microphone, move the switch marked GAIN to the high position, insert the plug in the MICROPHONE socket and advance the CHANNEL I volume control until a feedback squeal or howl is produced by the loudspeakers. Reduce the volume control to just below the feedback point. This setting will vary considerably depending upon the size of the room, its acoustical properties and the distance between the microphone and loudspeaker. Feedback is the limiting factor in all public address installations and is caused when the level of sound from the loudspeakers is sufficient to actuate the microphone. The general rule when setting up the equipment is to place the loudspeaker as far from the microphone as possible.

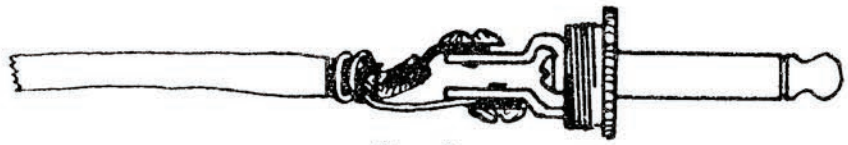

Figure B

GENERAL

Amplifiers are carefully packed to prevent damage in shipment. However upon receipt of the amplifier, look it over carefully to make sure there has been no breakage of tubes or parts. If you find that damage has occured during shipment, we suggest the Transportation Company be called immediately.

CAUTION

Damage to the amplifier will result if it is connected to an improper power source. This amplifier is designed to be operated on 105-125 volt, 50-60 cycle **alternating current only.** Make sure the voltage from the power lines is not over 125, and that the frequency of the current is either 50 or 60 cycles. When ready to turn on the power, plug the power cord into the electric outlet and turn on the switch. Wait approximately one minute for the tubes to heat, and the amplifier is ready for use.

TUBES

Be sure tubes are in their proper positions before placing the amplifier in operation. All tubes have been tested and proved satisfactory before shipment.

GROUND CLIP

The AC line cord is equipped with an external Ground Clip that can be attached to any grounded object such as a water pipe, steam radiator, or to a grounded circuit such as used in recording and broadcasting studios. This reduces extraneous noises and hum — a feature very essential for top notch performance.

SERVICE

If the amplifier is in need of servicing, we suggest it be taken to a reliable radio man. The electrical diagram attached should be shown the repairman to assist him in servicing the amplifier.

* * *

The fuse in the GA-90 Amplifier is a type AG of three ampere rating. DO NOT USE FUSES OF HIGHER RATING.

GA-95 "APOLLO"

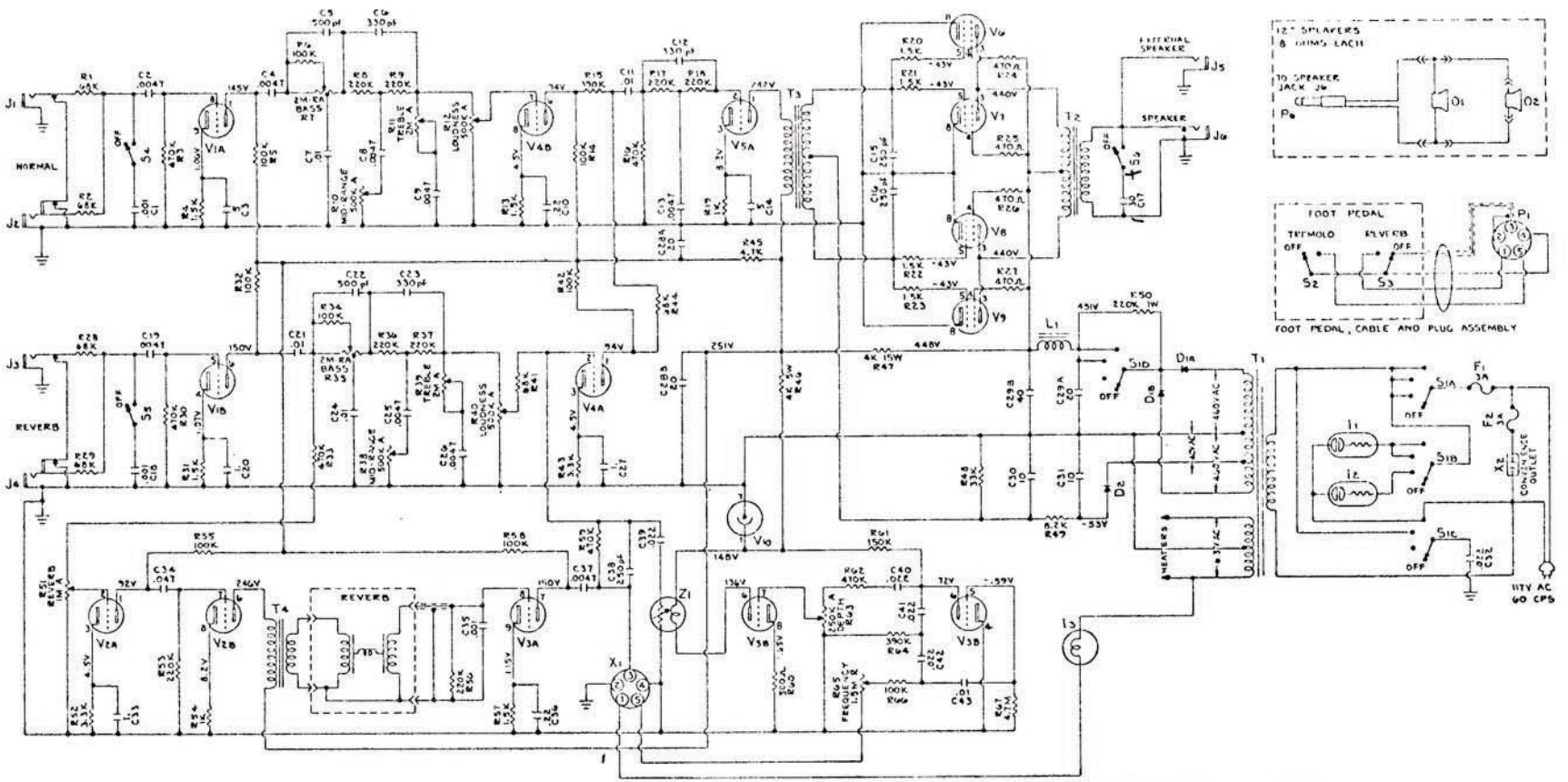

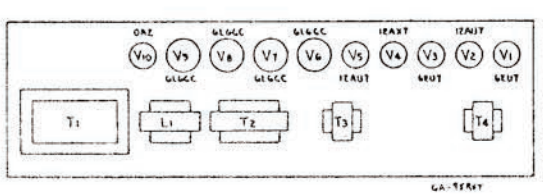

T1	Power Transformer	TF-103P	D1A,D1B	Diode - 1200 PIV	DI-57
T2	Output Transformer	TF-503-0	D2	Diode - 200 PIV	DI-405
T3	PP Driver Transformer	TF-1001B	J1	Foot Pedal Socket	CN-78FC0-5
T4	Reverb Transformer	TF-E6400	X2	Convenience Outlet	CN-303
L1	Filter Choke	TF-1002C	R39	Control - 2 meg audio w/switch	CBA-4005-1
S1A,B,C,D	Switch	SW-78A-1	R10,R12,R38,R40	Control - 500K audio	CBA-4007
S2	Switch SPST	SW-82h03	R43	Control - 250K audio	CBA-4008
S3	Switch SPDT	SW-82h22	R11	Control - 2 meg, audio	CBA-811-3702-1
S4,S5	Switches DPDT Slide	SW-129	R51	Control - 1 meg, audio	CBA-811-3709-1
I1	Pilot Light (Red)	PL-37R	R65	Control - 1.5 meg, RA	CBA-811-3711-1
I2	Pilot Light (Amber)	PL-38A	R7,R35	Control - 2 meg, RA	CBA-913-222-1
I3	Pilot Light (Red) w/clip	PL-34R	O1,O2	Speakers - 12" 8 ohms each	3-20011

GIBSON

"BASS AMP"
MODEL GA-100 AMPLIFIER
FOR BASS AND CLASSIC GUITAR

INSTRUCTIONS

GIBSON INC., KALAMAZOO, MICH.

GA-100

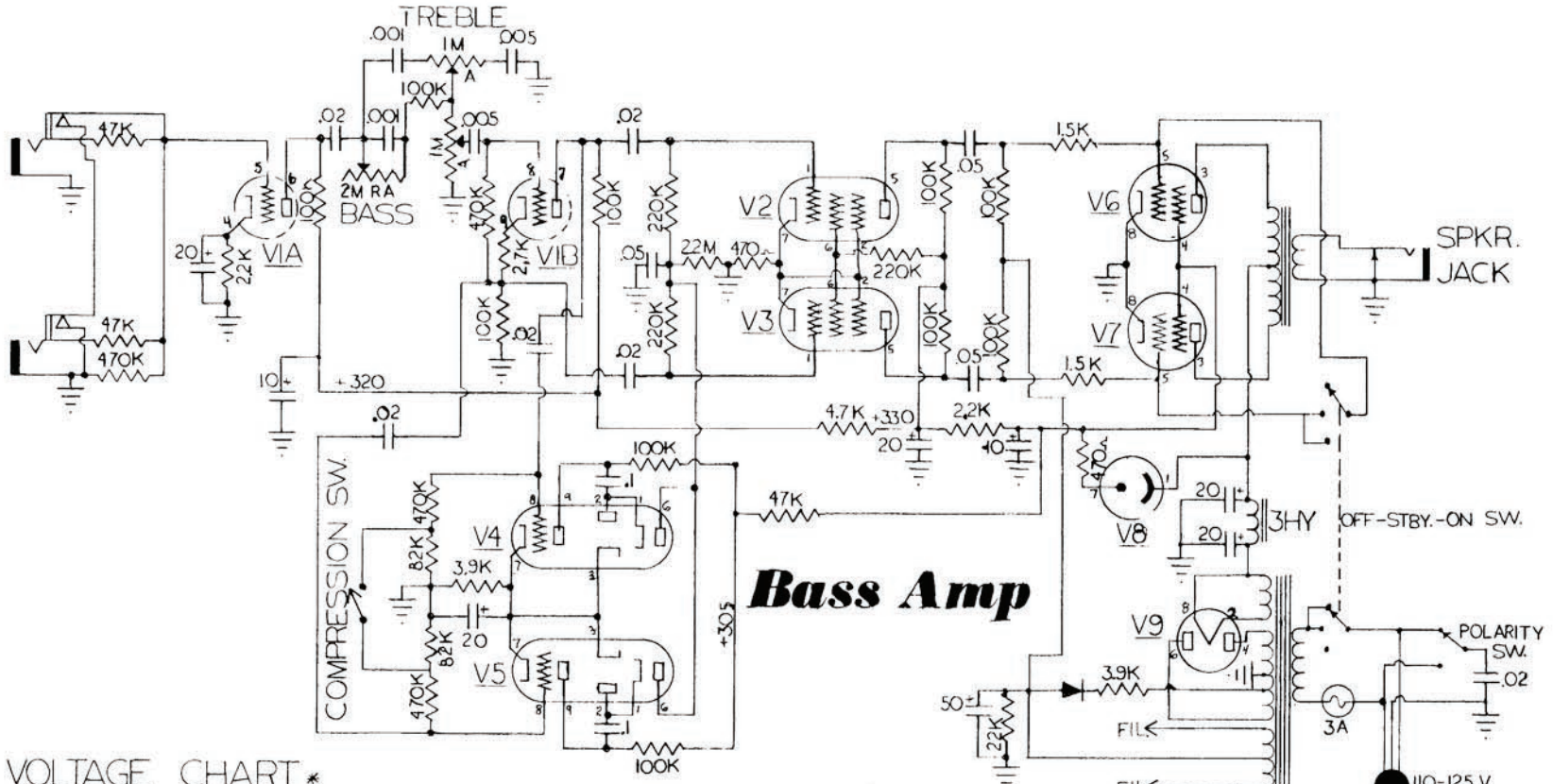

VOLTAGE CHART *

NR.	TYPE	PIN 1	PIN 2	PIN 3	PIN 4	PIN 5	PIN 6	PIN 7	PIN 8	PIN 9
V 1	6EU7	FIL	FIL	—	1.9	0	235	255	39	76
V 2	6BD6	0	2.7	FIL	FIL	120	45	2,7	—	—
V 3	6BD6	0	2.7	FIL	FIL	120	45	2.7	—	—
V 4	6FM8	1.6	1.6	3.8	FIL	FIL	0	3.8	0	260
V 5	6FM8	1.6	1.6	3.8	FIL	FIL	0	3.8	0	260
V 6	6LG GC	GND	FIL	423	345	-38	—	FIL	GND	—
V 7	6L6 GC	GND	FIL	423	345	-38	—	FIL	GND	—
V 8	OC2	425	—	—	—	—	—	350	—	—
V 9	GZ 34	GND	FIL	—	350 ~	—	350 ~	—	430	—

*ALL DC VOLTAGES MEASURED TO CHASSIS WITH V.T.V.M.

TUBE PLACEMENT CHART

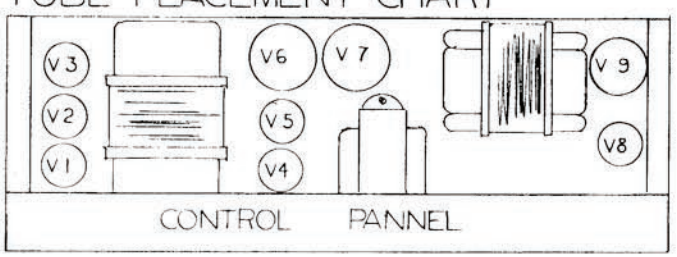

GIBSON BASS AMP — MODEL GA-100

The GIBSON "BASS AMP" is specially engineered and designed for use with the ELECTRONIC BASS and CLASSIC GUITAR. A built-in compression circuit prevents the overloading of the speaker by the low frequencies of the ELECTRONIC BASS. It features a clear powerful undistorted performance, sturdy, compact, portable construction and rich attractive appearance. The use of a specially designed speaker, premium tubes, deluxe transformers and other top quality components, insure great reserve power and trouble free service.

HI-FIDELITY

The GA-100 amplifier is a high fidelity amplifier, rated at 30 watts output, and capable of 45 watts of peak power. The frequency response is within plus or minus 1½ DB from 50 to 15,000 cycles.

WIDE RANGE SPEAKER

The GA-100 amplifier is equipped with a twin cone speaker, developed by a famous research laboratory to reproduce realistically the low frequencies of the ELECTRONIC BASS and the medium frequencies of the CLASSIC GUITAR, for which this amplifier was designed.

COMPRESSION SWITCH

The compression circuit of the GA-100 amplifier is a built-in safety device which automatically controls the output of the amplifier and reduces the possibilities of distortion and speaker overload.

REMOVABLE AMPLIFIER

The removable feature of the GA-100 amplifier is a great help in reducing distortion caused by vibration of microphones, due to closeness of the speaker. The amplifier may be placed any distance, up to 20 feet, from the speaker cabinet. A receptacle is provided for an adjustable tripod stand, which can be purchased through any GIBSON dealer.

CONTROL SETTINGS

The following suggested settings are noted for average use, and deviation from these can be made at the player's discretion.

	VOLUME	*BASE*	*TREBLE*
ELECTRONIC BASS	Minimum Necessary	0	0
CLASSIC GUITAR	Minimum Necessary	3-5	3-5

The dynamic range of the amplifier and the power handling capabilities of the special designed speaker is more than ample to faithfully reproduce all the notes and their harmonics throughout the audio frequency range.

POLARITY SWITCH

This added convenience enables the player to quickly find the polarity of the power source which reduces 60 cycle hum and other extraneous noises to a minimum.

STANDBY SWITCH

The 110 Volt power switch has three positions: OFF, STANDBY, and ON. In the Standby position, the tubes are lighted and heating, but the speaker is disconnected, eliminating any possible accidental sounds. Moving the switch from Standby to ON gives instant response without waiting to warm up.

OPERATION OF THE MICROPHONE

Because of the high power output, high gain and high fidelity characteristics of the GIBSON GA-100 Amplifier it makes an exceptionally fine public address system when used with either the crystal, dynamic or velocity type microphones.

While the Amplifier will operate very well with any of the crystal, medium or high impedance dynamic or velocity (ribbon) microphones, it is recommended that a GIBSON Dealer be consulted before investing in a microphone. Authorized Gibson Dealers can supply a microphone which has been selected and matched to the amplifier, thus insuring the most faithful reproduction of voice and music.

When using a microphone it is important that a shielded plug be attached to the cord. The ordinary phone plug with bakelite or other non-shielded cover is not suitable because the leads from the microphone must be properly shielded. Otherwise objectionad hum will result. Figure B illustrates the proper way to connect the plug to the microphone cable. To use the microphone, insert the plug in the instrument jack and advance the Volume Control until a feedback squeal or howl is produced by the loudspeaker. Reduce the Volume Control to just below the feedback point. This setting will vary considerably depending upon the size of room, its acoustical properties and the distance between the microphone and the loudspeaker. Feedback is a common factor in all public address installations and is caused when the level of sound from the loudspeaker is sufficient to actuate the microphone. The general rule when setting up the equipment is to place the loudspeaker as far from the microphone as possible.



FIGURE B

GENERAL

Amplifiers are carefully packed to prevent damage in shipment. However, upon receipt of the Amplifier, examine carefully to determine if there has been breakage of tubes or parts. If damage has occured during shipment, the Transportation Company should be notified immediately, and a claim placed.

CAUTION

Damage to the Amplifier will result if it is connected to an improper power source. This amplifier is designed to be operated on 105 - 125 volt, 50 - 60 cycle alternating current ONLY. Check the voltage from the power lines to determine that it is not over 125 volts, and the frequency of the current is either 50 or 60 cycles.

When ready to use power, plug the power cord into the electric outlet and move the switch to the ON position. Approximately one minute is required for the tubes to heat before the Amplifier is ready to use.

TUBES

Check tubes for proper positioning before placing the Amplifier in operation. All tubes have been tested and proved satisfactory before shipment.

GROUND CLIP

The AC Line Cord is equipped with an external Ground Clip that can be attached to any grounded object such as a water pipe, steam radiator, or to a grounded circuit such as is used in recording and broadcasting studios. This reduces extraneous noises and hum — a feature very essential for top notch performance.

SERVICE

If the Amplifier is in need of servicing, consult a reliable radio man. The electrical diagram herein should be shown to the repairman to assist him in servicing the Amplifier.

FUSE

The fuse in the GA-100 Amplifier is a type 3 AG, two ampere rating. DO NOT USE A FUSE OF HIGHER RATING.

GA-200

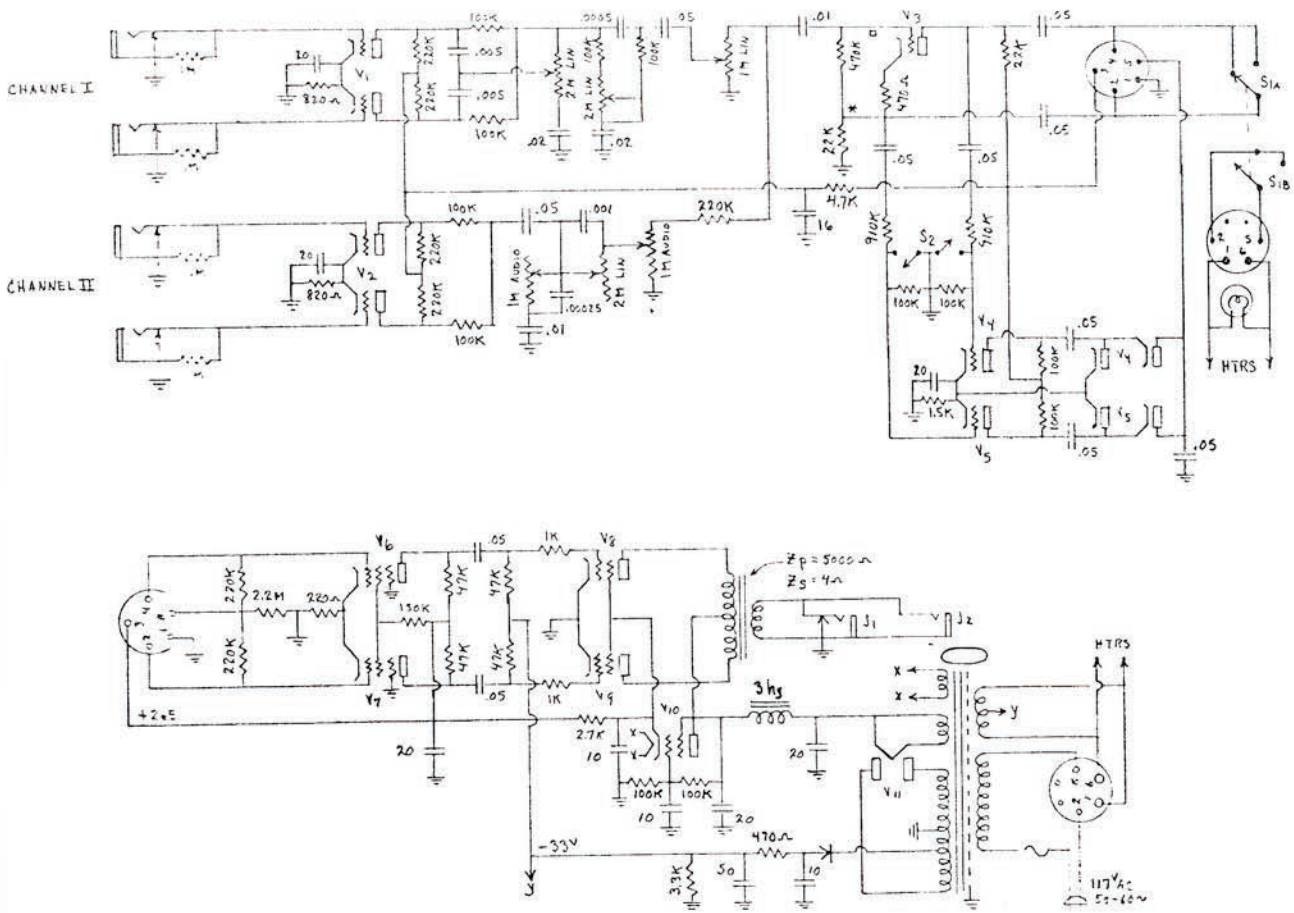

Tube Type use	E_P	E_{SG}	E_G	E_K
V1 12AX7 CHAN I PREAMP	+135	—	0	+1.15
V2 " " II " "	+120	—	0	+1.1
V3 12AY7 PHASE SPLITTER	+210	—	+62 # +42 □	+64
V4 6BJ8 COMP AMP + RECT	+110	—	0	+4.9
V5 " " " "	+110	—	0	+4.9
V6 6SK7 DRIVER + COMP	+145	+42	-.1	+1.5
V7 " " "	+145	+42	-.1	+1.5
V8 6550 PWR AMP	+570	+300	-33	0
V9 " " "	+570	+300	-33	0
V10 6V6 VOLTAGE REG	+570	+570	+285	+300
V11 GZ34 RECTIFIER	470 RMS	—	—	+580

ALL DC READINGS WITH 11 MEG VTVM MEASURED TO CHASSIS

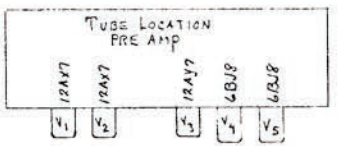

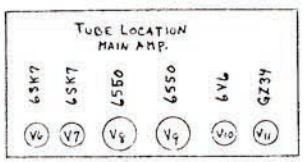

Gibson

Crestline Amplifier

MODEL GA-300RVT AMPLIFIER

INSTRUCTIONS

PRODUCT OF

Gibson Electronics

KALAMAZOO, MICHIGAN

REVERB UNIT UNPACKING INSTRUCTIONS

IMPORTANT — READ CAREFULLY BEFORE USE

CAUTION

The Reverb Unit has been carefully constructed. It is, however, a delicate electronic device. Treat it with the same care and respect given a TV set.

Avoid dropping, sudden jolts, or rough handling and it will give excellent service. This beautifully musical Reverberation effect is not to be confused with the repeating signal produced by the mechanical tape recorder style of echo units.

UNPACKING

Amplifiers are carefully packed to prevent damage in shipment. However, upon receipt of the amplifier, examine carefully to determine if there has been breakage of tubes or parts. If damage has occurred during shipment, call the Transportation Company immediately, and place a claim.

CAUTION

Damage to the amplifier will result if it is connected to an improper power source. This amplifier is designed to be operated on 105-125 volt, 50-60 cycle alternating current only. The voltage from the power lines should not exceed 125, and the frequency of the current should be either 50 or 60 cycles. When ready to use power, insert the plug on the power cord into the electric outlet and move switch to "on." After approximately one minute for the tubes to heat, the amplifier is ready for use.

The Reverberation Unit must always be placed on a solid non-vibrating surface or footing when in operation.

Any sudden shock, jolt, or wiggle, when in use, will cause undesirable noise. The resultant clatter of an inadvertant shake or bump is annoying but not necessarily harmful. This delicate sensitivity to shock and vibration is a normal characteristic of the device.

No problem will be encountered while the unit is connected if supporting surface is solid and unit is not moved about. To avoid the unwanted noise, turn the reverberation unit off by pressing the foot switch.

SET UP INSTRUCTIONS

1. REMOVING "Tuck-a-way" CHASSIS FROM TONE CHAMBER CASE

To remove the amplifier chassis it is necessary to open the upper back panel of the Tone Chamber. To open this panel, push up on the RIGHT hand side of each latch located inside the cut out. See Figure 1. The back panel will now swing downward revealing the "Tuck-a-way" chassis.

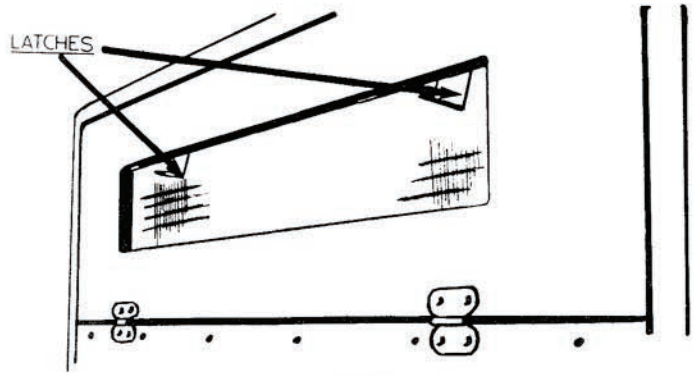

FIGURE 1.

Before removing the "Tuck-a-way" chassis notice how the Foot Pedal, Speaker Cord and the A.C. Power Cord are stored. They should be returned to these locations when the chassis is returned to its "Tuck-a-way" position. See Figure 2.

CAUTION: Do not allow the Speaker Cord to fall into the Tone Chamber.

Handles have been provided at each end of the "Tuck-a-way" chassis for easy removal from the Tone Chamber compartment. See Figure 2. The Foot Pedal and the Speaker Cord should also be taken out at this time. The upper back panel should be closed and latched before the unit is played. Push up on the LEFT hand side of each latch to lock. Pushing in on the top of the back panel while latching may be necessary.

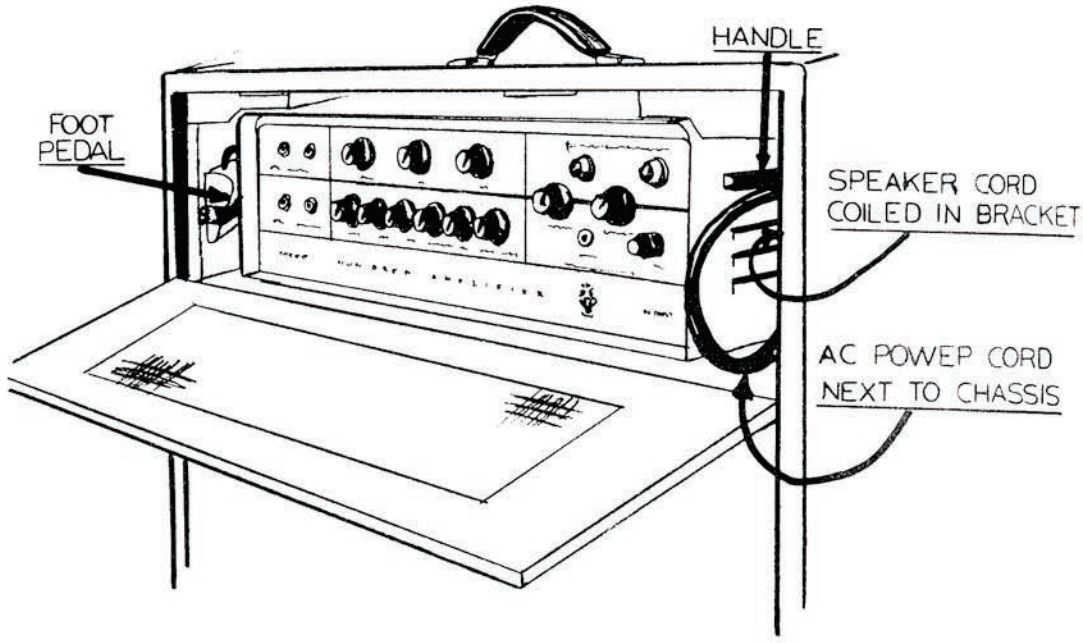

FIGURE 2.

2. FOOT PEDAL AND SPEAKER CORD CONNECTIONS

The Speaker Cord and the Foot Pedal cable must be plugged into the rear of the amplifier chassis. See Figure 3. The plug on the Foot Pedal is "Polarized" and may be inserted in only one way.

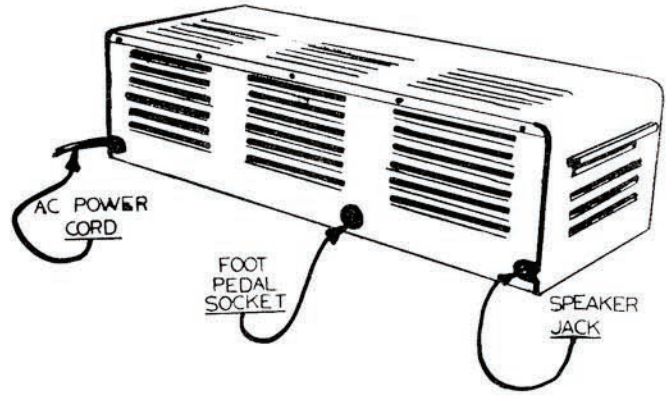

FIGURE 3.

The amplifier is ready for operation when its A.C. Power Cord is plugged into the proper power source. The amplifier chassis SHOULD NOT be set on top of the Tone Chamber as vibrations may produce undesirable effects.

Before returning amplifier chassis to its "Tuck-a-way" position, unplug the Foot Pedal and the Speaker Cord.

CONTROL LOCATIONS

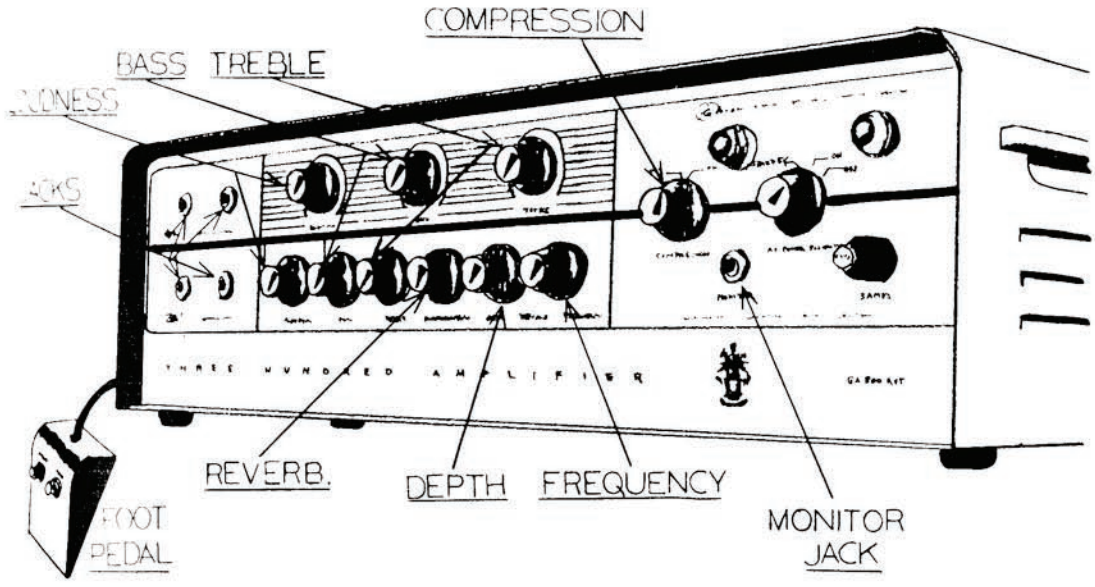

FIGURE 4.

A.C. POWER-POLARITY SWITCH

A convenient switch has been provided for performing a total of three functions, turning the amplifier on and off, putting the amplifier in "Standby" and selecting the proper polarity of the power source which reduces the A.C. hum and other extraneous noises to a minimum. In the "Standby" position the amplifier is kept "warmed up" and ready to play at the instant the switch is advanced to the "On" positions. Two "On" positions have been provided. The hum and hiss level on one of the "On" positions will be noticeably lower — this is the correct "Polarity" for using the amplifier.

In locations of extremely high noise levels, clipping the "Ground Clip" to a grounded object will greatly reduce objectionable noise and hum.

As an added convenience to the artist this amplifier is equipped with a "Standby pilot light" as well as the "Regular pilot light" When the "Green" light is on the amplifier is in "Standby"; when the "Red" light is on the amplifier is "On" and ready to play.

COMPRESSION SWITCH

This amplifier is equipped with "photon power control" which assures use of total power 100% of the time with a minimum of distortion. The Compression feature affects both channels and should be used when high power settings are used. The Compression feature — a Gibson exclusive — reduces the possibility of distortion and overloading of the speakers.

NOTE: WHEN PLAYING ELECTRIC BASS INTO THIS AMPLIFIER THE COMPRESSION SWITCH MUST BE IN THE "ON" POSITION.

TREMOLO — EFFECTIVE IN CHANNEL 2 ONLY

The Tremolo effect adds another dimension to the Reverberation effect. It can be used either with or without reverberation at the players discretion. The Tremolo is turned on or off by the use of the foot switch. The Tremolo Frequency Range has been carefully set to cover a wide range of Tremolo effects. The Depth of the Tremolo is also variable being controlled by the Depth control.

OPERATION OF MICROPHONE

The high gain and high fidelity characteristics of this Amplifier, permit the use of most of the popular high impedance microphones for public address work. The microphone should be plugged into the Number One Jack of Channel 1.

If the Microphone jacks are not in use, turn the Channel one Loudness control completely off.

TILT FOOT

The Tone Chamber has a "Tilt Foot" installed on the bottom to allow the artist to change the angle of sound dispersion. See Figure 5.

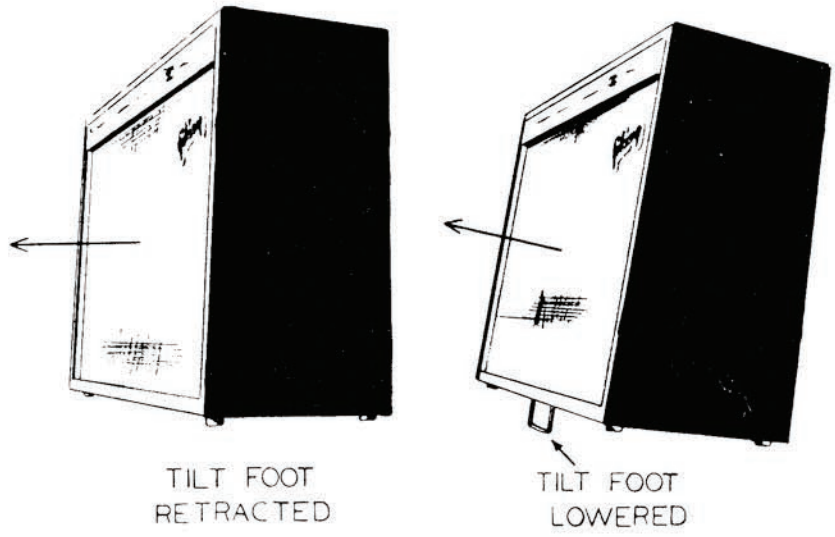

FIGURE 5.

CHANNEL TO USE

Players may wish to produce a specific tone or style by using a channel and setting to reproduce the "effect" desired, although the channel is normally used for another purpose. General suggested uses of the various channels:-

Channel 1. - For low frequency response with distortion-free power-Electric Bass, Accordian, Guitar and other amplified instruments where deep, low frequency response is required.

Channel 2. - For mid-range frequency response and rhythm — Spanish Guitar, Steel Guitar, Accordion. This channel is also excellent for lead instruments when a definitive response is required. The Tremolo and Reverberation effects are available only in this channel.

MODEL GA-300 RVT AMPLIFIER

REVERBERATION — EFFECTIVE IN CHANNEL 2 ONLY

Due to the unusual flexibility of the Reverberation circuit, it is important that the Operator understands the various control settings to obtain the total range of Reverberation effects of which this Amplifier is capable. Illustrated below are several examples of control settings which will reproduce different Reverberation effects.

Loudness 2 Bass Treble Reverberation Depth Frequency

Example No. 1. 50% Main Signal - 50% Reverb.

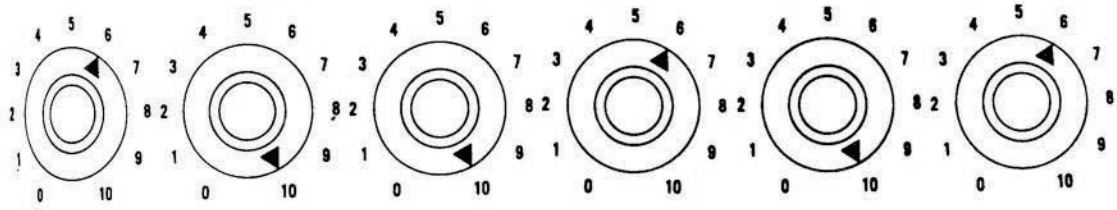

INSTRUMENT SETTINGS — Tone control and/or toggle switch in maximum treble position. Volume control setting 7.

Example No. 2. 75% Main Signal - 25% Reverb.

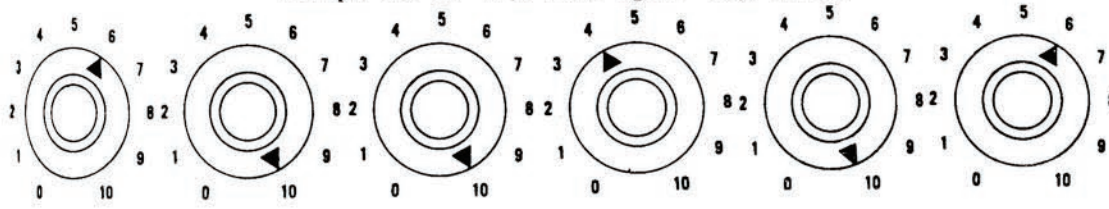

INSTRUMENT SETTINGS — Same as above,

Example No. 3. 25% Main Signal - 75% Reverb.

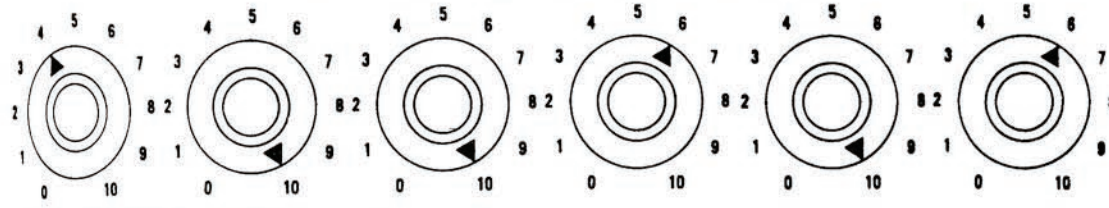

INSTRUMENT SETTINGS — Same as Example No. 1.

Example No. 4. 100% Reverb.

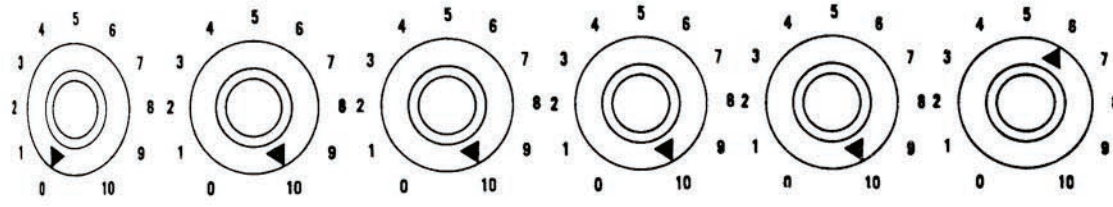

INSTRUMENT SETTINGS — Same as Example No. 1.

FOOT SWITCH MUST BE IN THE "ON" POSITION FOR REVERBERATION.

OPERATIONAL INSTRUCTIONS FOR USE OF THIS REVERBERATION AMPLIFIER IN CONJUNCTION WITH A REGULAR AMPLIFIER

The use of this Reverberation Amplifier with a Regular Amplifier will add a spacious liveliness to instrument reproduction that is far beyond the possibilities of single amplifier Reverberation. Listed below are the simple instructions for this type of operation.

1. Plug the A.C. cord of this Reverberation Amplifier into a convenient outlet.
2. Now plug one end of a shielded jumper cord into the No. 1 Jack of Channel 2 (the one with the Red Washer) Plug the other end of the jumper cord into the input jack normally used in a regular amplifier. Set regular amplifier for normal volume.
3. The Guitar instrument cord should be plugged into the No. 2 Jack of Channel 2 of this Reverberation Amplifier. Plug the A.C. line cord of the Regular Amplifier into a convenient outlet.
4. Turn on the A.C. switches for both amplifiers and the tone controls may be set as illustrated on page 2.
5. If both Reverb. and Normal Signals are to be heard at the regular Amplifier, plug the Shielded Jumper Cord into the Monitor Jack of this Reverberation Amplifier instead of the Jack with the Red Washer.

Illustrated below is a pictorial diagram showing the correct hook-up

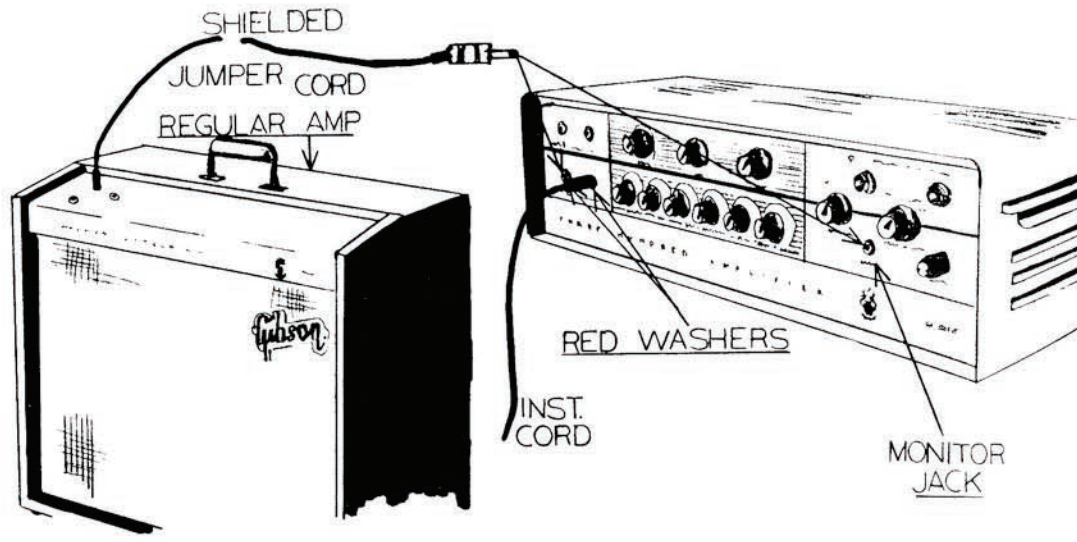

FIGURE 6.

6. Place the combination reverberation, tremolo foot control switch in a convenient position and the system is ready to operate. Either, or both, reverberation and tremolo effect is available by switching the indicated switch ON or OFF.
7. The percentage of Reverberation can be controlled by the Reverberation Control, Channel 2 Loudness Control and the Volume Control of the Regular Amplifier.
8. The instrument is ready to be played. If reverb signal is not coming through, step on the foot switch as it may be in the OFF position. Thereafter, the reverb effect can be conveniently cut in or out at a snap of the foot switch.
9. When the Reverberation Foot Switch is OFF, the reverb unit operates as a regular amplifier adding an extra self-powered speaker that expands the regular amplifier sound without reverberation. If a cord length space separates the regular amplifier and the reverberation unit, an excellent impression of the "Stereo" and echo effect is obtained.
   When Reverberation Foot Switch is ON, the reverb signal is super-imposed on the above "Stereo" sound with a minimum contrast of volume change.

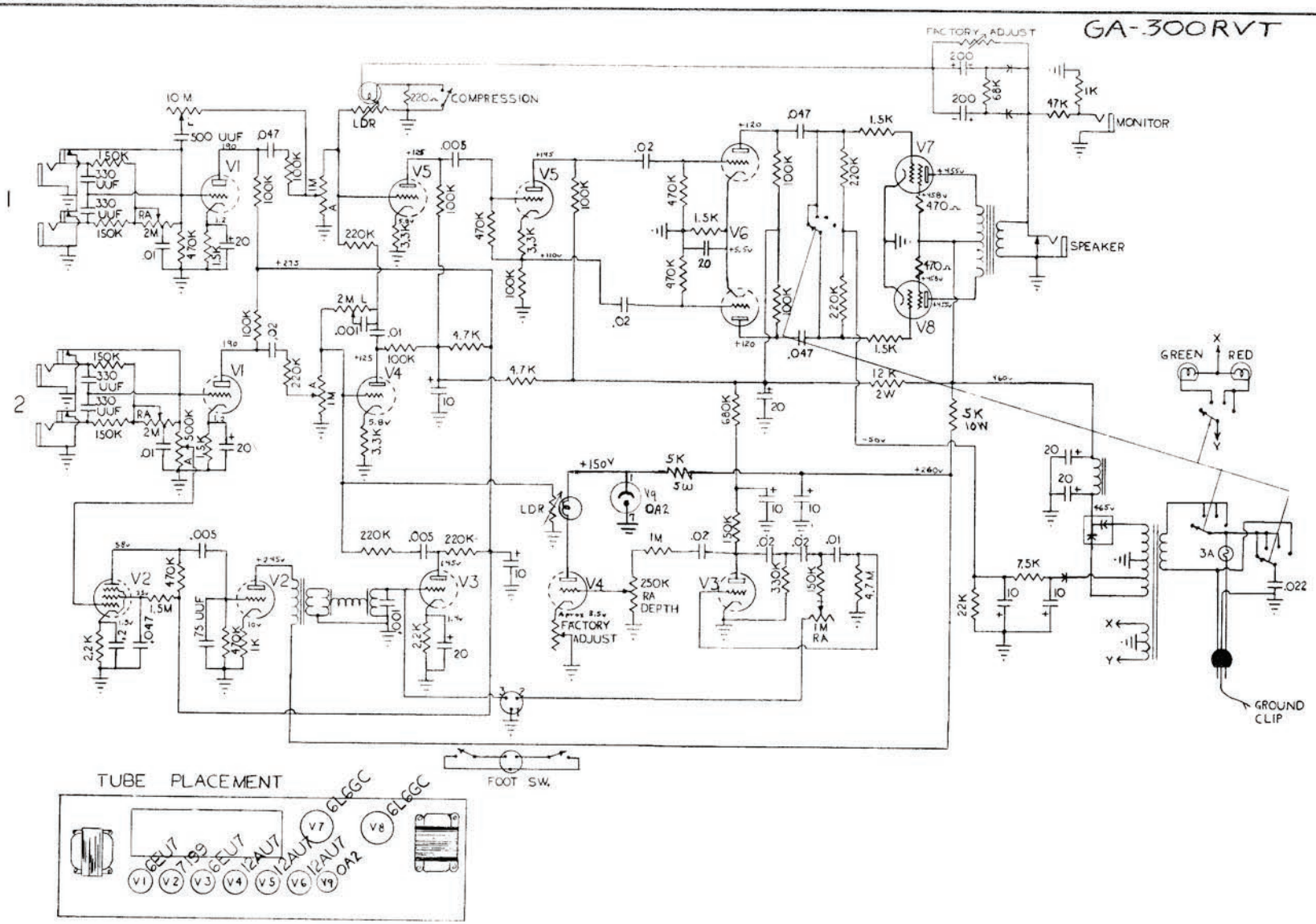

FUSE

The fuse used in this Amplifier is a type 3AG of three amperes rating.

DO NOT USE FUSES OF HIGHER RATING

SERVICE

If the amplifier is in need of servicing, it should be taken to a reliable radio man. The electrical diagram in this folder should be shown the repairman to assist him in servicing the amplifier.

GIBSON

MODEL GA-400 AMPLIFIER

INSTRUCTIONS

GIBSON INC., KALAMAZOO, MICH.

GA-400

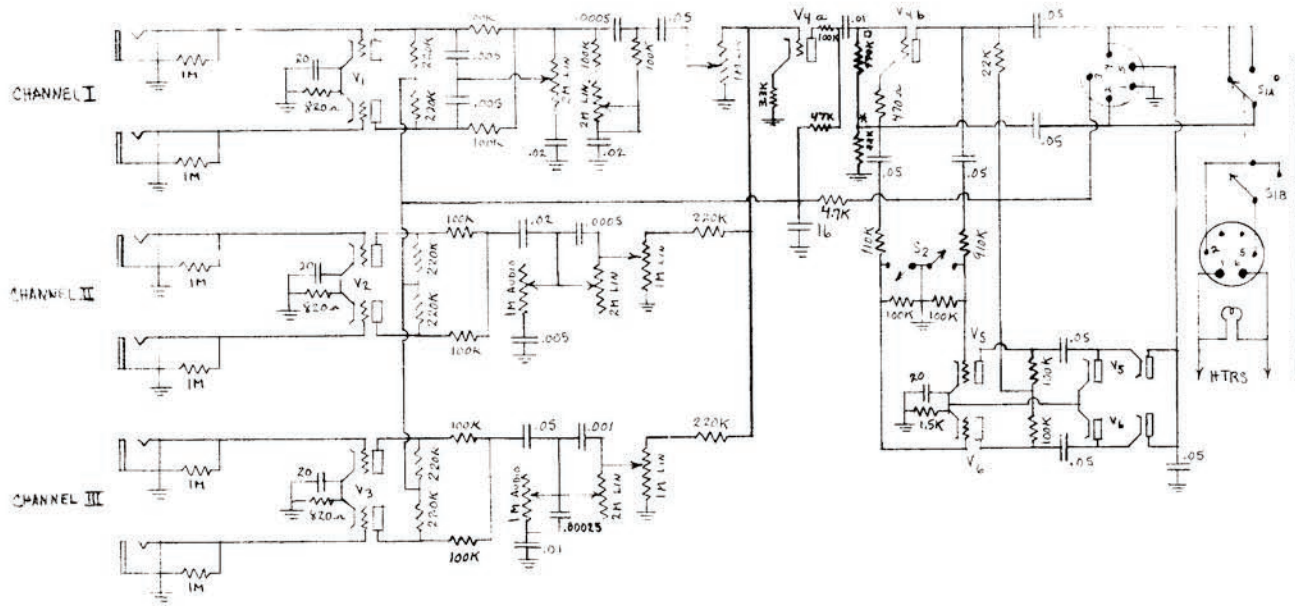

Tube Type & Ck	Ep	Esg	Eg	Ek
V1-12AX7 CHAN I PRE AMP	+135	—	0	+1.15
V2- " " II " "	+110	—	0	+.85
V3- " " III " "	+105	—	0	+.9
V4-12AY7 & MIXER AMP	+139	—	0	+1.2
V4-12AY7 & PHASE SPLITTER	+210	—	+62 +42	+6.4
V5-6BJ8 Comp. Amp + Rect.	+110	—	0	+4.9
V6- " " " "	+110	—	0	+4.9
V7-6SK7 DRIVER	+145	+42	-.1	+1.5
V8- " "	+145	+42	-.1	+1.5
V9-6550 PWR Amp	+570	+300	-33	0
V10- " " "	+570	+300	-33	0
V11-6V6 VOLTAGE REG.	+570	+570	+285	+300
V12-GZ34 RECTIFIER	470 V RMS	—	—	+580

ALL DC READINGS WITH 11 MEG VTVM MEASURED TO CHASSIS

TUBE LOCATION
PRE AMP

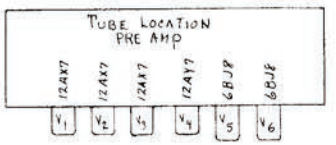

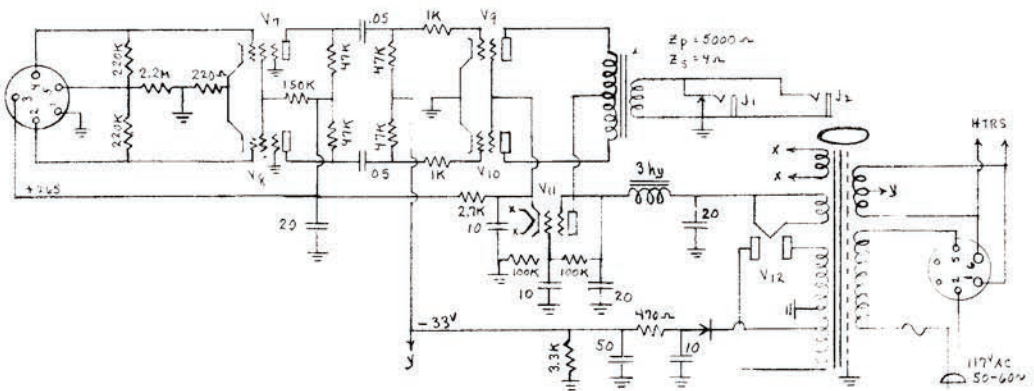

TUBE LOCATION
MAIN AMP

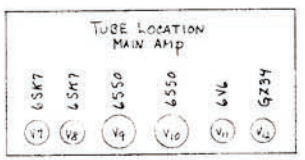

GIBSON AMPLIFIER — MODEL GA-400

The Gibson GA-400 is the finest, most versatile amplifier in the guitar field today. It has been designed and crafted to supply the guitarist with faithful high fidelity reproduction, at hitherto unknown volume and range. Its three separate channels and compression feature make it possible to play lead, rhythm and bass instruments simultaneously.

This fine equipment contains premium tubes, deluxe transformers, especially designed imported speakers, and the finest of other electronic components. The unit is housed in a sturdy solid lumber California Redwood case carefully designed for rugged beauty.

Like a fine watch or automobile, your amplifier requires care in handling and service. With a little study, you can quickly familiarize yourself with the controls and the use of the tremendous reserve power at your fingertips.

FIDELITY

The GA-400 is a High Fidelity Amplifier with 60 watts output with less than 3% distortion at a full 60 watts.

WIDE RANGE SPEAKERS

Equipped with two very heavy-duty 12″ twin cone speakers developed for this amplifier by a famous research laboratory, the full resonance speakers give a realistic "Living Sound" reproduction unmatched by other speakers.

PRE-AMPLIFIER

The amplifier is designed and constructed in two units. The pre-amplifier with the controls is mounted in the top of the case, while the main amplifier and power supply is mounted in the bottom of the case. This construction brings the controls to a position of maximum convenience and more evenly distributes the weight. This allows for excellent heat dissipation.

THREE CHANNELS

The pre-amplifier is divided into three separate channels with two input jacks in each channel. The exclusive terrace design indicates the channel separation at a glance. Each channel has an independent set of volume, treble, and bass voicing controls.

Channel 1 — Reproduces exceptionally high frequency notes with clear, bell-like tones — especially good for take-off.

Channel 2 — Reproduces mid-range frequencies with excellent definition.

Channel 3 — Reproduces very exceptional low frequency notes — as low as 40 cycles with a depth and clarity that is seldom equalled with portable equipment.

Complete isolation is provided among the three channels so that entirely different settings of the tone and volume controls can be used without inter-action. This permits three different styles in any combination—microphone, electric jazz guitar, rhythm guitar, bass or accordion — to be played at the same time with correct tone and volume settings for each instrument. The surplus power of the amplifier insures ample volume level for each instrument, but care should be used to avoid rattling the lights or other loose items in the room.

COMPRESSION SWITCH

The compression switch affects all three channels and should be used when high volume settings are used or when all three channels are in use. The compression feature — a Gibson exclusive — reduces the possibility of distortion and overloading of the speaker.

CONTROL SETTING

The dynamic range of the amplifier and the power-handling capabilities of the two special speakers is more than ample to faithfully reproduce all notes and their harmonics throughout the audio frequency range. The unusual clarity of tone and dispersement of sound permits setting the volume at a relatively low level for general use — seldom is all the power required — when it is, the design of the amplifier permits a full 60 watts output with less than 3% distortion.

VOICING CONTROLS

Each channel has its own set of Bass and Treble Voicing controls. With the Treble and Bass controls at the middle or upright setting, each channel will reproduce a medium voicing within its particular range. This can be varied to produce more treble or more bass within the range of each channel by setting the voicing controls to the desired tone quality.

CHANNEL TO USE

Players may wish to produce a specific tone or style by using a channel and setting to reproduce the "effect" desired, although the channel is normally used for another purpose. General suggested uses for the various channels:

Channel 1 — For high frequency response and take-off — microphone and lead instruments — Spanish Guitar, Steel Guitar, Mandolin, Tenor Guitar, voice, and other amplified lead instruments. Remember to use the compression feature when extra volume is used. This prevents overloading on low cycle frequencies.
The compression feature is operative in all three channels — most effective in channels Two and Three.

Channel 2 — For mid-range frequency response and rhythm — microphone, Spanish Guitar, Steel Guitar, Accordion. This channel is also excellent for lead instruments when a rounded, less penetrating but clear, definitive response is required. Use compression feature as required.

Channel 3 — For low frequency response with distortion-free power — electric bass, Accordion, Guitar, and other amplified instruments where deep, low frequency response is required. The compression feature is most effective in this channel.

EXTENSION SPEAKER JACKS

Equipped with switching jacks for extension speakers. The extension speaker can be plugged into the jack away from the baffle, and both the regular speaker and the extension speaker will disperse the sound; or, the extension speaker can be plugged into the other jack closest to baffle after removing the plug from the regular speaker and only the extension speaker will disperse the sound. Replace regular speaker plug into jack nearest baffle when amplifier only is used.

STANDBY SWITCH

The 110 Volt power switch has three positions: OFF, STANDBY, and ON. In the Standby position, the tubes are lighted and heating, but the speaker is disconnected, eliminating any possible accidental sounds. Movement of the switch from Standby to ON gives instant response without waiting to warm up.

OPERATION OF THE MICROPHONE

Because of the high power output, high gain and high fidelity characteristics of the GIBSON GA-400 Amplifier, it makes an exceptionally fine public address system when used with either the crystal, dynamic or velocity types of microphones. Channels one and two are recommended for microphone use.

While the Amplifier will operate very well with any of the crystal, medium or high impedance dynamic or velocity (ribbon) microphones, it is recommended that a GIBSON Dealer be consulted before investing in a microphone. Authorized Gibson Dealers can supply a microphone which has been selected and matched to the amplifier, thus insuring the most faithful reproduction of voice and music.

When using a microphone it is important that a shielded plug be attached to the cord. The ordinary phone plug with bakelite or other non-shielded cover is not suitable because the leads from the microphone must be completely shielded. Otherwise objectional hum will result. Figure B illustrates the proper way to connect the plug to the microphone cable. To use the microphone, insert the plug in the MICROPHONE socket and advance the Microphone Volume Control until a feedback squeal or howl is produced by the loudspeakers. Reduce the Volume Control to just below the feedback point. This setting will vary considerably depending upon the size of the room, its acoustical properties and the distance between the microphone and the loudspeaker. Feedback is the limiting factor in all public address installations and is caused when the level of sound from the loudspeakers is sufficient to actuate the microphone. The general rule when setting up the equipment is to place the loudspeaker as far from the microphone as possible.



FIGURE B

GENERAL

Amplifiers are carefully packed to prevent damage in shipment. However, upon receipt of the Amplifier, examine carefully to determine if there has been breakage of tubes or parts. If damage has occured during shipment, the Transportation Company should be notified immediately, and a claim placed.

CAUTION

Damage to the Amplifier will result if it is connected to an improper power source. This amplifier is designed to be operated on 105 - 125 volt, 50 - 60 cycle alternating current ONLY. Check the voltage from the power lines to determine that it is not over 125 volts, and the frequency of the current is either 50 or 60 cycles.

When ready to use power, plug the power cord into the electric outlet and move the switch to the ON position. Approximately one minute is required for the tubes to heat before the Amplifier is ready to use.

TUBES

Check tubes for proper positioning before placing the Amplifier in operation. All tubes have been tested and proved satisfactory before shipment.

GROUND CLIP

The AC Line Cord is equipped with an external Ground Clip that can be attached to any grounded object such as a water pipe, steam radiator, or to a grounded circuit such as is used in recording and broadcasting studios. This reduces extraneous noises and hum — a feature very essential for top notch performance.

SERVICE

If the Amplifier is in need of servicing, consult a reliable radio man. The electrical diagram herein should be shown to the repairman to assist him in servicing the Amplifier.

FUSE

The fuse in the GA-400 Amplifier is a type AG Slo-Blo of three ampere rating. DO NOT USE A FUSE OF HIGHER RATING.

Gibson

BASS AMP
ATLAS IV

INSTRUCTIONS

PRODUCT OF

Gibson Electronics

KALAMAZOO, MICHIGAN

UNPACKING

Amplifiers are carefully packed to prevent damage in shipment. However, upon receipt of the amplifier, examine carefully to determine if there has been breakage of tubes or parts. If damage has occurred during shipment, call the Transportation Company immediately, and place a claim.

CAUTION

Damage to the amplifier will result if it is connected to an improper power source. This amplifier is designed to be operated on 105-125 volt, 50-60 cycle alternating current only. The voltage from the power lines should not exceed 125, and the frequency of the current should be either 50 or 60 cycles. When ready to use amplifier, insert the plug on the power cord into the electric outlet and move switch to "on." After approximately one minute for the tubes to heat, the amplifier is ready for use.

SET UP INSTRUCTIONS

A set of 4 heavy duty casters are furnished with this amplifier for ease of moving it from one place to another. They are detached from the amplifier at time of shipment and are taped to the amplifier cabinet in a brown vinyl bag. They can be easily attached or detached as needed. When playing this amplifier at relatively high power output it is suggested the casters be removed to eliminate the possibility of synthetic vibrations or rattles.

The Piggy Back amplifier may be played on or off the speaker cabinet. When playing it on the speaker cabinet be sure it is fastened securely by the locking fixtures provided.

SPEAKER CORD CONNECTION

The speaker cord is packed with the A. C. supply cord. One end must be plugged into the speaker jack located on the speaker cabinet back panel and the other end should be plugged into the speaker jack located on the back of the amplifier chassis.

A.C. POWER-POLARITY SWITCH

A convenient switch has been provided for performing a total of three functions, turning the amplifier on and off, putting the amplifier in "Standby" and selecting the proper polarity of the power source which reduces the A.C. hum and other extraneous noises to a minimum. In the "Standby" position the amplifier is kept "warmed up" and ready to play at the instant the switch is advanced to the "On" positions. Two "On" positions have been provided. The hum and hiss level on one of the "On" positions will be noticeably lower — this is the correct "Polarity" for using the amplifier.

In locations of extremely high noise levels, clipping the "Ground Clip" to a grounded object will greatly reduce objectionable noise and hum.

As an added convenience to the artist this amplifier is equipped with a "Standby pilot light" as well as the "Regular pilot light". When the "Amber" light is on, the amplifier is in "Standby"; when the "Red" light is on the amplifier is "On" and ready to play.

TILT LEG

This amplifier is equipped with a "Tilt Leg" which allows the artist to change the angle of sound dispersion. See Figure 1.

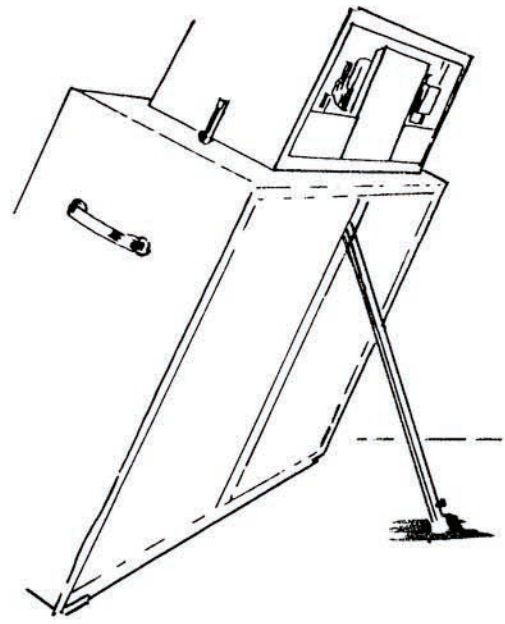

FIGURE 1.

OPERATION OF INSTRUMENTS

This Amplifier is equipped with two input jacks for use with various types and styles of instruments.

The gain for both jacks is adjusted by the control marked "Loudness". The tonal coloring can be varied by use of the "Bass" and "Treble" tone, controls. The "Bass" and "Treble" controls supply the artist, timbre adjustment. Proper setting will enhance the quality and power of the bass tones.

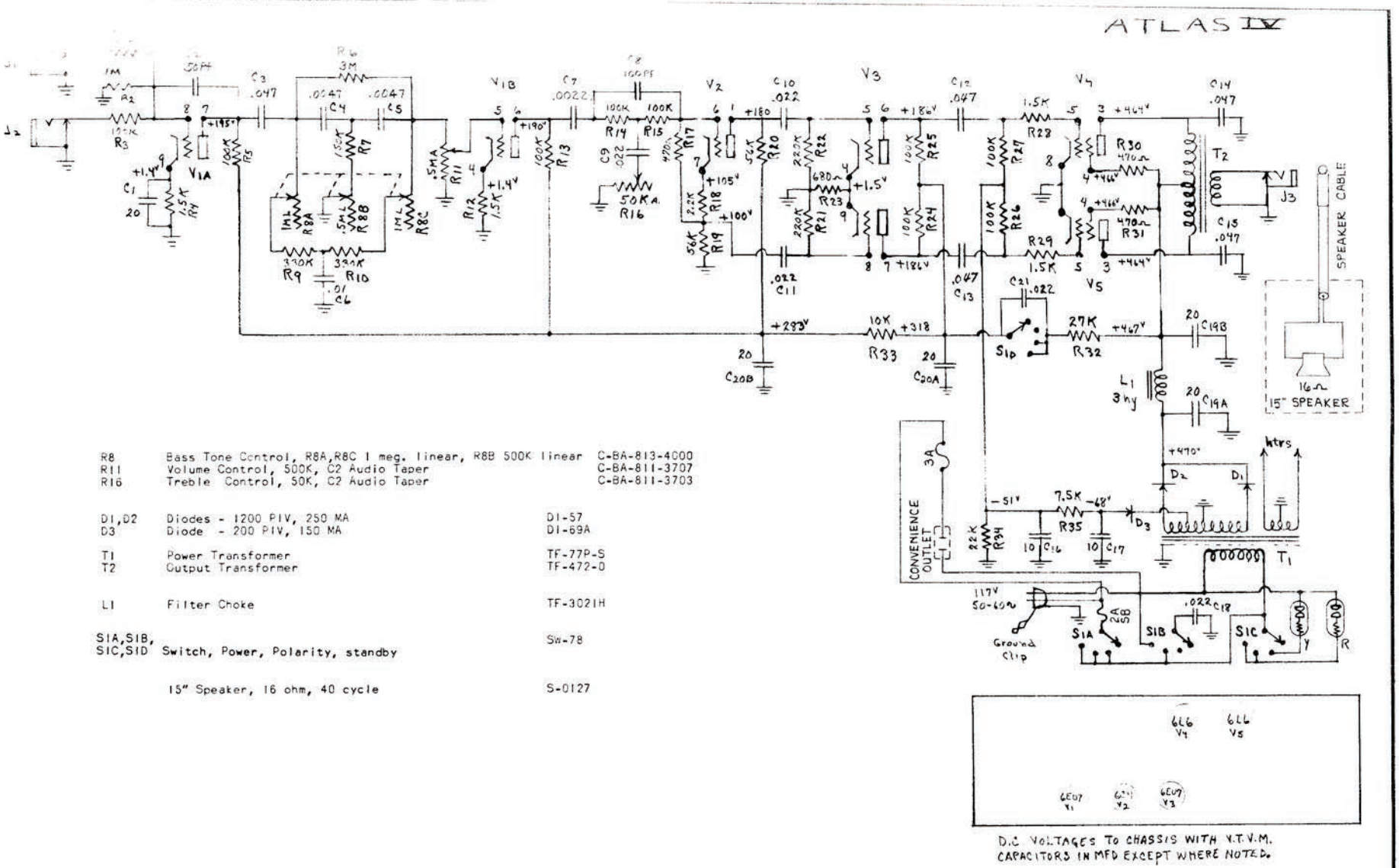

R8	Bass Tone Control, R8A,R8C 1 meg. linear, R8B 500K linear	C-BA-813-4000
R11	Volume Control, 500K, C2 Audio Taper	C-BA-811-3707
R16	Treble Control, 50K, C2 Audio Taper	C-BA-811-3703
D1,D2	Diodes - 1200 PIV, 250 MA	DI-57
D3	Diode - 200 PIV, 150 MA	DI-69A
T1	Power Transformer	TF-77P-S
T2	Output Transformer	TF-472-D
L1	Filter Choke	TF-3021H
S1A,S1B, S1C,S1D	Switch, Power, Polarity, standby	SW-78
	15" Speaker, 16 ohm, 40 cycle	S-0127

FUSE

The fuse used in this Amplifier is a type 3AG of three amperes rating.

DO NOT USE FUSES OF HIGHER RATING

SERVICE

If the amplifier is in need of servicing, it should be taken to a reliable radio man. The electrical diagram in this folder should be shown the repairman to assist him in servicing the amplifier.

Gibson

BASS AMP
ATLAS MEDALIST

INSTRUCTIONS

PRODUCT OF

Gibson Electronics

KALAMAZOO, MICHIGAN

UNPACKING

Amplifiers are carefully packed to prevent damage in shipment. However, upon receipt of the amplifier, examine carefully to determine if there has been breakage of tubes or parts. If damage has occurred during shipment, call the Transportation Company immediately, and place a claim.

CAUTION

Damage to the amplifier will result if it is connected to an improper power source. This amplifier is designed to be operated on 105-125 volt, 50-60 cycle alternating current only. The voltage from the power lines should not exceed 125, and the frequency of the current should be either 50 or 60 cycles. When ready to use amplifier, insert the plug on the power cord into the electric outlet and move switch to "on." After approximately one minute for the tubes to heat, the amplifier is ready for use.

SET UP INSTRUCTIONS

A set of 4 heavy duty casters are furnished with this amplifier for ease of moving it from one place to another. They are detached from the amplifier at time of shipment and are taped to the amplifier cabinet in a brown vinyl bag. They can be easily attached or detached as needed. When playing this amplifier at relatively high power output it is suggested the casters be removed to eliminate the possibility of synthetic vibrations or rattles.

A.C. POWER-POLARITY SWITCH

A convenient switch has been provided for performing a total of three functions, turning the amplifier on and off, putting the amplifier in "Standby" and selecting the proper polarity of the power source which reduces the A.C. hum and other extraneous noises to a minimum. In the "Standby" position the amplifier is kept "warmed up" and ready to play at the instant the switch is advanced to the "On" positions. Two "On" positions have been provided. The hum and hiss level on one of the "On" positions will be noticeably lower — this is the correct "Polarity" for using the amplifier.

As an added convenience to the artist this amplifier is equipped with a "Standby pilot light" as well as the "Regular pilot light". When the "Amber" light is on, the amplifier is in "Standby"; when the "Red" light is on the amplifier is "On" and ready to play.

FUSE

The fuse used in this Amplifier is a type 3 AG Slo-Blo of two amperes rating. DO NOT USE FUSES OF HIGHER RATING.

SERVICE

If the amplifier is in need of servicing, it should be taken to a reliable radio man. The electrical diagram in this folder should be shown to the repairman to assist him in servicing the amplifier.

TILT LEG

This amplifier is equipped with a "Tilt Leg" which allows the artist to change the angle of sound dispersion. See Figure 1.

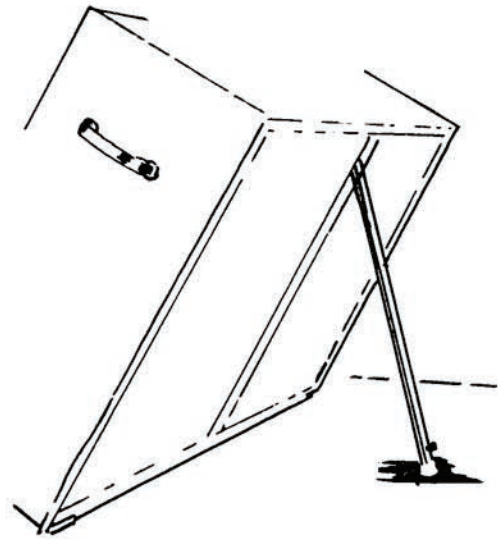

FIGURE 1.

OPERATION OF INSTRUMENTS

This Amplifier is equipped with two input jacks for use with various types and styles of instruments.

The gain for both jacks is adjusted by the control marked "Loudness". The tonal coloring can be varied by use of the "Bass" and "Treble" tone, controls. The "Bass" and "Treble" controls supply the artist, timbre adjustment. Proper setting will enhance the quality and power of the bass tones.

ATLAS MEDALIST

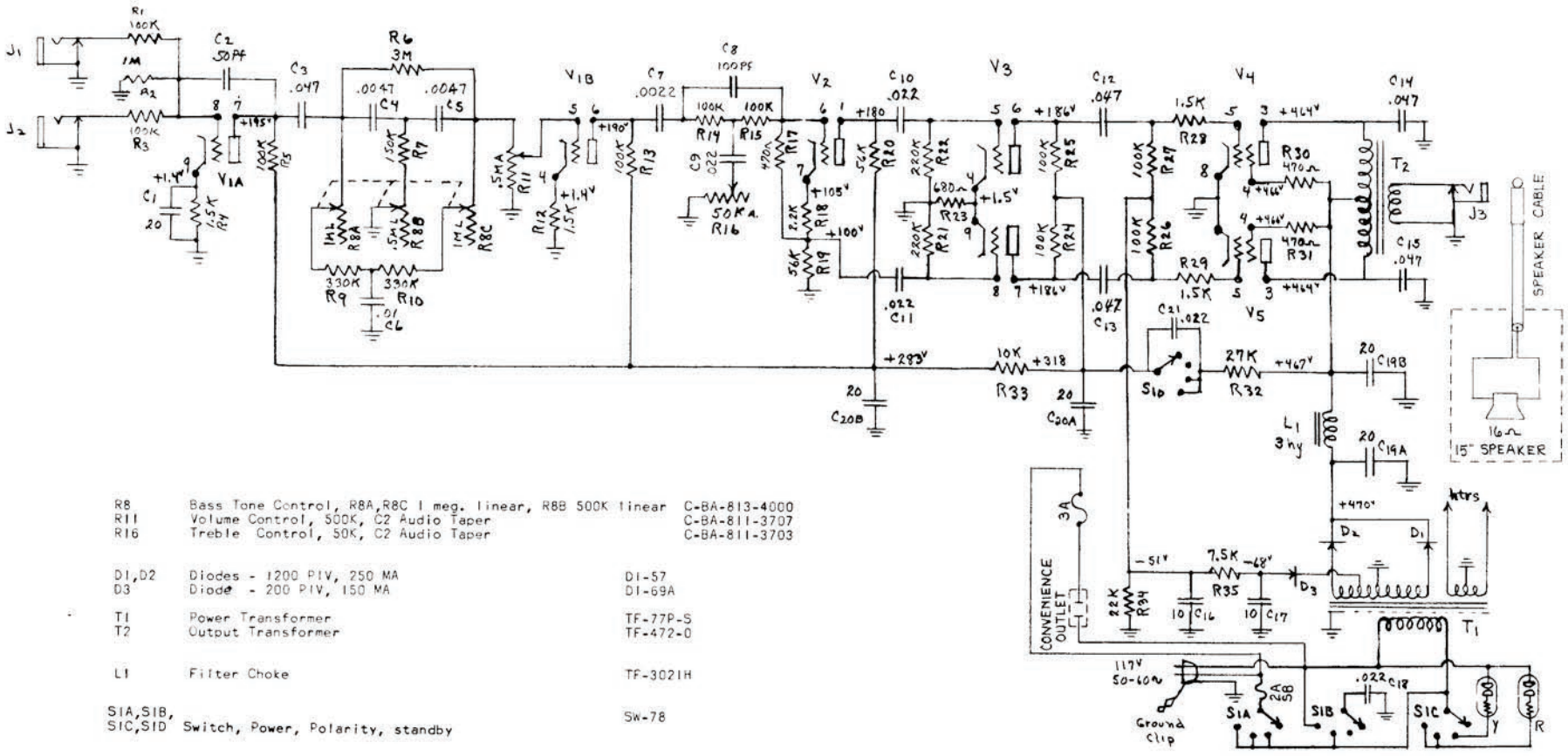

R8	Bass Tone Control, R8A,R8C 1 meg. linear, R8B 500K linear	C-BA-813-4000
R11	Volume Control, 500K, C2 Audio Taper	C-BA-811-3707
R16	Treble Control, 50K, C2 Audio Taper	C-BA-811-3703
D1,D2	Diodes - 1200 PIV, 250 MA	D1-57
D3	Diode - 200 PIV, 150 MA	D1-69A
T1	Power Transformer	TF-77P-S
T2	Output Transformer	TF-472-0
L1	Filter Choke	TF-3021H
S1A,S1B, S1C,S1D	Switch, Power, Polarity, standby	SW-78
	15" Speaker, 16 ohm, 40 cycle	S-0127

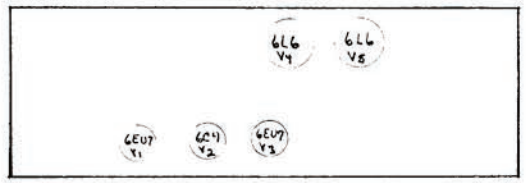

D.C. VOLTAGES TO CHASSIS WITH V.T.V.M.
CAPACITORS IN MFD EXCEPT WHERE NOTED.

Gibson

MERCURY I AND II

"WITH SPECTRUM CONTROL"

INSTRUCTIONS

PRODUCT OF

Gibson Electronics

KALAMAZOO, MICHIGAN

UNPACKING

Amplifiers are carefully packed to prevent damage in shipment. However, upon receipt of the amplifier, examine carefully to determine if there has been breakage of tubes or parts. If damage has occurred during shipment, call the Transportation Company immediately, and place a claim.

CAUTION

Damage to the amplifier will result if it is connected to an improper power source. This amplifier is designed to be operated on 105-125 volt, 50-60 cycle alternating current only. The voltage from the power lines should not exceed 125, and the frequency of the current should be either 50 or 60 cycles. When ready to use amplifier, insert the plug on the power cord into the electric outlet and move switch to "on." After approximately one minute for the tubes to heat, the amplifier is ready for use.

SET UP INSTRUCTIONS

A set of 4 heavy duty casters are furnished with this amplifier for ease of moving it from one place to another. They are detached from the amplifier at time of shipment and are taped to the amplifier cabinet in a brown vinyl bag. They can be easily attached or detached as needed. When playing this amplifier at relatively high power output it is suggested the casters be removed to eliminate the possibility of synthetic vibrations or rattles.

The Piggy Back amplifier may be played on or off the speaker cabinet. When playing it on the speaker cabinet be sure it is fastened securely by the locking fixtures provided.

SPEAKER CORD CONNECTION

The speaker cord is packed with the A. C. supply cord. One end must be plugged into the speaker jack located on the speaker cabinet back panel and the other end should be plugged into the speaker jack located on the back of the amplifier chassis.

A.C. POWER-POLARITY SWITCH

A convenient switch has been provided for performing a total of three functions, turning the amplifier on and off, putting the amplifier in "Standby" and selecting the proper polarity of the power source which reduces the A.C. hum and other extraneous noises to a minimum. In the "Standby" position the amplifier is kept "warmed up" and ready to play at the instant the switch is advanced to the "On" positions. Two "On" positions have been provided. The hum and hiss level on one of the "On" positions will be noticeably lower — this is the correct "Polarity" for using the amplifier.

In locations of extremely high noise levels, clipping the "Ground Clip" to a grounded object will greatly reduce objectionable noise and hum.

As an added convenience to the artist this amplifier is equipped with a "Standby pilot light" as well as the "Regular pilot light". When the "Amber" light is on, the amplifier is in "Standby"; when the "Red" light is on the amplifier is "On" and ready to play.

OPERATION OF MICROPHONE

The high gain and characteristics of this amplifier, permit the use of most of the popular high impedance microphones for public address work.

TILT LEG

This amplifier is equipped with a "Tilt Leg" which allows the artist to change the angle of sound dispersion. See Figure 1.

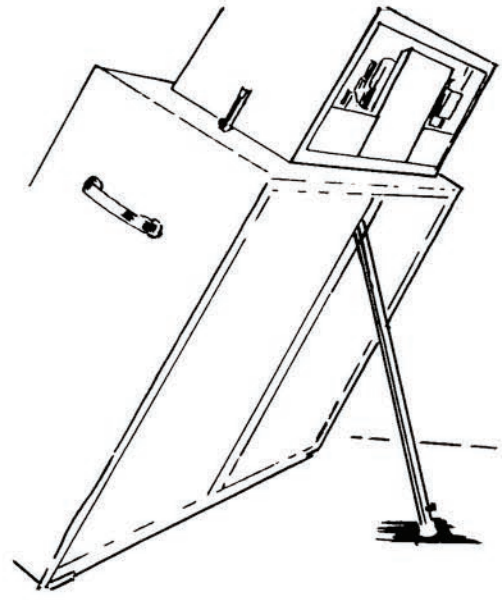

FIGURE 1.

TREMOLO — EFFECTIVE IN CHANNEL 1 ONLY

The Tremolo effect is turned on and off by means of a Push Type Foot Switch. The Tremolo frequency of the Amplifier is controlled by the Variable Control marked "Frequency." The speeds have been carefully set to cover a wide range of Tremolo effects. The depth of the Tremolo is also variable being controlled by the "Depth" Control.

TWO CHANNELS

The Pre-Amplifier is divided into separate channels with two input jacks in each channel. Each channel has an independent set of volume, treble, mid and bass voicing controls.

Complete isolation is provided between the two channels so that entirely different settings of tone and volume controls can be used without inter-action. This permits two different styles in any combination — microphone, electric jazz guitar, rhythm guitar, bass or accordion — to be played at the same time with correct tone and volume settings for each instrument.

SPECTRUM CONTROLS

The wide range of tonal extremes required by different artists can all be accommodated with Gibson Spectrum Control. For maximum loudness with a given power, the "treble" control should be Maximum, the "mid range" minimum, and the bass near 5. With this adjustment the tone controls on the guitar will have their maximum effectiveness.

"Jazz" sound to the artist taste can be had by reducing the "treble", adding some "mid range", and adjusting the "bass" to the artist requirement.

Spectrum Controls plus the tone controls on the artist's instrument offer an endless variety of tonal color.

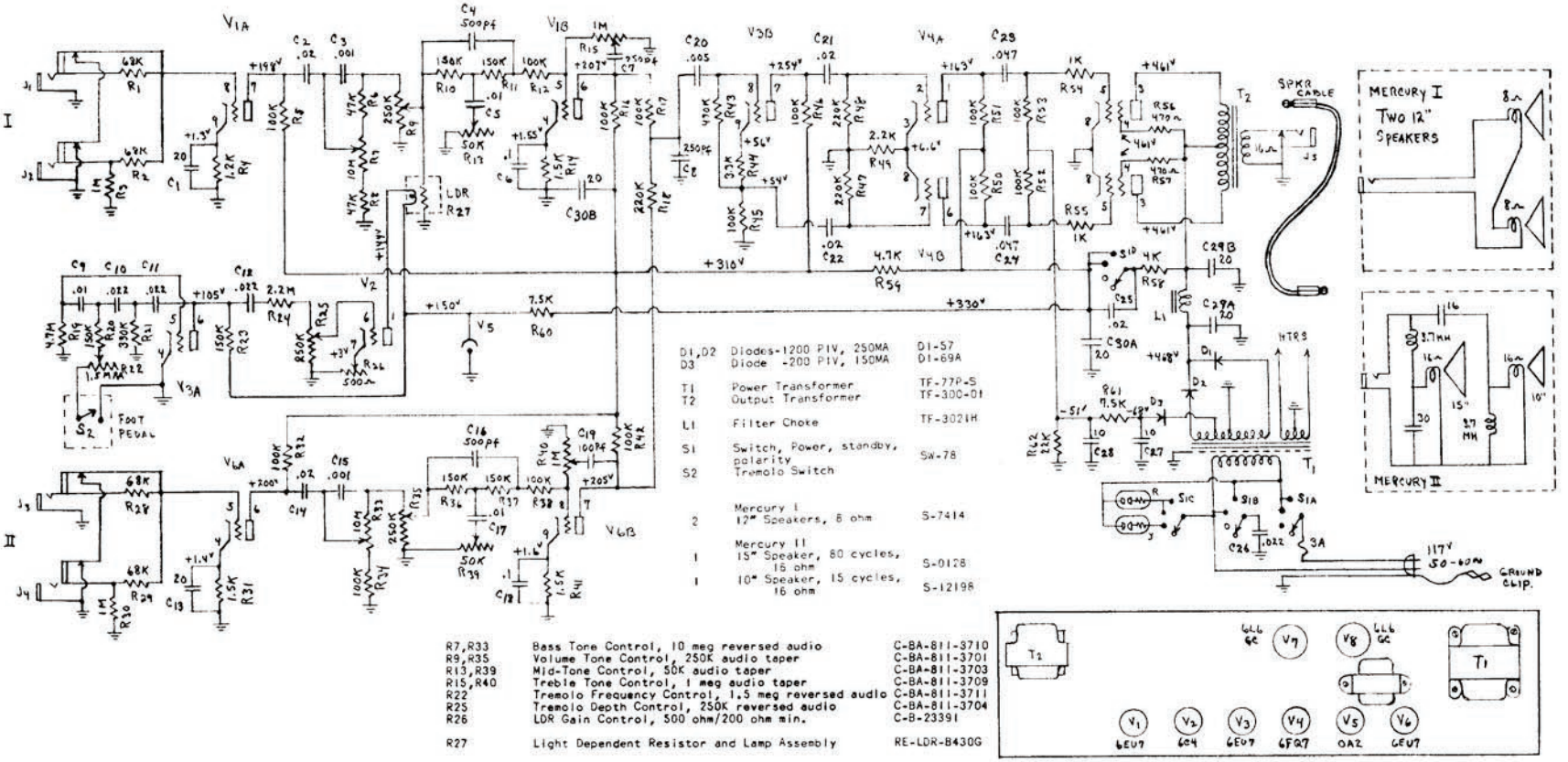

Mercury I and II

FUSE

The fuse used in this Amplifier is a type 3AG of three amperes rating.

DO NOT USE FUSES OF HIGHER RATING

SERVICE

If the amplifier is in need of servicing, it should be taken to a reliable radio man. The electrical diagram in this folder should be shown the repairman to assist him in servicing the amplifier.

Gibson

TITAN I-III AND V

"WITH SPECTRUM CONTROL"

INSTRUCTIONS

PRODUCT OF

Gibson Electronics

KALAMAZOO, MICHIGAN

T1	Power Transformer	TF-135P	R63,R59	50K Audio Taper (mid-control) control	C-BA-811-3703
T2	Output Transformer	TF-531-0	R61	10 meg reversed audio (bass) control	C-BA-811-3710
T3	Auto Transformer - 8 ohm, 16 ohm	TF-130A	R58,R66	250K audio taper (volume & depth) control	C-BA-811-3701
L1	Filter Choke	TF-3021H	R57	2 meg reversed audio (bass) control	C-BA-811-3751
			R62,R60	500K audio taper (volume & treble) control	C-BA-811-3707
L1,L2	Inductances 3.7 mh		R64	1 meg audio taper (treble) control	C-BA-811-3709
			R67	1.5 meg reversed audio (frequency) control	C-BA-811-3711
S1	Switch - off, standby, on-on	SW-78	R65	500 ohm wire wound control	C-B-23391
LDR-1	Light Dependent Resistor Lamp Assembly	RE-LDR-430G			
(2)	Speakers, 10" 8 ohm for Titan 3	S-12197			
(1)	Speaker, 15" 16 ohm for Titan 3	S-0128			
(2)	Speakers, 15" 16 ohm for Titan 5	D-130F			
(2)	Speakers, 12" 8 ohm for Titan 1	S-7414-2			

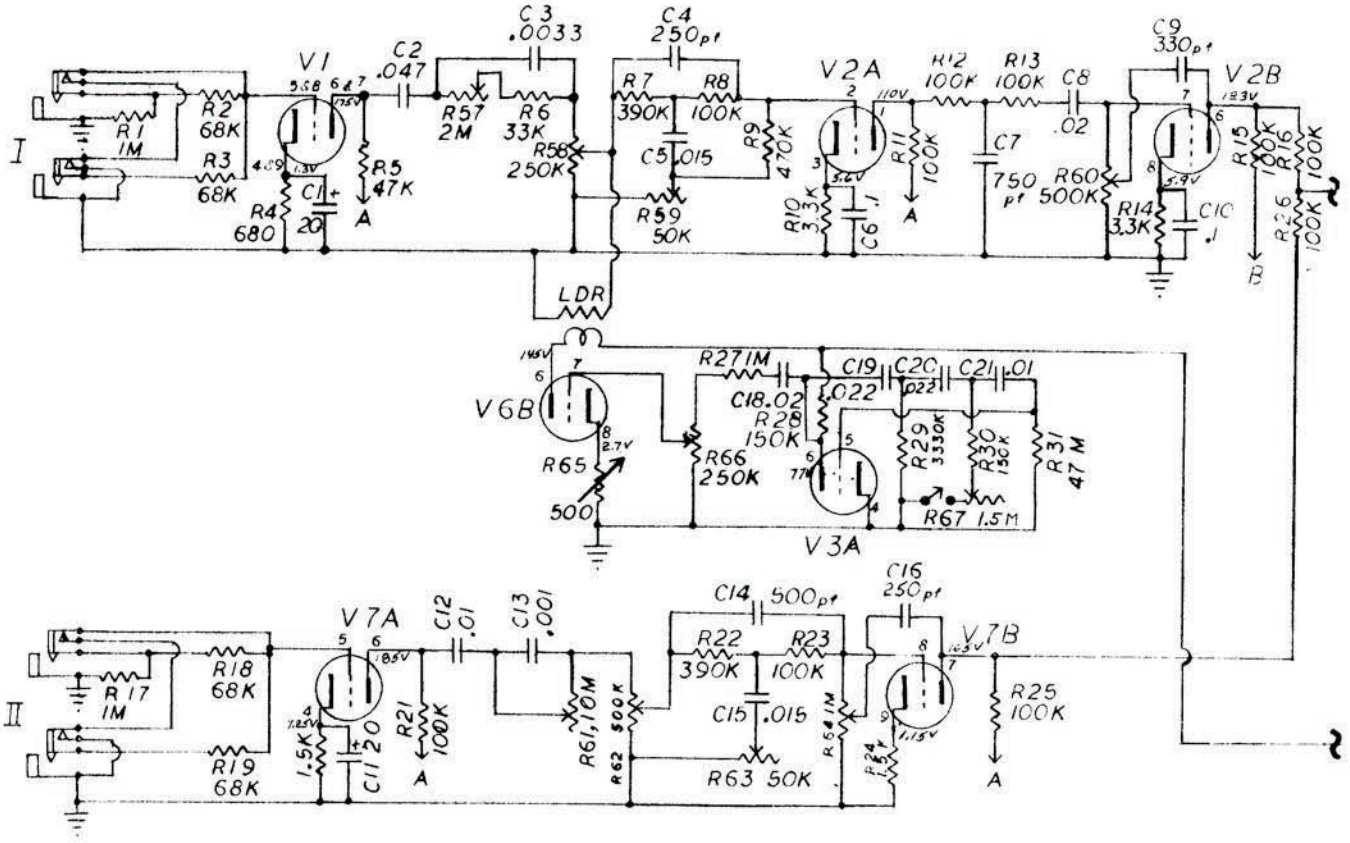

UNPACKING

Amplifiers are carefully packed to prevent damage in shipment. However, upon receipt of the amplifier, examine carefully to determine if there has been breakage of tubes or parts. If damage has occurred during shipment, call the Transportation Company immediately, and place a claim.

CAUTION

Damage to the amplifier will result if it is connected to an improper power source. This amplifier is designed to be operated on 105-125 volt, 50-60 cycle alternating current only. The voltage from the power lines should not exceed 125, and the frequency of the current should be either 50 or 60 cycles. When ready to use amplifier, insert the plug on the power cord into the electric outlet and move switch to "on." After approximately one minute for the tubes to heat, the amplifier is ready for use.

SET UP INSTRUCTIONS

A set of 4 heavy duty casters are furnished with this amplifier for ease of moving it from one place to another. They are detached from the amplifier at time of shipment and are taped to the amplifier cabinet in a brown vinyl bag. They can be easily attached or detached as needed. When playing this amplifier at relatively high power output it is suggested the casters be removed to eliminate the possibility of synthetic vibrations or rattles.

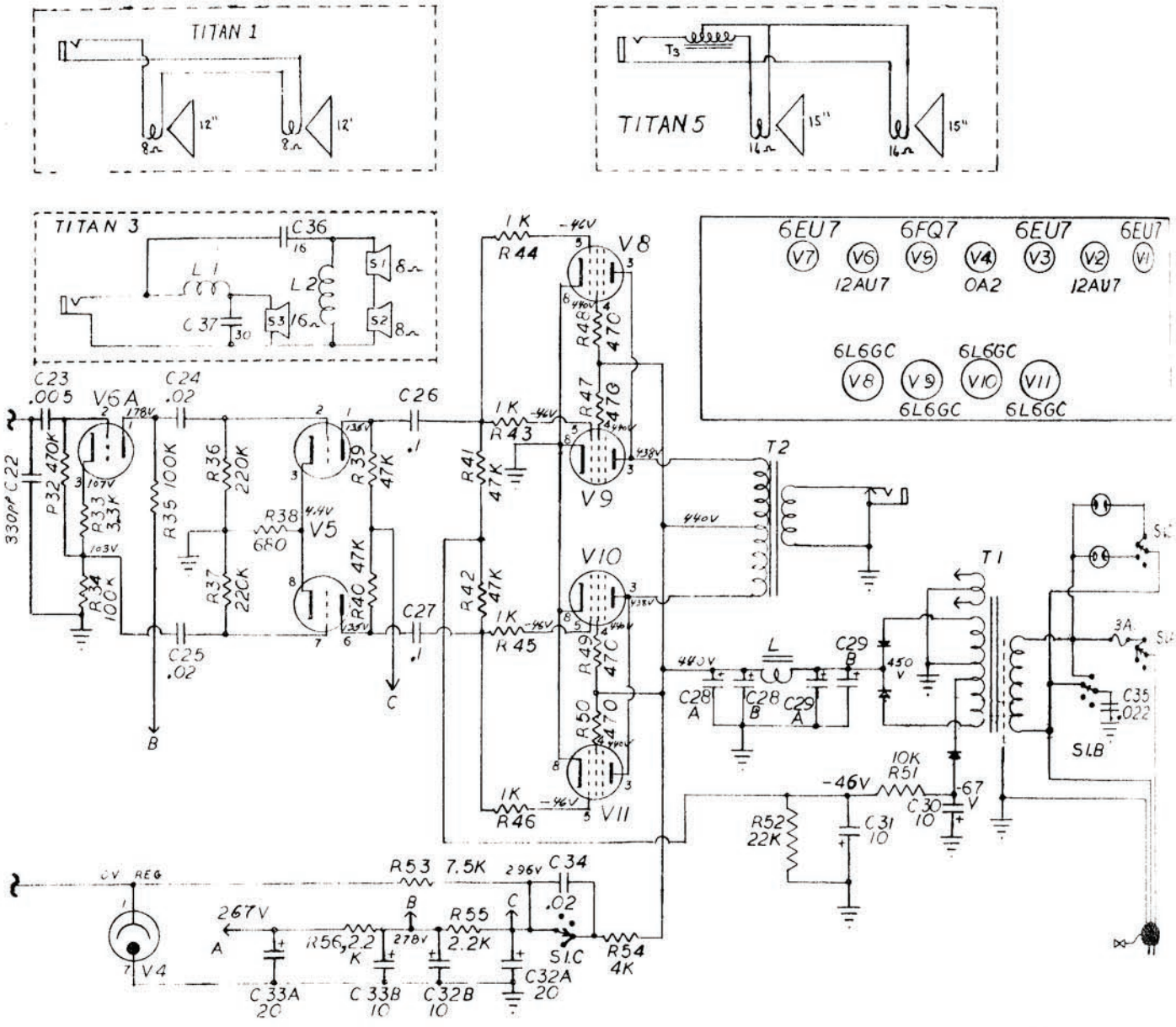

The Piggy Back amplifier may be played on or off the speaker cabinet. When playing it on the speaker cabinet be sure it is fastened securely by the locking fixtures provided.

SPEAKER CORD CONNECTION

The speaker cord is packed with the A. C. supply cord. One end must be plugged into the speaker jack located on the speaker cabinet back panel and the other end should be plugged into the speaker jack located on the back of the amplifier chassis.

A.C. POWER-POLARITY SWITCH

A convenient switch has been provided for performing a total of three functions, turning the amplifier on and off, putting the amplifier in "Standby" and selecting the proper polarity of the power source which reduces the A.C. hum and other extraneous noises to a minimum. In the "Standby" position the amplifier is kept "warmed up" and ready to play at the instant the switch is advanced to the "On" positions. Two "On" positions have been provided. The hum and hiss level on one of the "On" positions will be noticeably lower — this is the correct "Polarity" for using the amplifier.

In locations of extremely high noise levels, clipping the "Ground Clip" to a grounded object will greatly reduce objectionable noise and hum.

As an added convenience to the artist this amplifier is equipped with a "Standby pilot light" as well as the "Regular pilot light". When the "Amber" light is on, the amplifier is in "Standby"; when the "Red" light is on the amplifier is "On" and ready to play.

OPERATION OF THE MICROPHONE

The high gain and characteristics of this amplifier, permit the use of most of the popular high impedance microphones for public address work.

TILT LEG

This amplifier is equipped with a "Tilt Leg" which allows the artist to change the angle of sound dispersion. See Figure 1.

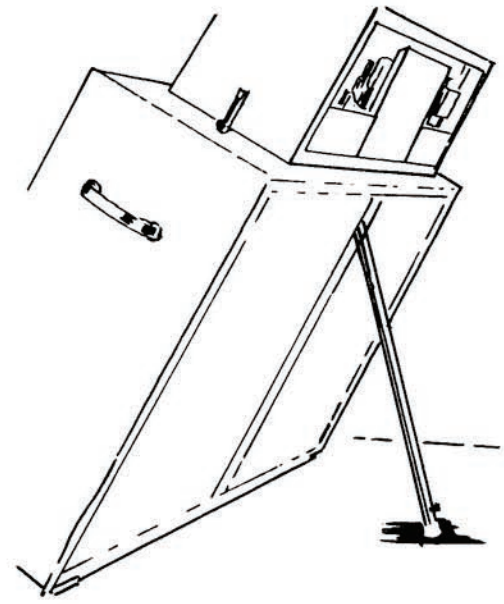

FIGURE 1.

SPECTRUM CONTROLS

The wide range of tonal extremes required by different artists can all be accommodated with Gibson Spectrum Control. For maximum loudness with a given power, the "treble" control should be Maximum, the "mid range" minimum, and the bass near 5. With this adjustment the tone controls on the guitar will have their maximum effectiveness.

"Jazz" sound to the artist taste can be had by reducing the "treble", adding some "mid range", and adjusting the "bass" to the artist requirement.

Spectrum Controls plus the tone controls on the artist's instrument offer an endless variety of tonal color.

TREMOLO — EFFECTIVE IN CHANNEL 1 ONLY

The Tremolo effect is turned on and off by means of a Push Type Foot Switch. The Tremolo frequency of the Amplifier is controlled by the Variable Control marked "Frequency." The speeds have been carefully set to cover a wide range of Tremolo effects. The depth of the Tremolo is also variable being controlled by the "Depth" Control.

TWO CHANNELS

The Pre-Amplifier is divided into separate channels with two input jacks in each channel. Each channel has an independent set of volume, treble and bass voicing controls.

Complete isolation is provided between the two channels so that entirely different settings of tone and volume controls can be used without inter-action. This permits two different styles in any combination — microphone, electric jazz guitar, rhythm guitar, bass or accordion — to be played at the same time with correct tone and volume settings for each instrument. The surplus power of the amplifier insures ample volume level for each instrument.

FUSE

The fuse used in this Amplifier is a type 3AG of three amperes rating. DO NOT USE FUSES OF HIGHER RATING

SERVICE

If the Amplifier is in need of servicing, consult a reliable radio man. The electrical diagram herein should be shown to the repairman to assist him in servicing the Amplifier.

2-64 500 H.P.Co.

Gibson

TITAN MEDALIST

"WITH SPECTRUM CONTROL"

INSTRUCTIONS

PRODUCT OF

Gibson Electronics

KALAMAZOO, MICHIGAN

T1	Power Transformer	TF-135P	R63,R59	50K Audio Taper (mid-control) control	C-BA-811-3703
T2	Output Transformer	TF-531-0	R61	10 meg reversed audio (bass) control	C-BA-811-3710
T3	Auto Transformer - 8 ohm, 16 ohm	TF-130A	R58,R66	250K audio taper (volume & depth) control	C-BA-811-3701
L3	Filter Choke	TF-3021H	R57	2 meg reversed audio (bass) control	C-BA-811-3751
			R62,R60	500K audio taper (volume & treble) control	C-BA-811-3707
L1,L2	Inductances 3.7 mh		R64	1 meg audio taper (treble) control	C-BA-811-3709
			R67	1.5 meg reversed audio (frequency) control	C-BA-811-3711
S1	Switch - off, standby, on-on	SW-78	R65	500 ohm wire wound control	C-B-23391

LDR-1 Light Dependent Resistor Lamp Assembly RE-LDR-430G

SP2 (1) Speakers, 15" 16 ohm S-0127
SP1 (1) Speakers, 10" 16 ohm S-7646

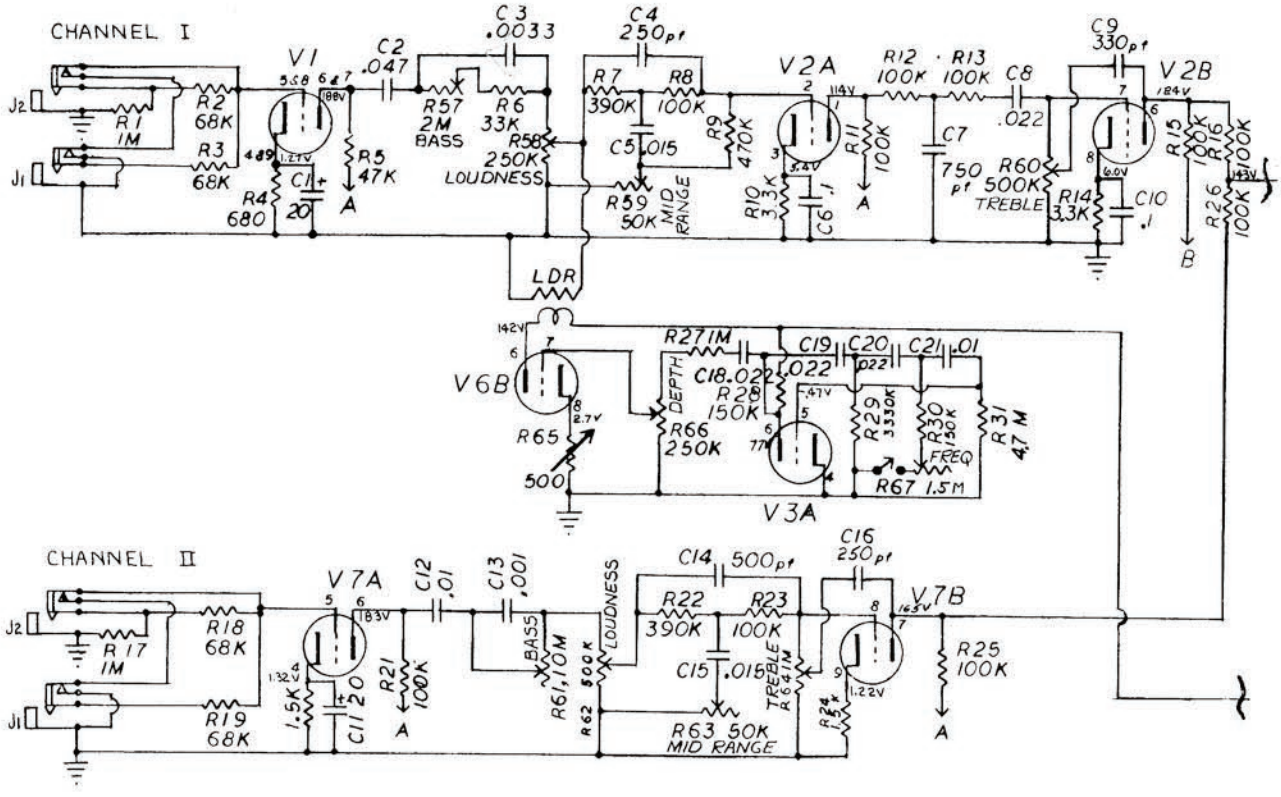

UNPACKING

Amplifiers are carefully packed to prevent damage in shipment. However, upon receipt of the amplifier, examine carefully to determine if there has been breakage of tubes or parts. If damage has occurred during shipment, call the Transportation Company immediately, and place a claim.

CAUTION

Damage to the amplifier will result if it is connected to an improper power source. This amplifier is designed to be operated on 105-125 volt, 50-60 cycle alternating current only. The voltage from the power lines should not exceed 125, and the frequency of the current should be either 50 or 60 cycles. When ready to use amplifier, insert the plug on the power cord into the electric outlet and move switch to "on." After approximately one minute for the tubes to heat, the amplifier is ready for use.

SET UP INSTRUCTIONS

A set of 4 heavy duty casters are furnished with this amplifier for ease of moving it from one place to another. They are detached from the amplifier at time of shipment and are taped to the amplifier cabinet in a brown vinyl bag. They can be easily attached or detached as needed. When playing this amplifier at relatively high power output it is suggested the casters be removed to eliminate the possibility of synthetic vibrations or rattles.

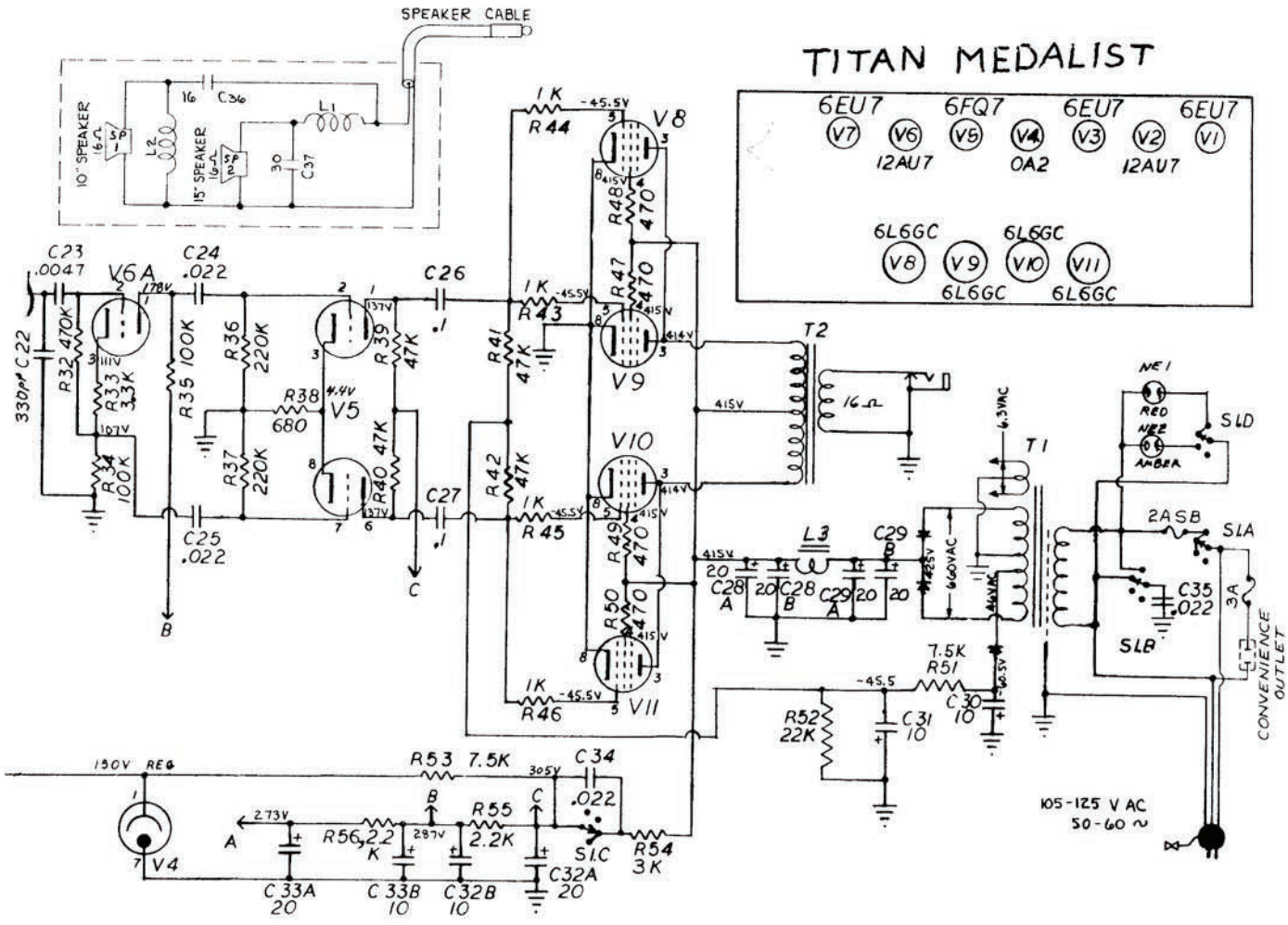

A.C. POWER-POLARITY SWITCH

A convenient switch has been provided for performing a total of three functions, turning the amplifier on and off, putting the amplifier in "Standby" and selecting the proper polarity of the power source which reduces the A.C. hum and other extraneous noises to a minimum. In the "Standby" position the amplifier is kept "warmed up" and ready to play at the instant the switch is advanced to the "On" positions. Two "On" positions have been provided. The hum and hiss level on one of the "On" positions will be noticeably lower — this is the correct "Polarity" for using the amplifier.

As an added convenience to the artist this amplifier is equipped with a "Standby pilot light" as well as the "Regular pilot light". When the "Amber" light is on, the amplifier is in "Standby"; when the "Red" light is on the amplifier is "On" and ready to play.

OPERATION OF THE MICROPHONE

The high gain and characteristics of this amplifier, permit the use of most of the popular high impedance microphones for public address work.

TILT LEG

This amplifier is equipped with a "Tilt Leg" which allows the artist to change the angle of sound dispersion. See Figure 1.

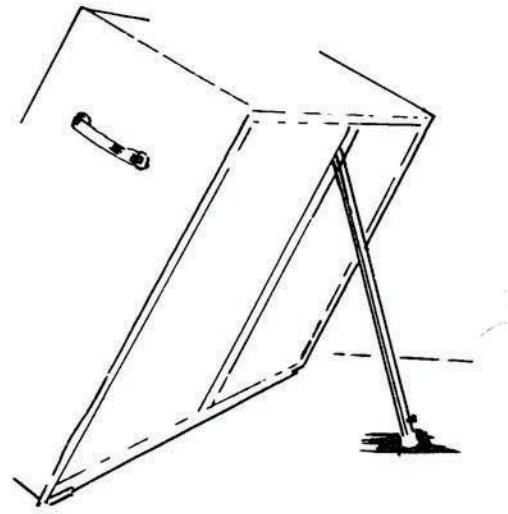

FIGURE 1.

SPECTRUM CONTROLS

The wide range of tonal extremes required by different artists can all be accommodated with Gibson Spectrum Control. For maximum loudness with a given power, the "treble" control should be Maximum, the "mid range" minimum, and the bass near 5. With this adjustment the tone controls on the guitar will have their maximum effectiveness.

"Jazz" sound to the artist taste can be had by reducing the "treble", adding some "mid range", and adjusting the "bass" to the artist requirement.

Spectrum Controls plus the tone controls on the artist's instrument offer an endless variety of tonal color.

TREMOLO — EFFECTIVE IN CHANNEL 1 ONLY

The Tremolo effect is turned on and off by means of a Push Type Foot Switch. The Tremolo frequency of the Amplifier is controlled by the Variable Control marked "Frequency." The speeds have been carefully set to cover a wide range of Tremolo effects. The depth of the Tremolo is also variable being controlled by the "Depth" Control.

TWO CHANNELS

The Pre-Amplifier is divided into separate channels with two input jacks in each channel. Each channel has an independent set of volume, treble and bass voicing controls.

Complete isolation is provided between the two channels so that entirely different settings of tone and volume controls can be used without inter-action. This permits two different styles in any combination — microphone, electric jazz guitar, rhythm guitar, bass or accordion — to be played at the same time with correct tone and volume settings for each instrument. The surplus power of the amplifier insures ample volume level for each instrument.

FUSE

The fuse used in this Amplifier is a type 3 AG Slo-Blo of two amperes rating. DO NOT USE FUSES OF HIGHER RATING.

SERVICE

If the Amplifier is in need of servicing, consult a reliable radio man. The electrical diagram herein should be shown to the repairman to assist him in servicing the Amplifier.

8-64 500 H.P.Co.

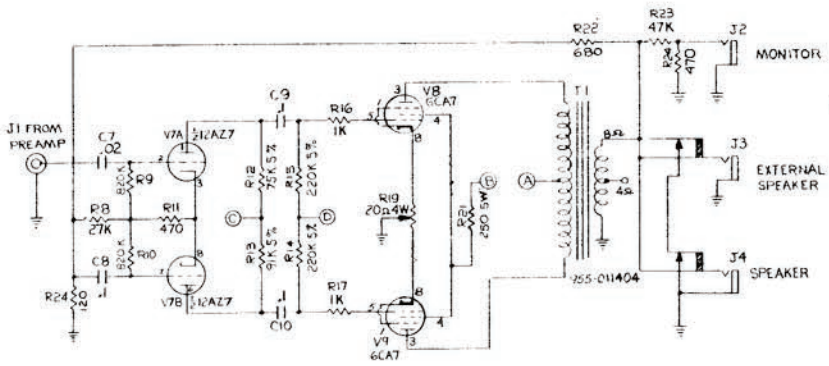

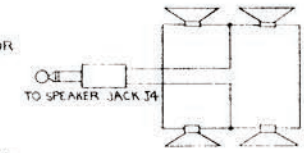

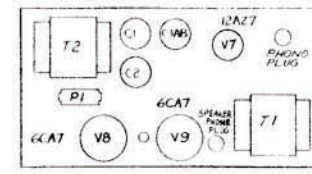

POWER CHASSIS TUBE LOCATIONS

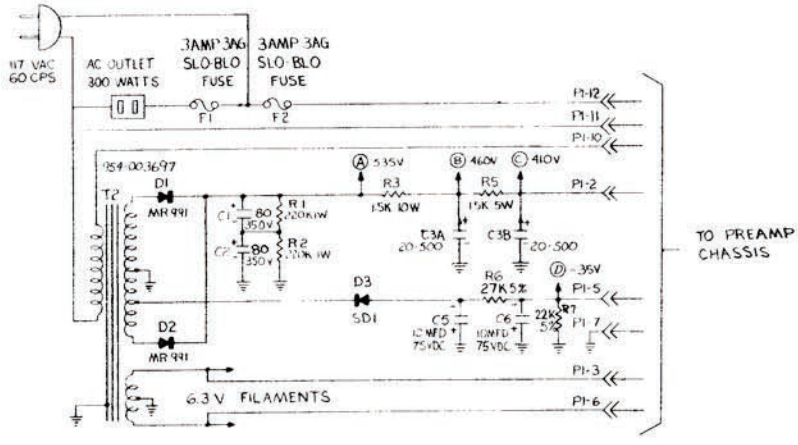

NOTES :

1. ALL VOLTAGES TAKEN WITH VTVM TO GROUND AT NO SIGNAL, INPUT SHORTED, TREMOLO AND REVERB OFF, BASS, TREBLE, AND MIDRANGE MAX. PRESENCE OFF.

MEDALIST 4/10 POWER CHASSIS SCHEMATIC

Rev. April 18, 1968

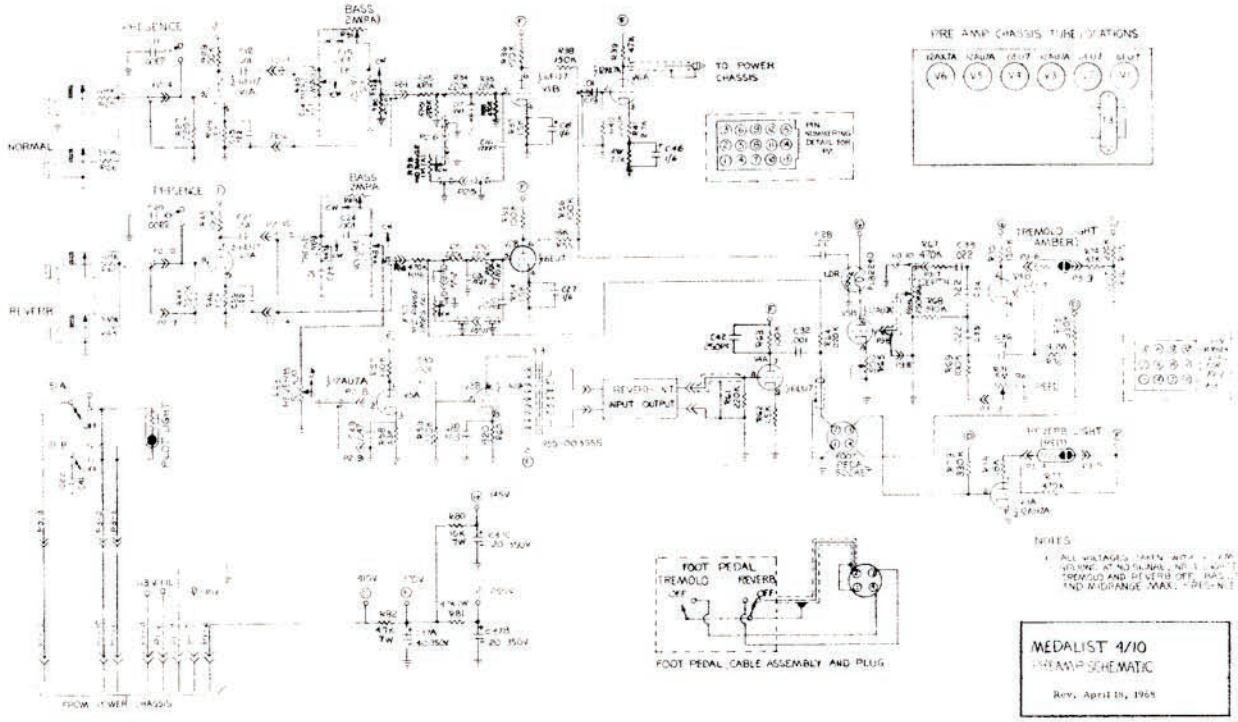

NOTES

1. ALL VOLTAGES TAKEN WITH VTVM TO GROUND AT NO SIGNAL, INPUT SHORTED, TREMOLO AND REVERB OFF, BASS, TREBLE, AND MIDRANGE MAX., PRESENCE OFF.

MEDALIST 4/10 PREAMP SCHEMATIC

Rev. April 18, 1968

DUO MEDALIST PARTS LIST

Part	Description	Schematic Reference	Part Number
CONSOLE ASSEMBLY			
Assembly	Reverb & Tremolo Footswitch		977-012789
Reverberation	Unit		984-012419
Speaker	12" 8 Ohm		985-012431
Switch	S.P.S.T. Foot		960-003574
Switch	S.P.D.T. Foot		960-010698
CONTROL PANEL ASSEMBLY			
Assembly	Pilot Light		939-011452
Jack	Phone		910-012404
Knob	Control		915-012408
Knob	On-Off Polarity		915-012451
Potentiometer	250K Special Linear Taper		925-012424
Potentiometer	2 Meg Audio Taper	VR2, 6	925-012425
Potentiometer	2 Meg Reverse Audio Taper	VR1, 5	925-012426
Potentiometer	250K Audio Taper	VR8	925-012427
Potentiometer	250K Audio Taper	VR3, 7, 10	925-012428
Potentiometer	1.5 Meg Reverse Audio Taper	VR9	925-012429
Reverb	Complete Unit		984-012419
Switch	3 Position Polarity		960-012430
PRE-AMPLIFIER ASSEMBLY			
Assembly	Photocell	P1	948-012416
Capacitor	Electrolytic 1 UF 6V		945-011469-5
Capacitor	Electrolytic 40-20-20 UF @ 350V		945-012440
Potentiometer	500Ω	VR11	925-012423
Resistor	10K 7W W.W.		924-012434-4
Transformer	Reverb	T3	955-003555
Tube	12AU7A	V3, 5	990-001291-25
Tube	6EU7	V1, 2, 4	990-003522
POWER AMPLIFIER ASSEMBLY			
Assembly	Power Amplifier Chassis		997-012441
Capacitor	Electrolytic 20-20 UF @ 500V		945-012437
Capacitor	Electrolytic 25 UF 12V		945-011469-8
Capacitor	Electrolytic 100 UF 50V		945-011469-9
Cord	A. C. Line		989-012435
Diode	Silicon	D3	919-010829
Diode	Silicon 1200V Piv	D1, 2	919-012414
Fuse	2 Amp. Slo-Blo		939-013304
Holder	Fuse		906-006303
Jack	2T		910-010878
Potentiometer	100 Ohm 2W	VR4	925-012422
Resistor	1K 7W W.W.		924-012434-1
Resistor	3K 7W W.W.		924-012434-2
Resistor	14K 15W W.W.		924-012434-3
Socket	Phone		906-003512
Transformer	Power	T1	954-003690
Transformer	Output	T2	955-011408
Tube	7591	V7, 8	990-003521
Tube	12AX7	V6	990-003570

993-012453

Printed in U.S.A.



SERVICE MANUAL

Gibson

DUO MEDALIST AMPLIFIER

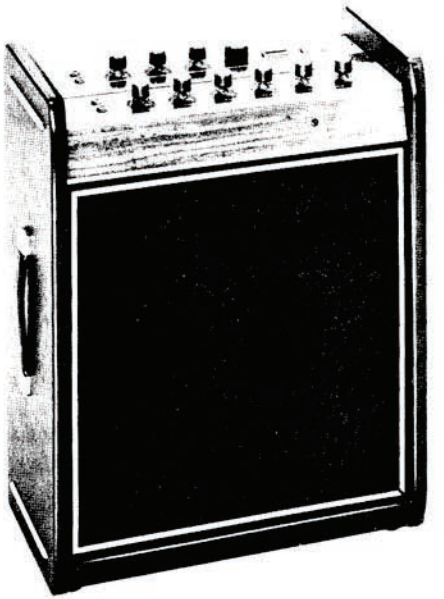

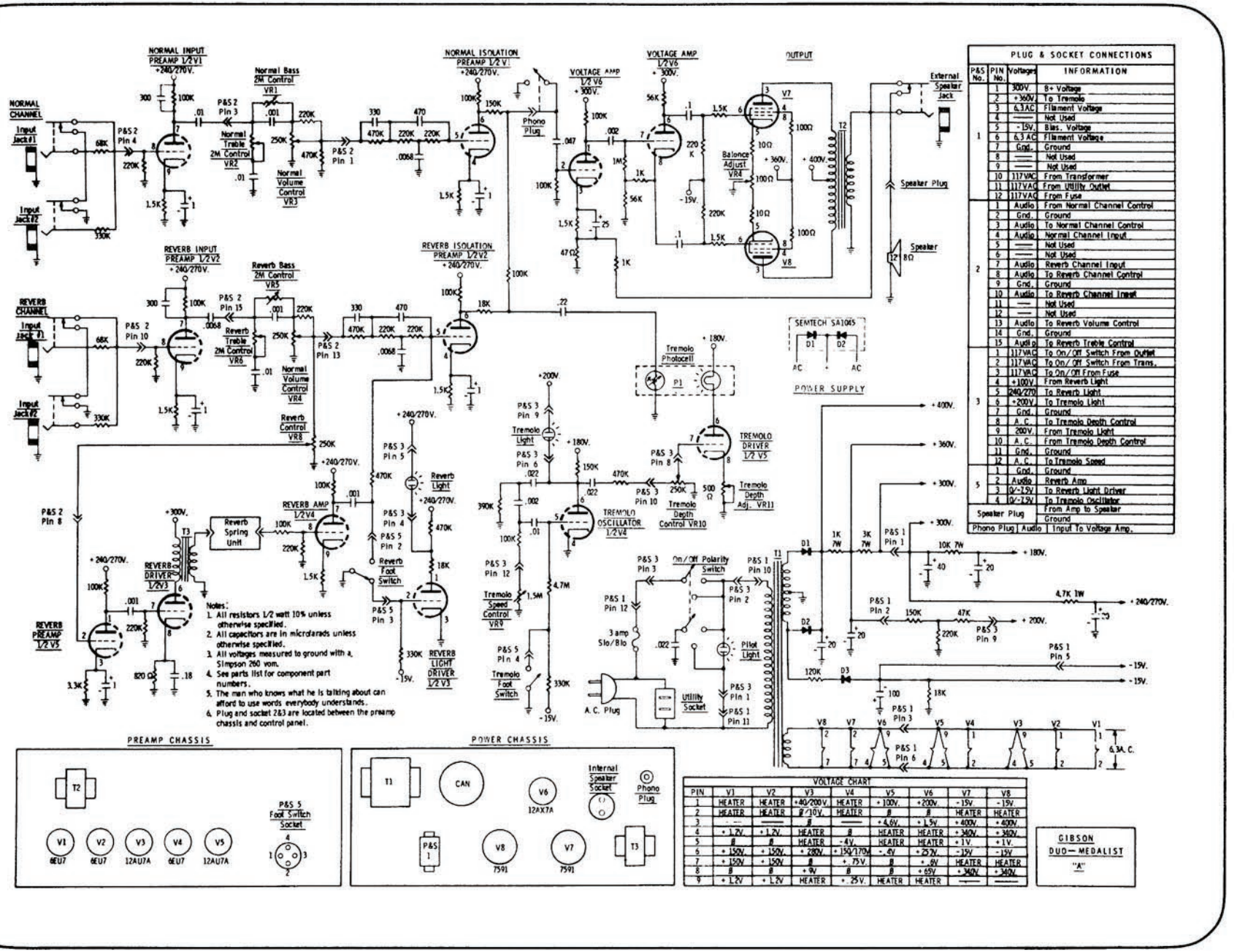

PLUG & SOCKET CONNECTIONS

P&S No.	PIN No.	Voltages	INFORMATION
1	1	300V.	B+ Voltage
	2	+360V.	To Tremolo
	3	6.3 AC	Filament Voltage
	4	——	Not Used
	5	-15V.	Bias. Voltage
	6	6.3 AC	Filament Voltage
	7	Gnd.	Ground
	8	——	Not Used
	9	——	Not Used
	10	117VAC	From Transformer
	11	117VAC	From Utility Outlet
	12	117VAC	From Fuse
2	1	Audio	From Normal Channel Control
	2	Gnd.	Ground
	3	Audio	To Normal Channel Control
	4	Audio	Normal Channel Input
	5	——	Not Used
	6	——	Not Used
	7	Audio	Reverb Channel Input
	8	Audio	To Reverb Channel Control
	9	Gnd.	Ground
	10	Audio	To Reverb Channel Input
	11	——	Not Used
	12	——	Not Used
	13	Audio	To Reverb Volume Control
	14	Gnd.	Ground
	15	Audio	To Reverb Treble Control
3	1	117VAC	To On/Off Switch From Outlet
	2	117VAC	To On/Off Switch From Trans.
	3	117VAC	To On/Off From Fuse
	4	+100V.	From Reverb Light
	5	240/270	To Reverb Light
	6	+200V.	To Tremolo Light
	7	Gnd.	Ground
	8	A.C.	To Tremolo Depth Control
	9	200V.	From Tremolo Light
	10	A.C.	From Tremolo Depth Control
	11	Gnd.	Ground
	12	A.C.	To Tremolo Speed
5	1	Gnd.	Ground
	2	Audio	Reverb Amp
	3	0V-7.5V	To Reverb Light Driver
	4	0V-7.5V	To Tremolo Oscillator
Speaker Plug			From Amp to Speaker Ground
Phono Plug	Audio		Input To Voltage Amp.

VOLTAGE CHART

PIN	V1	V2	V3	V4	V5	V6	V7	V8
1	HEATER	HEATER	+40/200 V.	HEATER	+100V.	+200V.	-15V.	-15V.
2	HEATER	HEATER	0/10V.	HEATER	0	0	HEATER	HEATER
3	——	——	0	——	+4.6V.	+1.5V.	+400V.	+400V.
4	+1.2V.	+1.2V.	HEATER	0	HEATER	HEATER	+340V.	+360V.
5	0	0	HEATER	-4V.	HEATER	HEATER	+1V.	+1V.
6	+150V.	+150V.	+280V.	+150/270V.	-.6V.	+252V.	-15V.	-15V.
7	+150V.	+150V.	0	+.75V.	0	+.6V.	HEATER	HEATER
8	0	0	+9V.	0	0	+65V.	+340V.	+340V.
9	+1.2V.	+1.2V.	HEATER	+.25V.	HEATER	HEATER	——	——

GIBSON
DUO—MEDALIST
"A"

GIBSON FALCON PARTS LIST

PART	DESCRIPTION	SCHEMATIC REFERENCE	PART NUMBER
Assembly	Reverberation Unit Complete		997-003564
Assembly	Trem/Reverb Footswitch		997-012520
Capacitor	Electrolytic 100 MFD 25V		945-011468-004
Capacitor	Elect. 40-20-20 MFD 350V		945-011469
Capacitor	Mylar .0022 MFD 400V		946-003565-222
Capacitor	Mylar .01 MFD 400V		946-003566-103
Capacitor	Mylar .047 MFD 600V		946-003567-473
Capacitor	Mylar .022 MFD 200V		946-011465-223
Capacitor	Mylar .033 MFD 200V		946-011465-333
Capacitor	Mylar 330 PF 200V		946-011490-331
Capacitor	Mylar .15 MFD 100V		946-011492-154
Capacitor	Mylar 500 PF 500V		947-002630-501
Cord	A.C. Line		989-003518
Diode	Duo SA-1045	D1, 2	919-003516
Fuse	1 Amp. 3 AG Slo-Blo		939-013304-02
Holder	Fuse		906-006303
Jack	Input (3T)	#1	910-010078
Jack	Input (2T)	#2	910-010878
Knob	Control		915-011459
Plug	4 Pin	P&S1	910-003576
Plug	Phono		910-003589
Potentiometer	500K Reverb (A)	VR9	925-003562
Potentiometer	1 Meg Tremolo Depth (RA)	VR7	925-012428
Potentiometer	1 Meg Volume (SP. L)	VR3, 6	925-012507
Potentiometer	5 Meg Bass (RA)	VR2, 5	925-012508
Potentiometer	1 Meg Treble (A)	VR1, 4	925-012509
Potentiometer	500K Trem. Freq./Switch (RA)	VR8	925-012510
Shell	4 Pin Plug	P&S1	976-003577
Socket	Footswitch		906-003575
Socket	9 Pin Wafer Tube		906-005797
Socket	9 Pin Bakelite Tube		906-006498
Speaker	12″		985-012512
Switch	Reverb & Tremolo Foot		960-003574
Transformer	Power TF-113-B-P	T1	954-011407
Transformer	Reverb Driver	T2	955-003555
Transformer	Output TF-508-O	T3	955-003694
Transistor	Tremolo Driver	Q1	991-008393
Tube	6BQ5	V5, 6	990-003570
Tube	12AX7	V1-4	990-003571



SERVICE MANUAL

Gibson

FALCON AMPLIFIER



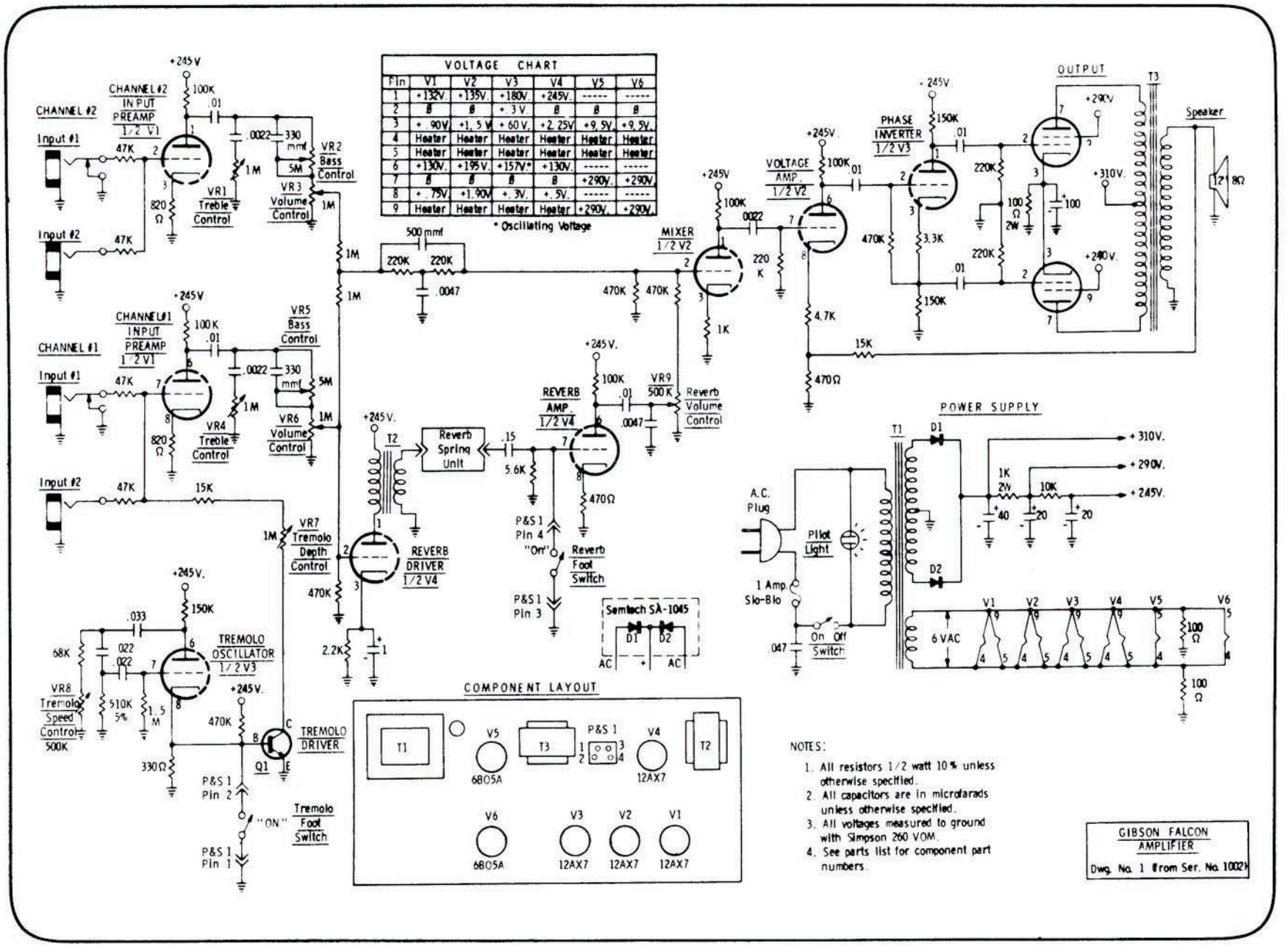
VOLTAGE CHART
Pin V1 V2 V3 V4 V5 V6
1 +132V. +135V. +180V. +245V. ----- -----
2 0 0 + 3V 0 0 0
3 + .90V. +1.5V. + 60V. +2.25V. +9.5V. +9.5V.
4 Heater Heater Heater Heater Heater Heater
5 Heater Heater Heater Heater Heater Heater
6 +130V. +195V. +157V* +130V. ----- -----
7 0 0 0 0 +290V. +290V.
8 + .75V. +1.90V. + .3V. + .5V. ----- -----
9 Heater Heater Heater Heater +290V. +290V.
* Oscillating Voltage
CHANNEL #2 INPUT PREAMP 1/2 V1
CHANNEL #1 INPUT PREAMP 1/2 V1
Input #1
Input #2
VR1 Treble Control
VR2 Bass Control
VR3 Volume Control
VR4 Treble Control
VR5 Bass Control
VR6 Volume Control
VR7 Tremolo Depth Control
VR8 Tremolo Speed Control 500K
VR9 500K Reverb Volume Control
MIXER 1/2 V2
VOLTAGE AMP. 1/2 V2
PHASE INVERTER 1/2 V3
OUTPUT
Speaker
Reverb Spring Unit
REVERB AMP. 1/2 V4
REVERB DRIVER 1/2 V4
TREMOLO OSCILLATOR 1/2 V3
TREMOLO DRIVER
Q1
Reverb Foot Switch
Tremolo Foot Switch
"ON"
P&S 1 Pin 1
P&S 1 Pin 2
P&S 1 Pin 3
P&S 1 Pin 4
"On"
Semtech SA-1045
POWER SUPPLY
A.C. Plug
Pilot Light
1 Amp. Slo-Blo
On Off Switch
6 VAC
COMPONENT LAYOUT
T1
T2
T3
V5 6BQ5A
V4 12AX7
V6 6BQ5A
V3 12AX7
V2 12AX7
V1 12AX7
NOTES:
1. All resistors 1/2 watt 10% unless otherwise specified.
2. All capacitors are in microfarads unless otherwise specified.
3. All voltages measured to ground with Simpson 260 VOM.
4. See parts list for component part numbers.
GIBSON FALCON AMPLIFIER
Dwg. No. 1 (from Ser. No. 10021)

GIBSON HAWK PARTS LIST

PART	DESCRIPTION	SCHEMATIC REFERENCE	PART NUMBER
Assembly	Reverberation Unit Complete		997-003564
Assembly	Reverb Tremolo Footswitch		997-012520
Capacitor	Electrolytic 1 MFD 6VDC		945-011468-1
Capacitor	Electrolytic 10 MFD 15 VDC		945-011468-2
Capacitor	Electrolytic 5 MFD 6VDC		945-011468-3
Capacitor	Electrolytic 100 MFD 25V		945-011468-4
Capacitor	Elect. 40-20-20 MFD 350V		945-011469
Capacitor	Mylar .001 MFD 400 VDC		946-003566-102
Capacitor	Mylar .01 MFD 400V		946-003566-103
Capacitor	Mylar .0047 MFD 400 VDC		946-003566-472
Capacitor	Mylar .047 MFD 600V		946-003567-473
Capacitor	Mylar .1 MFD 100 VDC		946-011463-104
Capacitor	Mylar .2 MFD 100 VDC		946-011463-204
Capacitor	Mylar .022 MFD 200V		946-011465-223
Capacitor	Mylar .033 MFD 200V		946-011465-333
Capacitor	Mylar .0047 MFD 200V		946-011466-472
Capacitor	Mylar 330 PF 200V		946-011490-331
Cord	A. C. Line		989-003518
Diode	Duo SA-1045	D1, 2	919-003516
Fuse	1 Amp. 3 AG Slo-Blo		939-013304-2
Holder	Fuse		906-006303
Jack	Input (3T)	#1	910-010078
Jack	Input (2T)	#2	910-010878
Knob	Control		915-011459
Pilot Light			939-003533-1
Plug	Phono		910-003589
Plug	4 Prong	P&S1	910-003576
Potentiometer	500K Reverb Control (A)	VR3	925-003562
Potentiometer	1 Meg Tone Cont. Switch (A)	VR1	925-011461
Potentiometer	1 Meg Volume Control (SP.L)	VR2	925-011460
Potentiometer	500K Tremolo Control (RA)	VR4	925-011462
Shell	4 Prong Plug	P&S1	976-003577
Socket	Footswitch		906-003575
Socket	9 Pin Wafer Tube		906-005797
Socket	9 Pin Bakelite Tube		906-006498
Speaker	10″		985-003563
Switch	Reverb & Tremolo Foot		960-003574
Transformer	Reverb Driver	T2	955-003555
Transformer	Output TF-508-0	T3	955-003694
Transformer	Power TF-113-B-P	T1	990-003570
Tube	6BQ5	V4, 5	954-011407
Tube	12AX7	V1-3	990-003571



SERVICE MANUAL

Gibson

HAWK AMPLIFIER

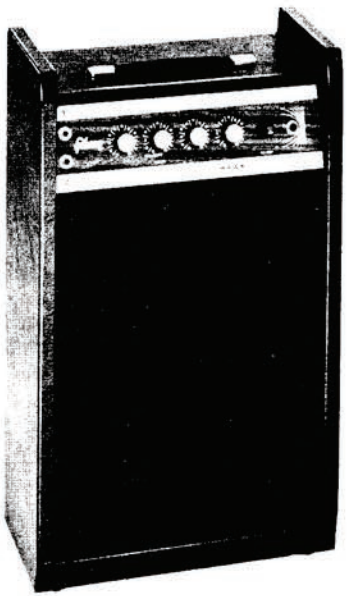

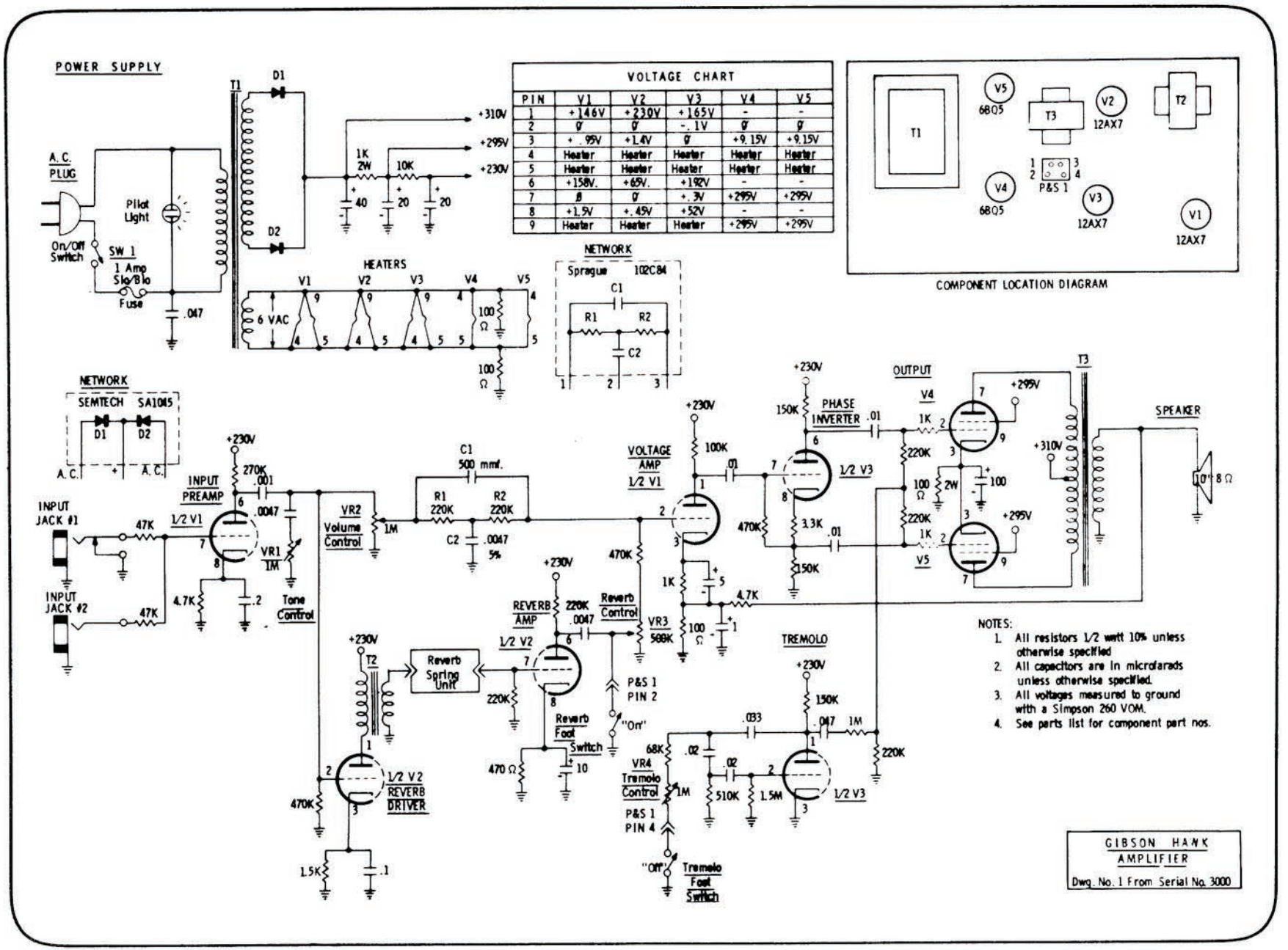

VOLTAGE CHART					
PIN	V1	V2	V3	V4	V5
1	+146V	+230V	+165V	-	-
2	0	0	-.1V	0	0
3	+.95V	+1.4V	0	+9.15V	+9.15V
4	Heater	Heater	Heater	Heater	Heater
5	Heater	Heater	Heater	Heater	Heater
6	+158V.	+65V.	+192V	-	-
7	0	0	+.3V	+295V	+295V
8	+1.5V	+.45V	+52V	-	-
9	Heater	Heater	Heater	+295V	+295V

COMPONENT LOCATION DIAGRAM

NOTES:
1. All resistors 1/2 watt 10% unless otherwise specified
2. All capacitors are in microfarads unless otherwise specified.
3. All voltages measured to ground with a Simpson 260 VOM.
4. See parts list for component part nos.

GIBSON HANK AMPLIFIER
Dwg. No. 1 From Serial No. 3000

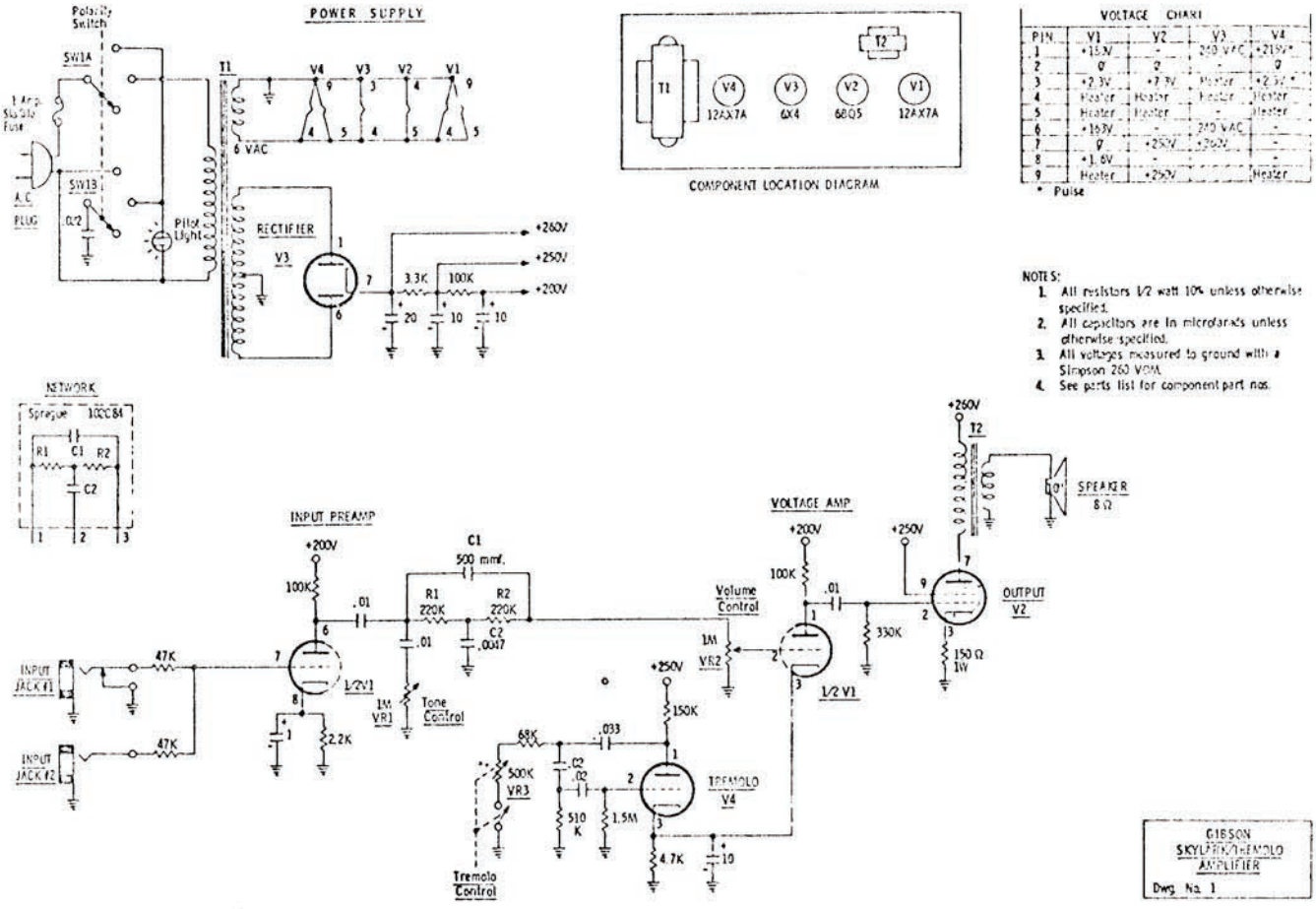

COMPONENT LOCATION DIAGRAM

VOLTAGE CHART

PIN	V1	V2	V3	V4
1	+15V	-	240 VAC	+215V*
2	0	0	-	0
3	+2.3V	+7.7V	Heater	+2.3V*
4	Heater	Heater	Heater	Heater
5	Heater	Heater	Heater	Heater
6	+165V	-	240 VAC	-
7	0	+250V	+260V	-
8	+1.6V	-	-	-
9	Heater	+250V	-	Heater

* Pulse

NOTES:

1. All resistors 1/2 watt 10% unless otherwise specified.
2. All capacitors are in microfarads unless otherwise specified.
3. All voltages measured to ground with a Simpson 260 VOM.
4. See parts list for component part nos.

GIBSON SKYLARK TREMOLO AMPLIFIER
Dwg. No. 1

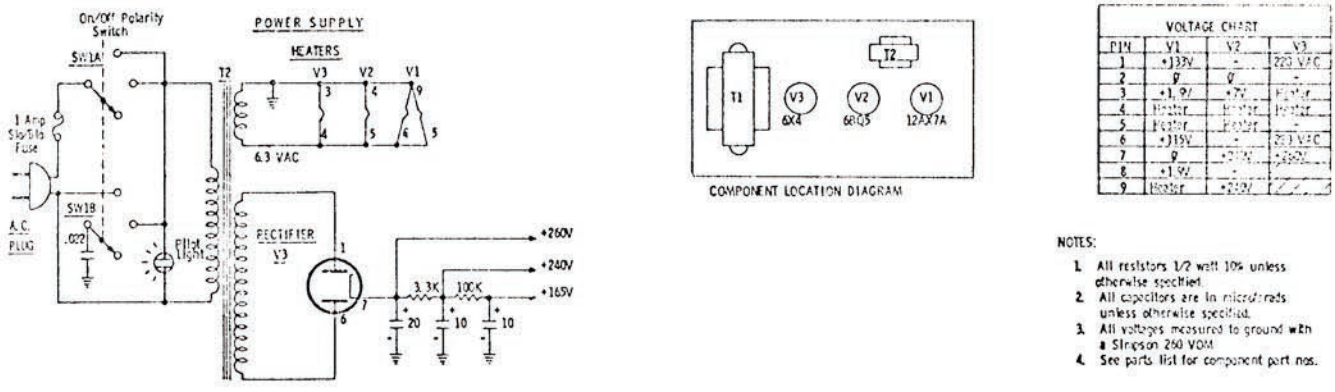

COMPONENT LOCATION DIAGRAM

VOLTAGE CHART

PIN	V1	V2	V3
1	+133V	-	220 VAC
2	0	0	-
3	+1.9V	+7V	Heater
4	Heater	Heater	Heater
5	Heater	Heater	-
6	+135V	-	220 VAC
7	0	+215V	+230V
8	+1.9V	-	-
9	Heater	+215V	-

NOTES:

1. All resistors 1/2 watt 10% unless otherwise specified.
2. All capacitors are in microfarads unless otherwise specified.
3. All voltages measured to ground with a Simpson 260 VOM.
4. See parts list for component part nos.

GIBSON SKYLARK AMPLIFIER
Dwg. No. 1

GIBSON SKYLARK T AMPLIFIER

PARTS LIST

PART	DESCRIPTION	SCHEMATIC REFERENCE	PART NUMBER
CHASSIS ASSEMBLY			
Chassis	Assembly		7510
Overlay	Chassis Face		CHP-162
Transformer	Power	T1	TF-1028
Transformer	Output (With Speaker Connections)	T2	TF-500-01
Tube	Input Preamp, Voltage Amp & Tremolo	V1 & V4	TU-12AX7A
Tube	Output	V2	TU-6BQ5
Tube	Rectifier	V3	TU-6X4
Socket	Tube - 9 pin		TUS-203
Socket	Tube - 7 pin		TUS-204
Fuse	1 Amp 3 AG, Slo-Blo		FU-312001
Fuse Post	Assembly		FU-342012
Light	Pilot		PL-33R
Switch	3 Position Polarity	SW1A,SW1B	SW-899-1
Cord	10 Feet		CRD-SPT-2
Jack	Input	#2	J-11
Jack	Input	#1	J-12A
Control	1 Meg Audio	VR1	CBA-811-3709-1
Control	1 Meg Linear	VR2	CBA-4016
Control	500K RA W/SPST Switch	VR3	CBA-4017
Knob	Control		K-910
Network	Notch Filter		FEC-1005
Capacitor	1 Mfd., 6V, 85°C		CD-9E-1-6
Capacitor	20-10-10- Mfd., 450V., 80°C		CD-F-1008
CASE ASSEMBLY			
Case	Complete		WCCA-83-2
Speaker	10" 8 Ohm		S-20008
INSTRUCTIONS			
Manual	Literature		TUL-4037

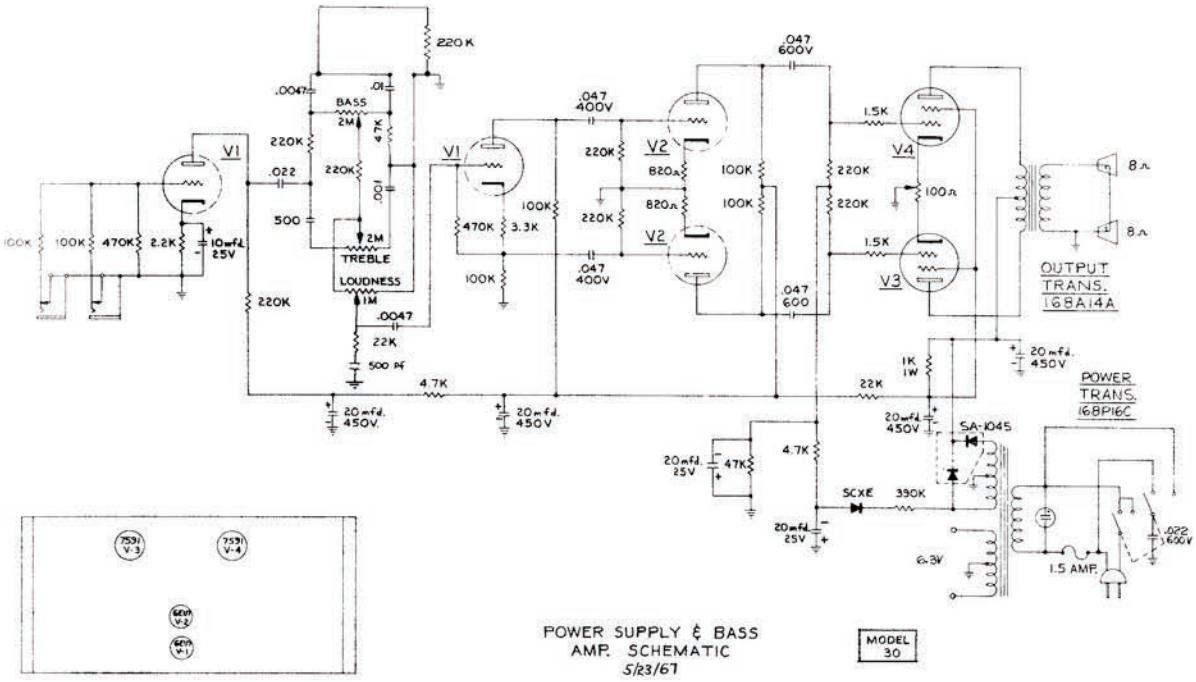

POWER SUPPLY & BASS AMP. SCHEMATIC
5/23/67

MODEL 30

TUBE LOCATION CHART
KALAMAZOO BASS AMP.

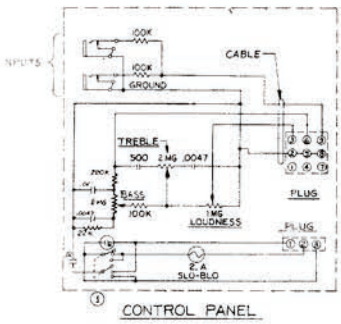

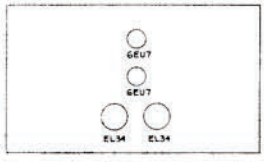

TUBE LOCATION CHART

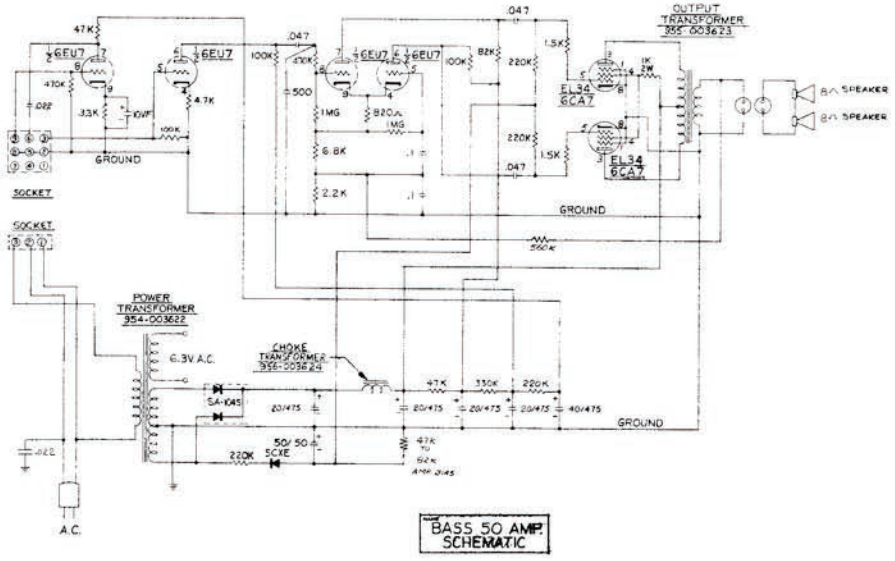

BASS 50 AMP. SCHEMATIC

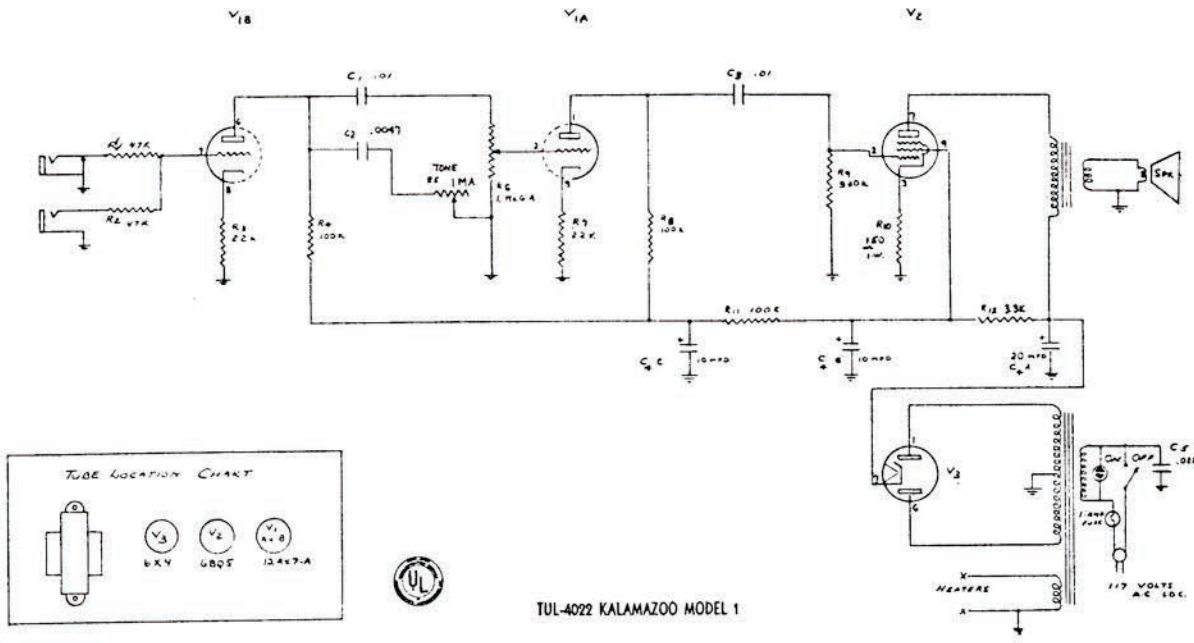

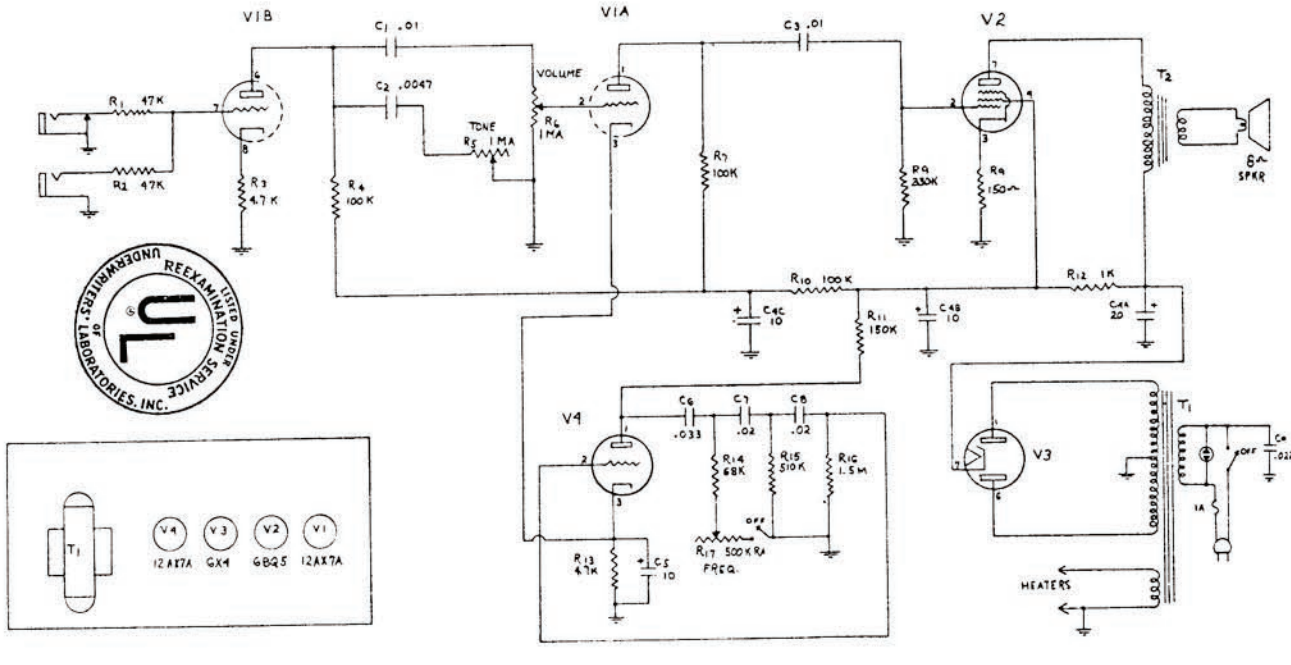

KALAMAZOO MODEL 2

EPIPHONE

EMPEROR

MODELS
EA-4T, EA-4TL AND EA-6T
AMPLIFIERS

INSTRUCTIONS

EPIPHONE Inc., KALAMAZOO, MICHIGAN

UNPACKING

Amplifiers are carefully packed to prevent damage in shipment. However, upon receipt of the amplifier, examine carefully to determine if there has been breakage of tubes or parts. If damage has occurred during shipment, call the Transportation Company immediately, and place a claim.

CAUTION

Damage to the amplifier will result if it is connected to an improper power source. This amplifier is designed to be operated on 105-125 volt, 50-60 cycle alternating current only. The voltage from the power lines should not exceed 125, and the frequency of the current should be either 50 or 60 cycles. When ready to use amplifier, insert the plug on the power cord into the electric outlet and move switch to "on." After approximately one minute for the tubes to heat, the amplifier is ready for use.

SET UP INSTRUCTIONS

A set of 4 heavy duty casters are furnished with this amplifier for ease of moving it from one place to another. They are detached from the amplifier at time of shipment and are taped to the amplifier cabinet in a brown vinyl bag. They can be easily attached or detached as needed. When playing this amplifier at relatively high power output it is suggested the casters be removed to eliminate the possibility of synthetic vibrations or rattles.

The Piggy Back amplifier may be played on or off the speaker cabinet. When playing it on the speaker cabinet be sure it is fastened securely by the locking fixtures provided.

SPEAKER CORD CONNECTION

The speaker cord is packed with the A. C. supply cord. One end must be plugged into the speaker jack located on the speaker cabinet back panel and the other end should be plugged into the speaker jack located on the back of the amplifier chassis.

A.C. POWER-POLARITY SWITCH

A convenient switch has been provided for performing a total of three functions, turning the amplifier on and off, putting the amplifier in "Standby" and selecting the proper polarity of the power source which reduces the A.C. hum and other extraneous noises to a minimum. In the "Standby" position the amplifier is kept "warmed up" and ready to play at the instant the switch is advanced to the "On" positions. Two "On" positions have been provided. The hum and hiss level on one of the "On" positions will be noticeably lower — this is the correct "Polarity" for using the amplifier.

In locations of extremely high noise levels, clipping the "Ground Clip" to a grounded object will greatly reduce objectionable noise and hum.

As an added convenience to the artist this amplifier is equipped with a "Standby pilot light" as well as the "Regular pilot light". When the "Amber" light is on, the amplifier is in "Standby"; when the "Red" light is on the amplifier is "On" and ready to play.

OPERATION OF MICROPHONE

The high gain and characteristics of this amplifier, permit the use of most of the popular high impedance microphones for public address work.

TILT LEG

This amplifier is equipped with a "Tilt Leg" which allows the artist to change the angle of sound dispersion. See Figure 1.

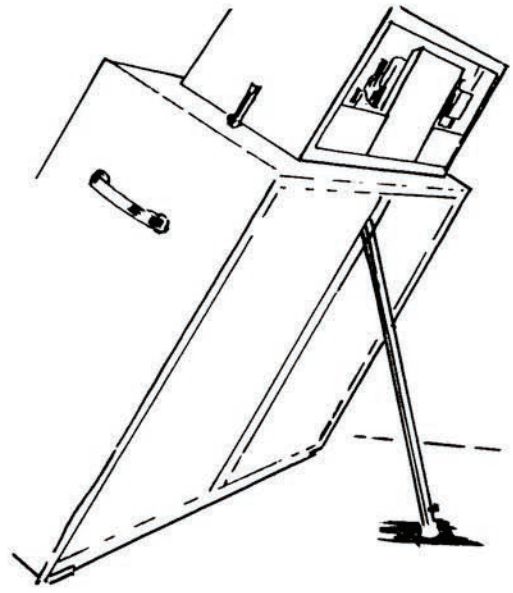

FIGURE 1.

TREMOLO — EFFECTIVE IN CHANNEL 2 ONLY

The Tremolo effect is turned on and off by means of a Push Type Foot Switch. The Tremolo frequency of the Amplifier is controlled by the Variable Control marked "Frequency." The speeds have been carefully set to cover a wide range of Tremolo effects. The depth of the Tremolo is also variable being controlled by the "Depth" Control.

TWO CHANNELS

The Pre-Amplifier is divided into separate channels with two input jacks in each channel. Each channel has an independent set of volume, treble and bass voicing controls.

Complete isolation is provided between the two channels so that entirely different settings of tone and volume controls can be used without inter-action. This permits two different styles in any combination — microphone, electric jazz guitar, rhythm guitar, bass or accordion — to be played at the same time with correct tone and volume settings for each instrument.

EA-4T, 4TL, & 6T

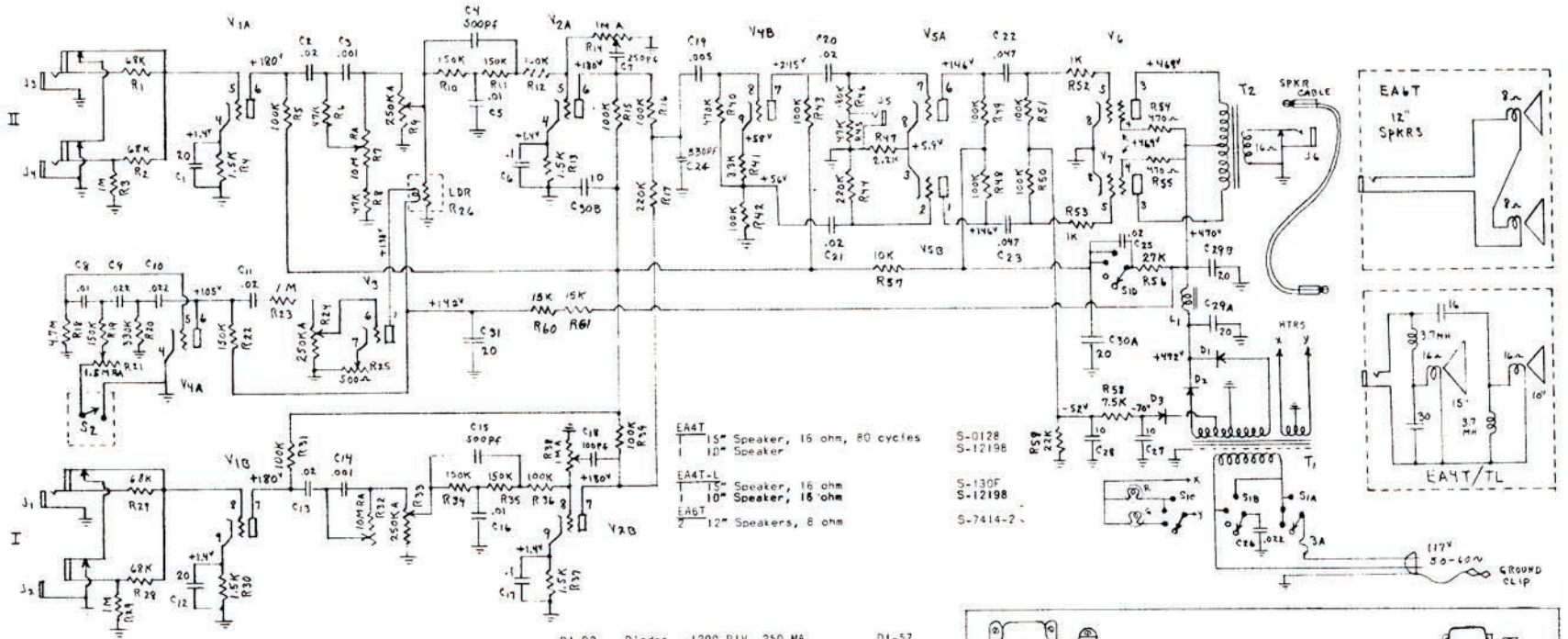

R7	Bass Tone Control, 10 meg. Reversed Audio	C-BA-811-3710	D1,D2	Diodes - 1200 PIV, 250 MA	D1-57
R9	Volume Control, 250K Audio Taper	C-BA-811-3701	D3	Diode - 600 PIV, 250 MA	D1-71B
R14	Treble Tone Control, 1 meg. Audio Taper	C-BA-811-3709	T1	Power Transformer	TF-77P-S
R21	Tremolo Frequency Control, 15meg. Reversed Audio	C-BA-811-3705	T2	Output Transformer	TF-300-01
R24	Tremolo Depth Control, 250K Audio Taper	C-BA-811-3701			
R25	LDR Gain Control, 500 ohm/200 ohm min.	C-B-23391	L1	Filter Choke	TF-3021H
R32	Bass Tone Control, 10 meg. Reversed Audio	C-BA-811-3710			
R33	Volume Control, 250K Audio Taper	C-BA-811-3701			
R38	Treble Tone Control, 1 meg. Audio Taper	C-BA-811-3709	S1	Switch, Power, Standby, Polarity	SW-78
			S2	Switch, Tremolo	
R26	Light Dependent Resistor Lamp Assembly	RE-LDR-430G			

FUSE

The fuse used in this Amplifier is a type 3AG of three amperes rating.

DO NOT USE FUSES OF HIGHER RATING

SERVICE

If the amplifier is in need of servicing, it should be taken to a reliable radio man. The electrical diagram in this folder should be shown the repairman to assist him in servicing the amplifier.

EPIPHONE

EMPEROR

MODEL EA-5 RVT AMPLIFIER

INSTRUCTIONS

EPIPHONE Inc., KALAMAZOO, MICHIGAN

REVERB UNIT UNPACKING INSTRUCTIONS

IMPORTANT — READ CAREFULLY BEFORE USE

CAUTION

The Reverb Unit has been carefully constructed. It is, however, a delicate electronic device. Treat it with the same care and respect given a TV set.

Avoid dropping, sudden jolts, or rough handling and it will give excellent service. This beautifully musical Reverberation effect is not to be confused with the repeating signal produced by the mechanical tape recorder style of echo units.

UNPACKING

Amplifiers are carefully packed to prevent damage in shipment. However, upon receipt of the amplifier, examine carefully to determine if there has been breakage of tubes or parts. If damage has occurred during shipment, call the Transportation Company immediately, and place a claim.

TUBES

Make certain all tubes are seated firmly into their respective sockets. Each tube is labeled for proper replacement should any tube be out of its socket. Be especially careful when inserting tubes to see that the pins on the tube are correctly aligned with the holes in the socket before pushing into place. Do not twist tube — push tube straight into socket. It is advisable to check tubes from time to time depending on amount of use and excellence of performance. *Be sure tubes are always returned to proper sockets and seated firmly.*

REVERB POWER UNIT SET UP INSTRUCTIONS

CAUTION

Damage to the amplifier will result if it is connected to an improper power source. This amplifier is designed to be operated on 105-125 volt, 50-60 cycle alternating current only. The voltage from the power lines should not exceed 125, and the frequency of the current should be either 50 or 60 cycles. When ready to use power, insert the plug on the power cord into the electric outlet and move switch to "on." After approximately one minute for the tubes to heat, the amplifier is ready for use.

The Reverberation Unit must always be placed on a solid non-vibrating surface or footing when in operation.

Any sudden shock, jolt, or wiggle, when in use, will cause undesirable noise. The resultant clatter of an inadvertant shake or bump is annoying but not necessarily harmful. This delicate sensitivity to shock and vibration is a normal characteristic of the device.

No problem will be encountered while the unit is connected if supporting surface is solid and unit is not moved about. To avoid the unwanted noise, turn the reverberation unit off by pressing the foot switch.

OPERATION OF MICROPHONE

The high gain and high fidelity characteristics of this Amplifier, permit the use of most of the popular high impedance microphones for public address work. The microphone should be plugged into the Number One Jack of Channel 1.

If the Microphone jacks are not in use, turn the Channel one Loudness control completely off.

REVERBERATION — EFFECTIVE IN CHANNEL 2 ONLY

Due to the unusual flexibility of the Reverberation circuit, it is important that the Operator understands the various control settings to obtain the total range of Reverberation effects of which this Amplifier is capable. Illustrated below are several examples of control settings which will reproduce different Reverberation effects.

Loudness 2 Bass Treble Reverberation Depth Frequency

Example No. 1. 50% Main Signal - 50% Reverb.

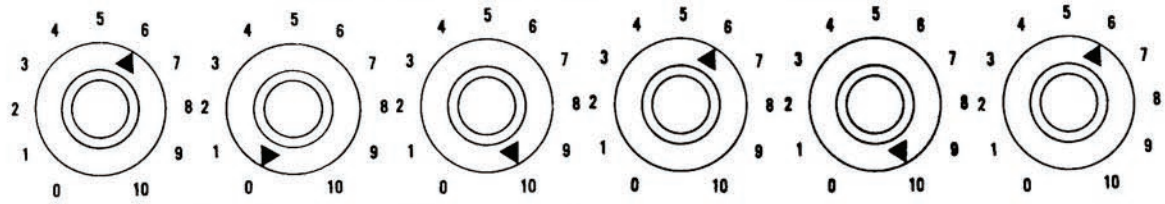

INSTRUMENT SETTINGS — Tone control and/or toggle switch in maximum treble position. Volume control setting 2½ to 3.

Example No. 2. 75% Main Signal - 25% Reverb.

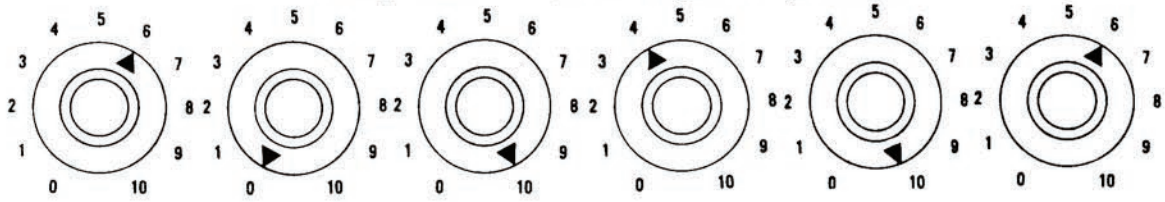

INSTRUMENT SETTINGS — Tone control same as above, Volume control setting 5 to 6.

Example No. 3. 25% Main Signal - 75% Reverb.

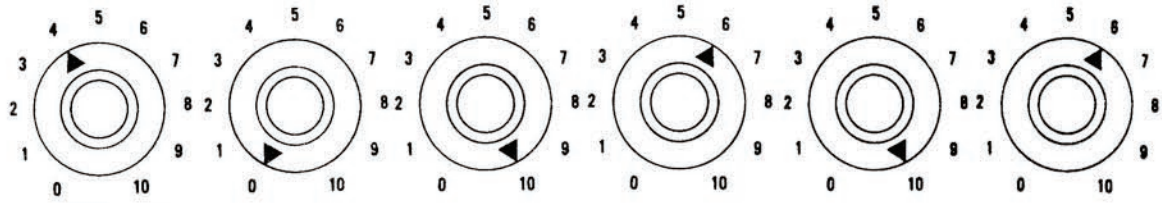

INSTRUMENT SETTINGS — Same as Example No. 2.

Example No. 4. 100% Reverb.

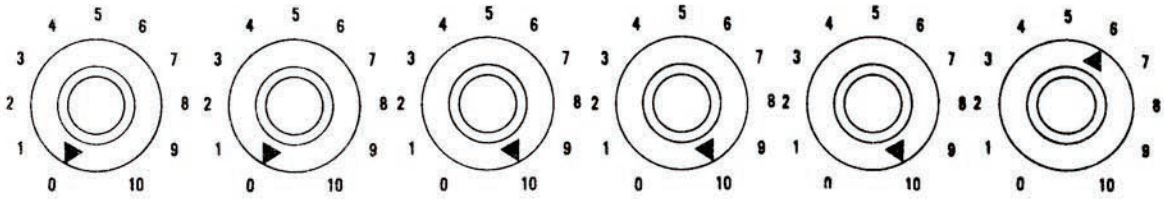

INSTRUMENT SETTINGS — Same as Example No. 2.

FOOT SWITCH MUST BE IN THE "ON" POSITION FOR REVERBERATION.

CONTROL LOCATIONS

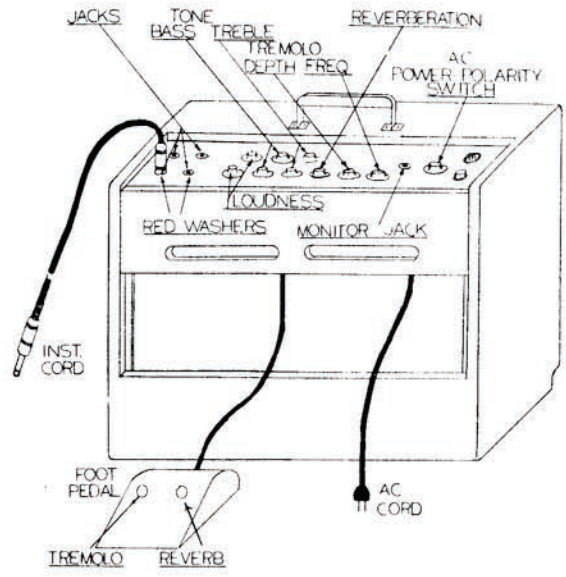

OPERATIONAL INSTRUCTIONS FOR USE OF THIS REVERBERATION AMPLIFIER IN CONJUNCTION WITH A REGULAR AMPLIFIER

The use of this Reverberation Amplifier with a Regular Amplifier will add a spacious liveliness to instrument reproduction that is far beyond the possibilities of single amplifier Reverberation. Listed below are the simple instructions for this type of operation.

1. Plug the A.C. cord of this Reverberation Amplifier into a convenient outlet.
2. Now plug one end of a shielded jumper cord into the No. 1 Jack of Channel 2 (the one with the Red Washer) Plug the other end of the jumper cord into the input jack normally used in a regular amplifier. Set regular amplifier for normal volume.
3. The Guitar instrument cord should be plugged into the No. 2 Jack of Channel 2 of this Reverberation Amplifier. Plug the A.C. line cord of the Regular Amplifier into a convenient outlet.
4. Turn on the A.C. switches for both amplifiers and the tone controls may be set as illustrated on page 2.
5. If both Reverb. and Normal Signals are to be heard at the regular Amplifier, plug the Shielded Jumper Cord into the Monitor Jack of this Reverberation Amplifier instead of the Jack with the Red Washer.

Illustrated below is a pictorial diagram showing the correct hook-up.

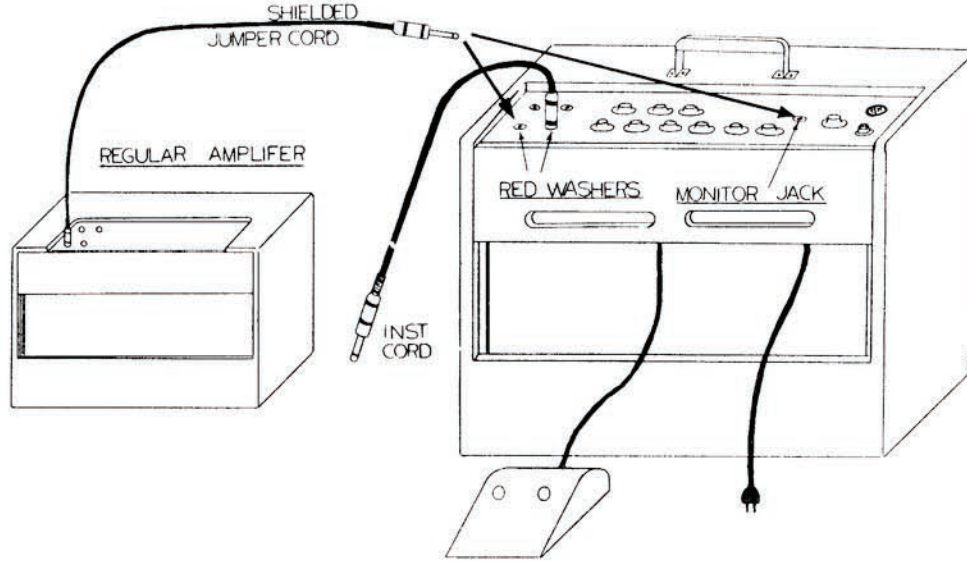

6. Place the combination reverberation, tremolo foot control switch in a convenient position and the system is ready to operate. Either, or both, reverberation and tremolo effect is available by switching the indicated switch ON or OFF.
7. The percentage of Reverberation can be controlled by the Reverberation Control, Channel 2 Loudness Control and the Volume Control of the Regular Amplifier.
8. The instrument is ready to be played. If reverb signal is not coming through, step on the foot switch as it may be in the OFF position. Thereafter, the reverb effect can be conveniently cut in or out at a snap of the foot switch.
9 When the Reverberation Foot Switch is OFF, the reverb unit operates as a regular amplifier adding an extra self-powered speaker that expands the regular amplifier sound without reverberation. If a cord length space separates the regular amplifier and the reverberation unit, an excellent impression of the "Stereo" and echo effect is obtained.
When Reverberation Foot Switch is ON, the reverb signal is super-imposed on the above "Stereo" sound with a minimum contrast of volume change.

TREMOLO — EFFECTIVE IN CHANNEL 2 ONLY

The Tremolo effect adds another dimension to the Reverberation effect. It can be used either with or without reverberation at the players discretion. The Tremolo is turned on or off by the use of the foot switch. The Tremolo Frequency Range has been carefully set to cover a wide range of Tremolo effects. The Depth of the Tremolo is also variable being controlled by the Depth control.

A.C. POWER-POLARITY SWITCH

A convenient switch has been provided for performing a total of three functions, turning the amplifier on and off, putting the amplifier in "Standby" and selecting the proper polarity of the power source which reduces the A.C. hum and other extraneous noises to a minimum. In the "Standby" position the amplifier is kept "warmed up" and ready to play at the instant the switch is advanced to the "On" positions. Two "On" positions have been provided. The hum and hiss level on one of the "On" positions will be noticeably lower — this is the correct "Polarity" for using the amplifier.

In locations of extremely high noise levels, clipping the "Ground Clip" to a grounded object will greatly reduce objectionable noise and hum.

FUSE

The fuse used in this Amplifier is a type 3AG of three amperes rating. DO NOT USE FUSES OF HIGHER RATING

SERVICE

If the amplifier is in need of servicing, it should be taken to a reliable radio man. The electrical diagram in this folder should be shown the repairman to assist him in servicing the amplifier.

EA-5RVT

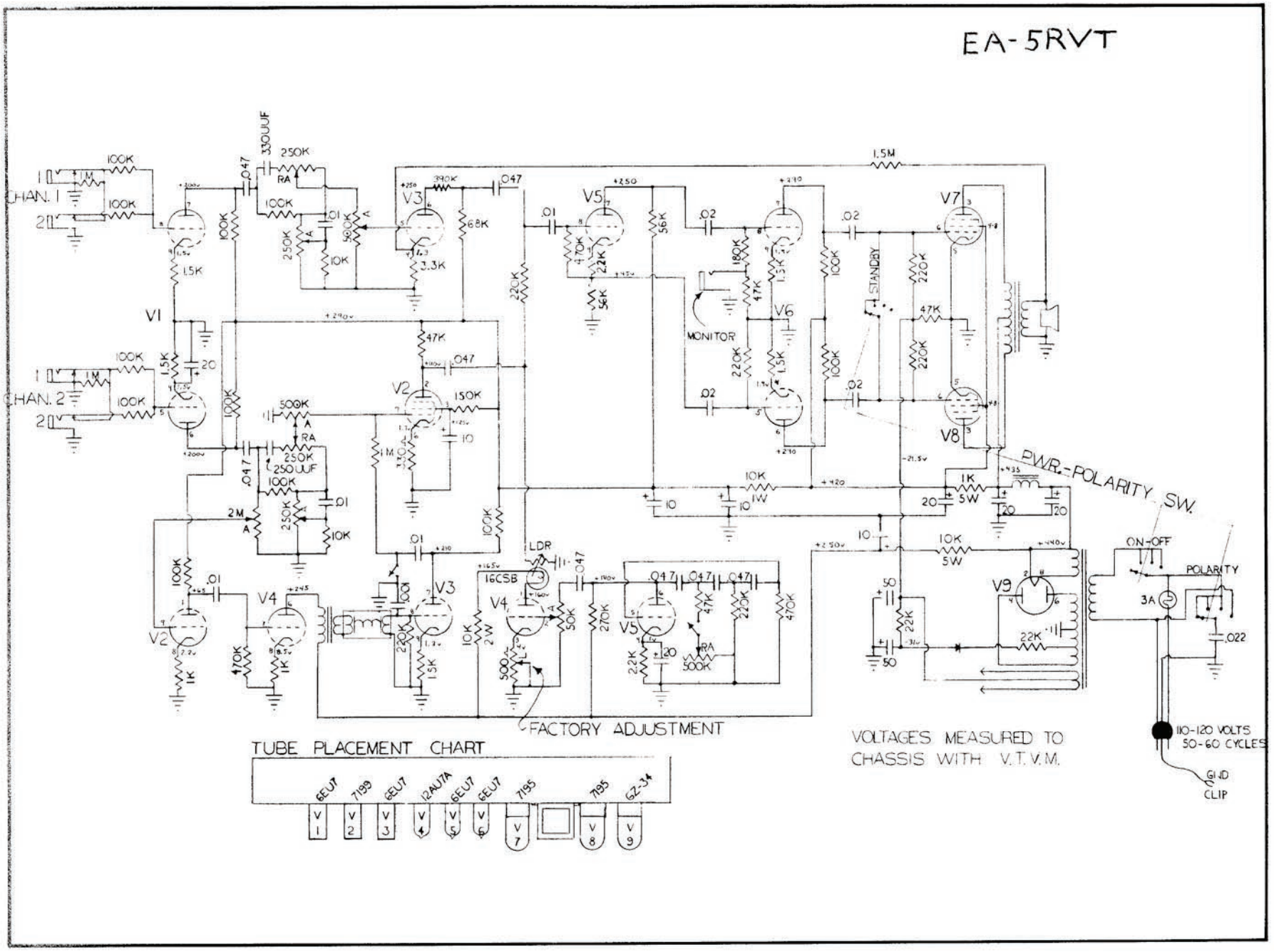
CHAN. 1
CHAN. 2
V1
V2
V3
V4
V5
V6
V7
V8
V9
MONITOR
STANDBY
PWR.-POLARITY SW.
ON-OFF
POLARITY
3A
LDR
16CSB
FACTORY ADJUSTMENT
TUBE PLACEMENT CHART
6EU7
7199
6EU7
12AU7A
6EU7
6EU7
7195
7195
GZ-34
V 1
V 2
V 3
V 4
V 5
V 6
V 7
V 8
V 9
VOLTAGES MEASURED TO CHASSIS WITH V.T.V.M.
110-120 VOLTS 50-60 CYCLES
GND CLIP

EPIPHONE

THE PROFESSIONAL
MODEL EA-7P OUTFIT

INSTRUCTIONS

EPIPHONE Inc., KALAMAZOO, MICHIGAN

REVERB UNIT UNPACKING INSTRUCTIONS

IMPORTANT — READ CAREFULLY BEFORE USE

CAUTION

The Reverb Unit has been carefully constructed. It is, however, a delicate electronic device. Treat it with the same care and respect given a TV set.

Avoid dropping, sudden jolts, or rough handling and it will give excellent service. This beautifully musical Reverberation effect is not to be confused with the repeating signal produced by the mechanical tape recorder style of echo units.

UNPACKING

Amplifiers are carefully packed to prevent damage in shipment. However, upon receipt of the amplifier, examine carefully to determine if there has been breakage of tubes or parts. If damage has occurred during shipment, call the Transportation Company immediately, and place a claim.

TUBES

Make certain all tubes are seated firmly into their respective sockets. Each tube is labeled for proper replacement should any tube be out of its socket. Be especially careful when inserting tubes to see that the pins on the tube are correctly aligned with the holes in the socket before pushing into place. Do not twist tube — push tube straight into socket. It is advisable to check tubes from time to time depending on amount of use and excellence of performance. *Be sure tubes are always returned to proper sockets and seated firmly.*

REVERB POWER UNIT SET UP INSTRUCTIONS

CAUTION

Damage to the amplifier will result if it is connected to an improper power source. This amplifier is designed to be operated on 105-125 volt, 50-60 cycle alternating current only. The voltage from the power lines should not exceed 125, and the frequency of the current should be either 50 or 60 cycles. When ready to use power, insert the plug on the power cord into the electric outlet and move switch to "on." After approximately one minute for the tubes to heat, the amplifier is ready for use.

The Reverberation Unit must always be placed on a solid non-vibrating surface or footing when in operation.

Any sudden shock, jolt, or wiggle, when in use, will cause undesirable noise. The resultant clatter of an inadvertant shake or bump is annoying but not necessarily harmful. This delicate sensitivity to shock and vibration is a normal characteristic of the device.

No problem will be encountered while the unit is connected if supporting surface is solid and unit is not moved about. To avoid the unwanted noise, turn the reverberation unit off by pressing the foot switch.

FUSE

The fuse used in this Amplifier is a type 3AG of two ampere rating. DO NOT USE FUSES OF HIGHER RATING

SERVICE

If the amplifier is in need of servicing, it should be taken to a reliable radio man. The electrical diagram in this folder should be shown the repairman to assist him in servicing the amplifier.

AMPLIFIER
CONTROL LOCATIONS

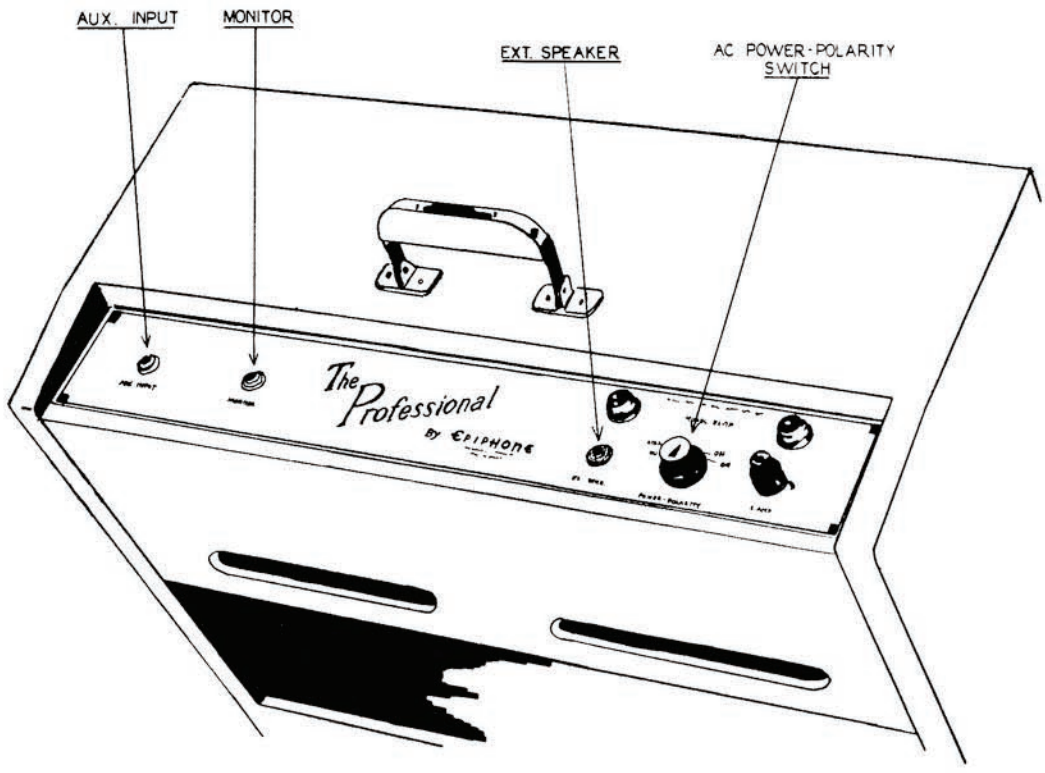

A.C. POWER-POLARITY SWITCH

A convenient switch has been provided for performing a total of three functions, turning the amplifier on and off, putting the amplifier in "Standby" and selecting the proper polarity of the power source which reduces the A.C. hum and other extraneous noises to a minimum. In the "Standby" position the amplifier is kept "warmed up" and ready to play at the instant the switch is advanced to the "On" positions. Two "On" positions have been provided. The hum and hiss level on one of the "On" positions will be noticeably lower — this is the correct "Polarity" for using the amplifier.

As an added convenience to the artist this amplifier is equipped with a "Standby pilot light" as well as the "Regular pilot light". When the "Green" light is on the amplifier is in "Standby"; when the "Red" light is on the amplifier is "On" and ready to play.

MONITOR JACK

This convenient jack is provided for extending the usefullness of the amplifier. Some of it's many uses include: — Use in tape recording; Use in driving additional amplifiers, feeding into Public Address systems; Use with Hi-Fi amplifiers. For best results the Monitor Jack should be fed into a High-impedance circuit.

EXT. SPEAKER JACK

Provided for adding a wide dispersion of sound to the amplifier. An additional speaker may be plugged into this jack and, when the additional speaker is separated from this amplifier by several feet, a richer and fuller sound will result.

AUX. INPUT JACK

This jack has been provided as an "Extra" input jack for the amplifier. The Tone and Volume controls on the EA-7P will not affect the signal plugged into this jack. Tremolo will be present if the EA-7P instrument is set for Tremolo operation. Reverberation will be available on the EA-7P instrument only.

INSTRUMENT
CONTROL LOCATIONS

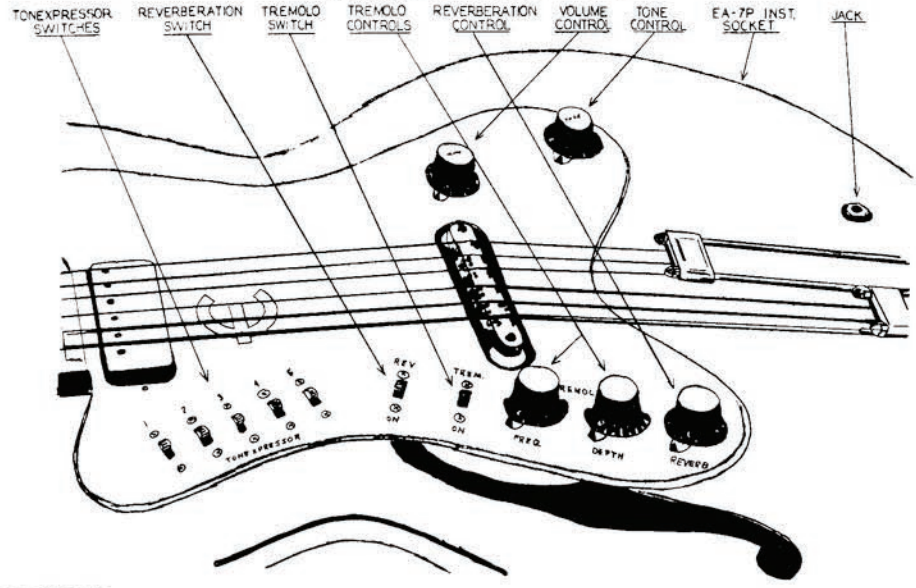

TONEXPRESSOR

These five switches are provided to allow the artist to switch conveniently to various tonal expressions. The normal, or off, position for the switches is toward the strings.

REV. SWITCH

Allows the artist to switch on and off a preset amount of Reverberation.

TREM. SWITCH

Allows the artist to switch on and off the desired Tremolo effect.

TREMOLO CONTROLS

The Tremolo frequency of the Amplifier is controlled by the control marked FREQ. The speeds have been carefully set to cover a wide range of Tremolo effects. The depth of the Tremolo is also variable being controlled by the DEPTH control.

REVERB. CONTROL

Controls the amount of Reverberation, the REV. SWITCH must be on in order to obtain the Reverberation effect.

VOLUME CONTROL

Standard instrument volume control.

TONE CONTROL

Standard instrument tone control, may be used in addition to TONEXPRESSOR switches.

JACK

Provided for use when the EA-7P instrument is to be played into an Amplifier other than the EA-7P. The REVERB and TREMOLO controls will not function with an Amplifier other than the EA-7P.

EA-7P INST. SOCKET

The cable from the EA-7P Amplifier plugs into this socket. Note that this plug is keyed and may be inserted in only one way. The plug must be pushed firmly into the socket and the knurled nut screwed up onto the socket.

OPERATIONAL INSTRUCTIONS FOR USE OF THIS REVERBERATION AMPLIFIER IN CONJUNCTION WITH A REGULAR AMPLIFIER

The use of this Reverberation Amplifier with a Regular Amplifier will add a spacious liveliness to instrument reproduction that is far beyond the possibilities of single amplifier Reverberation. Listed below are the simple instructions for this type of operation.

1. Plug the A.C. cord of this Reverberation Amplifier into a convenient outlet.
2. For normal signal amplification in Regular Amplifier insert one plug of a Shielded Jumper Cord into AUX. INPUT of the Reverberation Amplifier. Plug other end of this jumper into the input jack normally used in the Regular Amplifier. For Reverberation, and/or, normal signal, with or without Tremolo, amplification in the Regular Amplifier move the plug from AUX. INPUT to the Monitor Jack on the Reverberation Amplifier. Set Regular Amplifier Volume control for normal volume.
3. Turn ON the A.C. switches for both amplifiers, the Volume and Tone controls may be set as illustrated on page 2.

Illustrated below is a pictorial diagram showing the correct hook-up.

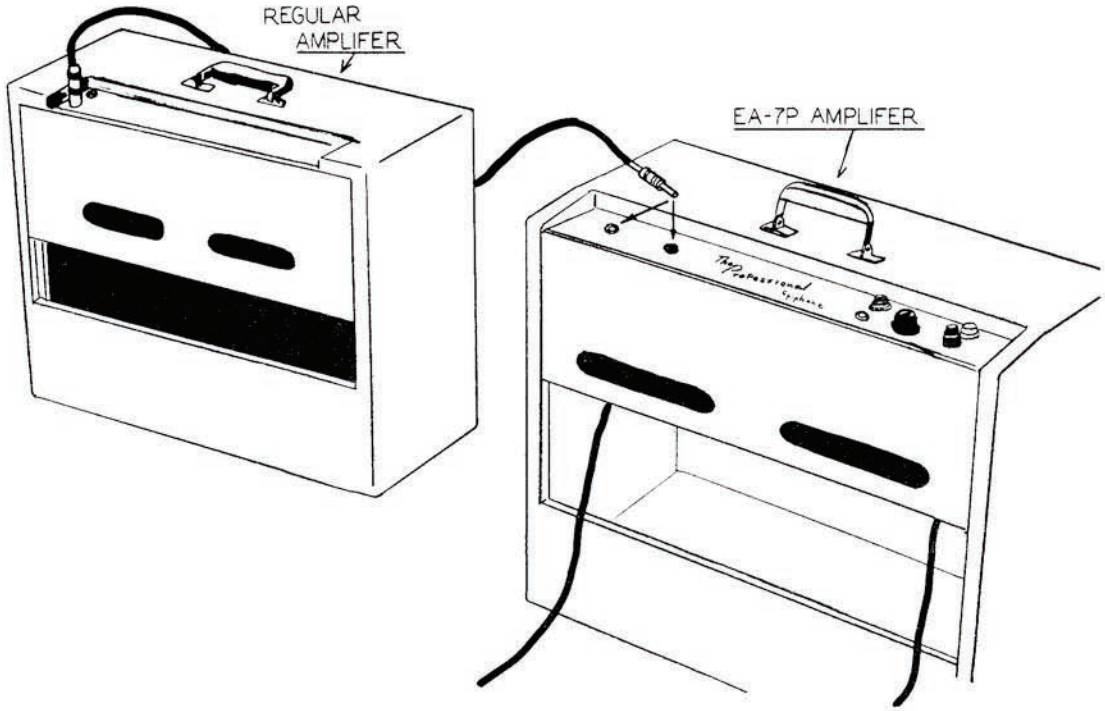

4. The percentage of Reverberation can be controlled by the Reverberation control, Loudness control and the Volume control of the Regular Amplifier.
5. When the Reverberation Switch is OFF, the Reverberation Amplifier is operated as a Regular Amplifier sound without Reverberation. If a cord length space separates the Regular and the Reverberation Amplifiers, an excellent impression of the "Stero" and ECHO effect is obtained. When the Reverberation Switch is ON, the Reverb. signal is super-imposed on the above "STERO" sound with a minimum contrast of volume change.

THIS SCHEMATIC FOR AMPS STARTED IN 1963

Cable Color Code
FOR EA7/P
INST. CABLE

1 - GREEN — SHIELDED
2 - Red — SHIELDED
3 - yellow
4 - Blue
5 - Brown — SHIELDED
6 - SHIELD

EA-7P

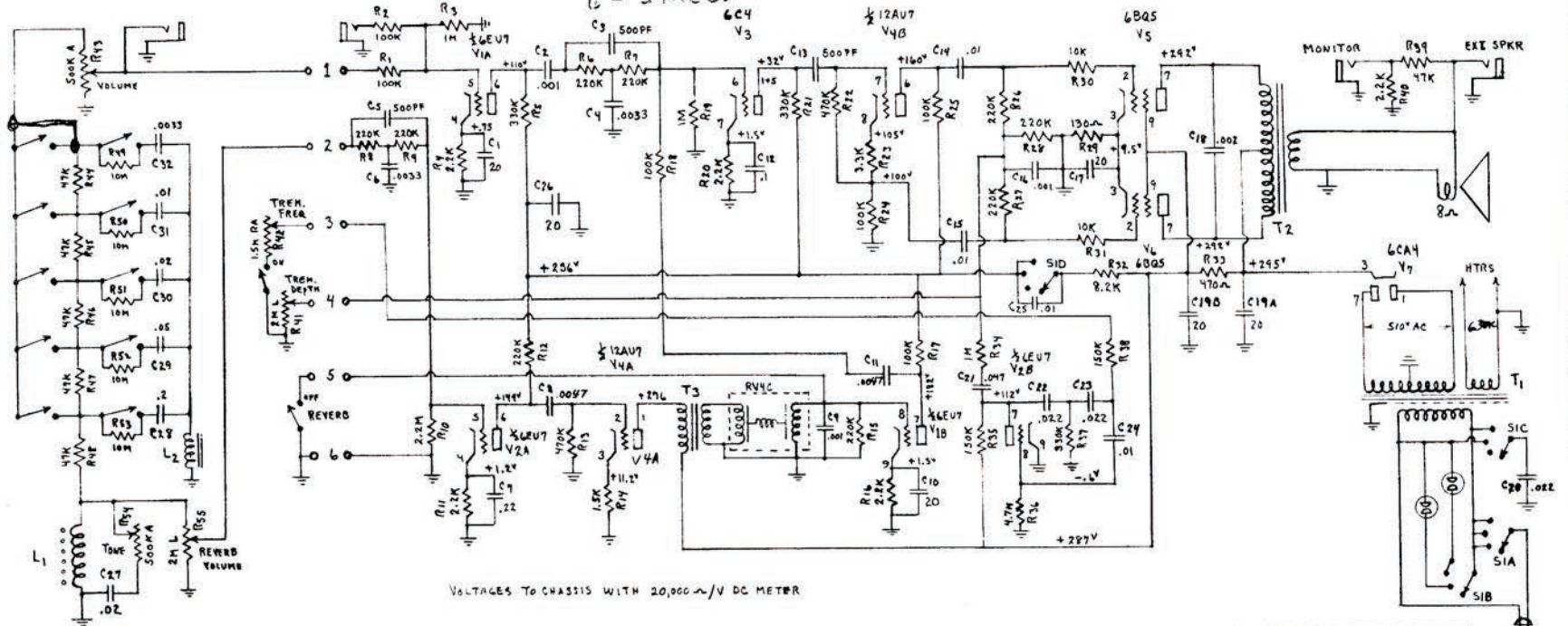

L1	Pickup	CPA-1023	R41	TREMOLO DEPTH CONTROL	2M LINEAR	CBA 811 - 3708
L2	CHOKE	GA90C-1	R42	" FREQ "	1.5M REVERSED	CBA 811 - 3711
T1	POWER XFMR	TF 8A-P	R43	INSTRUMENT VOL "	500K AUDIO	CBA 811 - 3707
T2	OUTPUT "	TF 18-01	R54	" TONE "	500K "	CBA 811 - 3707
T3	DRIVER "	TF E1400	R55	REVERB VOL "	2M LINEAR	CBA 811 - 3708
S1	4 POLE, 4 POS	SW 78				
REVERB UNIT		RV4C				

CAPACITORS IN MFD
RESISTORS IN OHMS K = 1000, M = 1000000

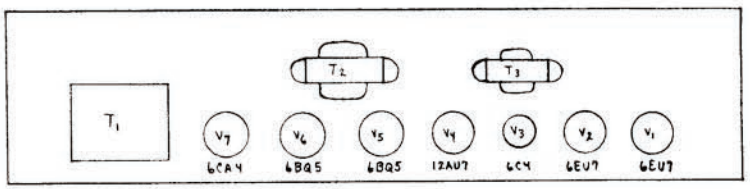

EPIPHONE

THE PROFESSIONAL
MODEL EA-8P OUTFIT

INSTRUCTIONS

EPIPHONE Inc., KALAMAZOO, MICHIGAN

REVERB UNIT UNPACKING INSTRUCTIONS

IMPORTANT — READ CAREFULLY BEFORE USE

CAUTION

The Reverb Unit has been carefully constructed. It is, however, a delicate electronic device. Treat it with the same care and respect given a TV set.

Avoid dropping, sudden jolts, or rough handling and it will give excellent service. This beautifully musical Reverberation effect is not to be confused with the repeating signal produced by the mechanical tape recorder style of echo units.

UNPACKING

Amplifiers are carefully packed to prevent damage in shipment. However, upon receipt of the amplifier, examine carefully to determine if there has been breakage of tubes or parts. If damage has occurred during shipment, call the Transportation Company immediately, and place a claim.

TUBES

Make certain all tubes are seated firmly into their respective sockets. Each tube is labeled for proper replacement should any tube be out of its socket. Be especially careful when inserting tubes to see that the pins on the tube are correctly aligned with the holes in the socket before pushing into place. Do not twist tube — push tube straight into socket. It is advisable to check tubes from time to time depending on amount of use and excellence of performance. *Be sure tubes are always returned to proper sockets and seated firmly.*

REVERB POWER UNIT SET UP INSTRUCTIONS

CAUTION

Damage to the amplifier will result if it is connected to an improper power source. This amplifier is designed to be operated on 105-125 volt, 50-60 cycle alternating current only. The voltage from the power lines should not exceed 125, and the frequency of the current should be either 50 or 60 cycles. When ready to use power, insert the plug on the power cord into the electric outlet and move switch to "on." After approximately one minute for the tubes to heat, the amplifier is ready for use.

The Reverberation Unit must always be placed on a solid non-vibrating surface or footing when in operation.

Any sudden shock, jolt, or wiggle, when in use, will cause undesirable noise. The resultant clatter of an inadvertant shake or bump is annoying but not necessarily harmful. This delicate sensitivity to shock and vibration is a normal characteristic of the device.

No problem will be encountered while the unit is connected if supporting surface is solid and unit is not moved about. To avoid the unwanted noise, turn the reverberation unit off by pressing the foot switch.

FUSE

The fuse used in this Amplifier is a type 3AG of two ampere rating. DO NOT USE FUSES OF HIGHER RATING

SERVICE

If the amplifier is in need of servicing, it should be taken to a reliable radio man. The electrical diagram in this folder should be shown the repairman to assist him in servicing the amplifier.

INSTRUMENT
CONTROL LOCATIONS

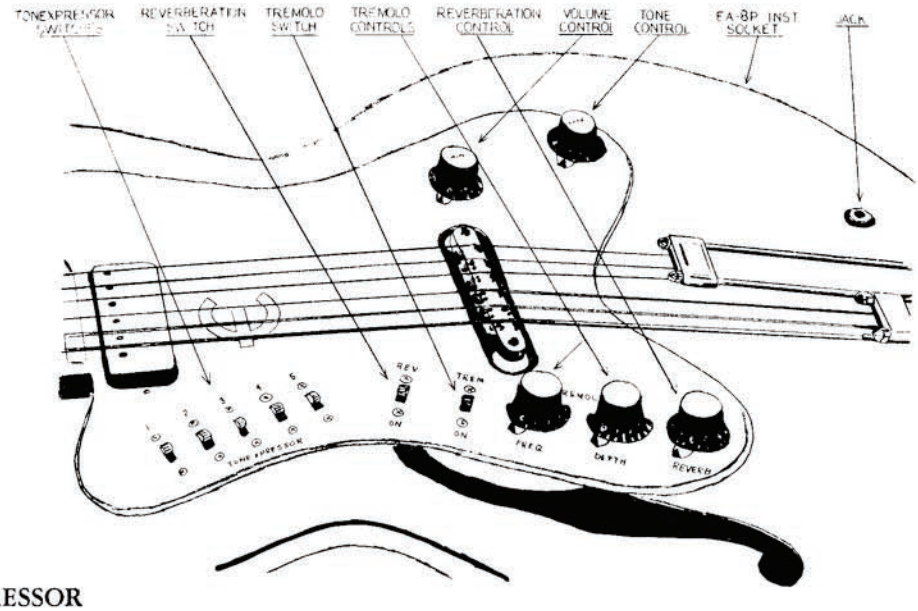

TONEXPRESSOR

These five switches are provided to allow the artist to switch conveniently to various tonal expressions. The normal, or off, position for the switches is toward the strings.

REV. SWITCH

Allows the artist to switch on and off a preset amount of Reverberation.

TREM. SWITCH

Allows the artist to switch on and off the desired Tremolo effect.

TREMOLO CONTROLS

The Tremolo frequency of the Amplifier is controlled by the control marked FREQ. The speeds have been carefully set to cover a wide range of Tremolo effects. The depth of the Tremolo is also variable being controlled by the DEPTH control.

REVERB. CONTROL

Controls the amount of Reverberation, the REV. SWITCH must be on in order to obtain the Reverberation effect.

VOLUME CONTROL

Standard instrument volume control.

TONE CONTROL

Standard instrument tone control, may be used in addition to TONEXPRESSOR switches.

JACK

Provided for use when the EA-8P instrument is to be played into an Amplifier other than the EA-8P. The REVERB and TREMOLO controls will not function with an Amplifier other than the EA-8P.

EA-8P INST. SOCKET

The cable from the EA-8P Amplifier plugs into this socket. Note that this plug is keyed and may be inserted in only one way. The plug must be pushed firmly into the socket and the knurled nut screwed up onto the socket.

A.C. POWER-POLARITY SWITCH

A convenient switch has been provided for performing a total of three functions, turning the amplifier on and off, putting the amplifier in "Standby" and selecting the proper polarity of the power source which reduces the A.C. hum and other extraneous noises to a minimum. In the "Standby" position the amplifier is kept "warmed up" and ready to play at the instant the switch is advanced to the "On" positions. Two "On" positions have been provided. The hum and hiss level on one of the "On" positions will be noticeably lower — this is the correct "Polarity" for using the amplifier.

As an added convenience to the artist this amplifier is equipped with a "Standby pilot light" as well as the "Regular pilot light". When the "Green" light is on the amplifier is in "Standby"; when the "Red" light is on the amplifier is "On" and ready to play.

MONITOR JACK

This convenient jack is provided for extending the usefullness of the amplifier. Some of it's many uses include: — Use in tape recording; Use in driving additional amplifiers, feeding into Public Address systems; Use with Hi-Fi amplifiers. For best results the Monitor Jack should be fed into a High-impedance circuit.

EXT. SPEAKER JACK

Provided for adding a wide dispersion of sound to the amplifier. An additional speaker may be plugged into this jack and, when the additional speaker is separated from this amplifier by several feet, a richer and fuller sound will result.

AUX. INPUT JACK

This jack has been provided as an "Extra" input jack for the amplifier. The Tone and Volume controls on the EA-8P will not affect the signal plugged into this jack. Tremolo will be present if the EA-8P instrument is set for Tremolo operation. Reverberation will be available on the EA-8P instrument only.

EA-8P

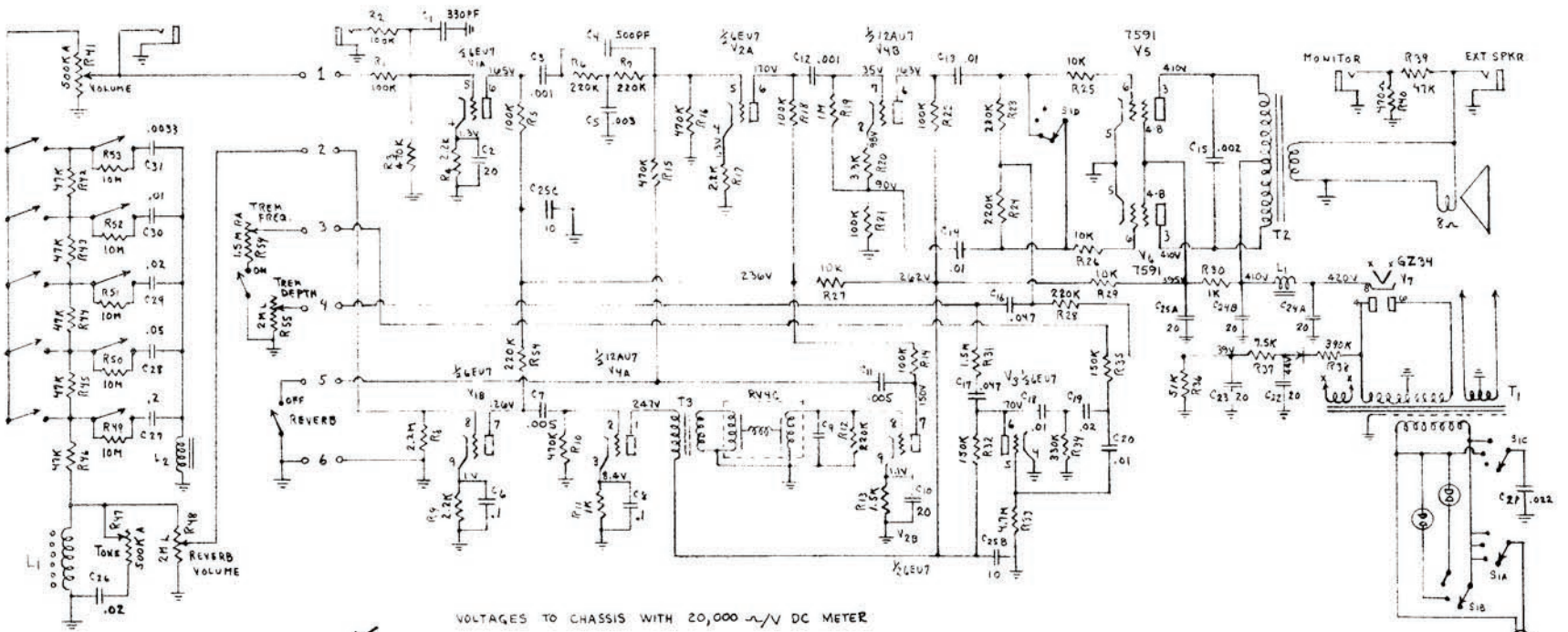

L1	PICKUP	CPA-1023
L2	CHOKE	GA90C-1
T1	POWER XFMR	TF60P
T2	OUTPUT XFMR	TF-P6417
T3	DRIVER XFMR	TF E6400
S1	4 POLE, 4 POS SWITCH	SW 78
REVERB UNIT		RV4C

R41	INSTRUMENT VOL CONTROL	500K AUDIO	CBA811-3707
R47	INSTRUMENT TONE CONTROL	500K AUDIO	CBA811-3707
R48	REVERB VOL CONTROL	2M LINEAR	CBA811-3708
R54	TREMOLO FREQ CONTROL	1.5M REVERSED	CBA811-3711
R55	TREMOLO DEPTH CONTROL	2M LINEAR	CBA811-3708

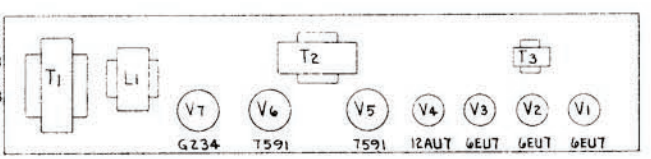

CAPACITORS IN MFD
RESISTORS IN OHMS K=1,000 ; M=1,000,000

EA-10 DELUXE
EPIPHONE, INC.

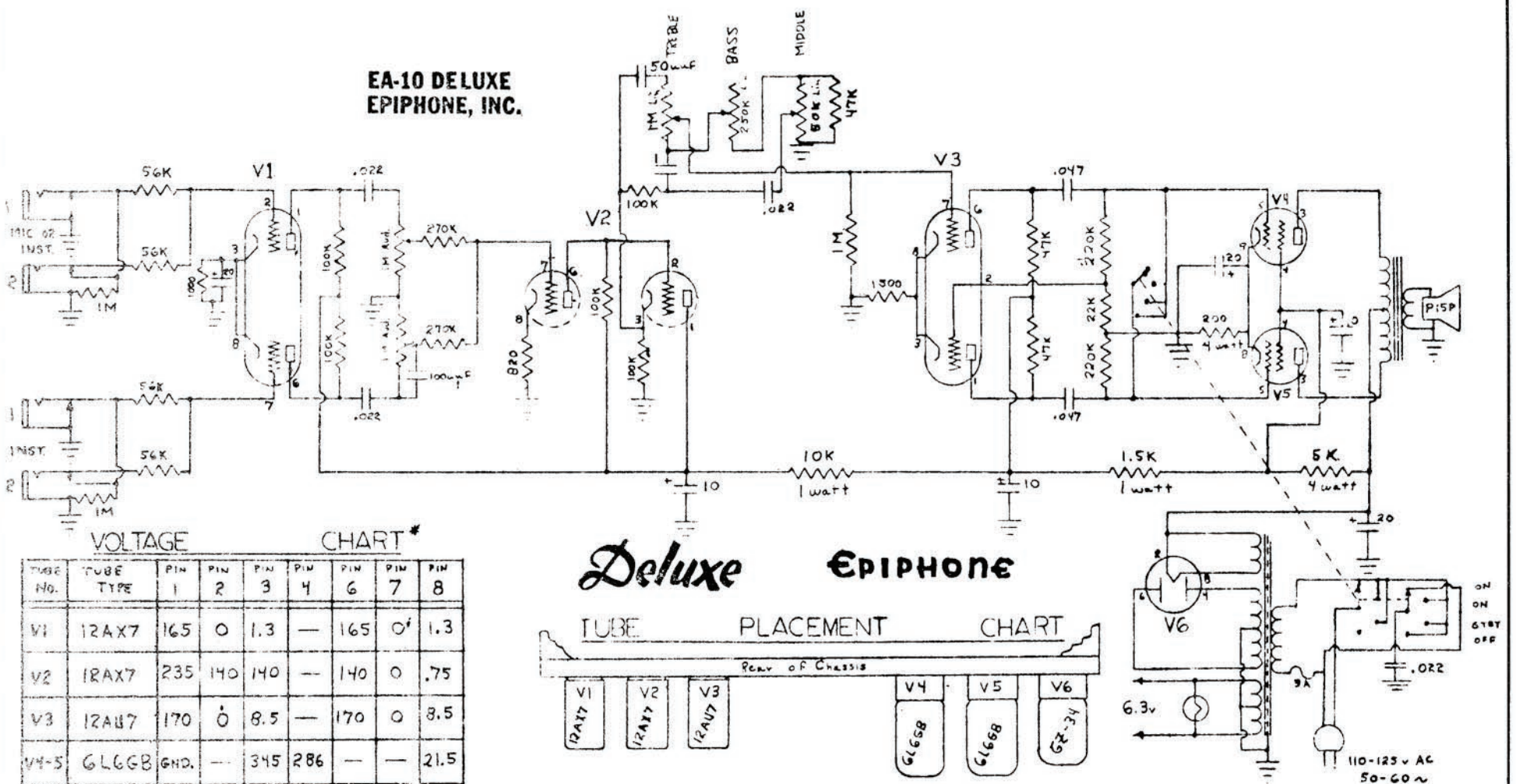

VOLTAGE CHART*

TUBE NO.	TUBE TYPE	PIN 1	PIN 2	PIN 3	PIN 4	PIN 6	PIN 7	PIN 8
V1	12AX7	165	0	1.3	—	165	0	1.3
V2	12AX7	235	140	140	—	140	0	.75
V3	12AU7	170	0	8.5	—	170	0	8.5
V4-5	6L6GB	GND.	—	345	286	—	—	21.5
V6	GZ 34	GND	353	—	300 RMS	300 RMS	—	—

* ALL DC. VOLTAGES MEASURED TO CHASSIS WITH 20,000 ~/v METER.

Deluxe EPIPHONE

TUBE PLACEMENT CHART

EPIPHONE

FUTURA

MODEL EA-12RVT AMPLIFIER

INSTRUCTIONS

EPIPHONE Inc., KALAMAZOO, MICHIGAN

REVERB UNIT UNPACKING INSTRUCTIONS

IMPORTANT — READ CAREFULLY BEFORE USE

CAUTION

The Reverb Unit has been carefully constructed. It is, however, a delicate electronic device. Treat it with the same care and respect given a TV set.

Avoid dropping, sudden jolts, or rough handling and it will give excellent service. This beautifully musical Reverberation effect is not to be confused with the repeating signal produced by the mechanical tape recorder style of echo units.

UNPACKING

Amplifiers are carefully packed to prevent damage in shipment. However, upon receipt of the amplifier, examine carefully to determine if there has been breakage of tubes or parts. If damage has occurred during shipment, call the Transportation Company immediately, and place a claim.

TUBES

Make certain all tubes are seated firmly into their respective sockets. Each tube is labeled for proper replacement should any tube be out of its socket. Be especially careful when inserting tubes to see that the pins on the tube are correctly aligned with the holes in the socket before pushing into place. Do not twist tube — push tube straight into socket. It is advisable to check tubes from time to time depending on amount of use and excellence of performance. *Be sure tubes are always returned to proper sockets and seated firmly.*

REVERB POWER UNIT SET UP INSTRUCTIONS

CAUTION

Damage to the amplifier will result if it is connected to an improper power source. This amplifier is designed to be operated on 105-125 volt, 50-60 cycle alternating current only. The voltage from the power lines should not exceed 125, and the frequency of the current should be either 50 or 60 cycles. When ready to use power, insert the plug on the power cord into the electric outlet and move switch to "on." After approximately one minute for the tubes to heat, the amplifier is ready for use.

The Reverberation Unit must always be placed on a solid non-vibrating surface or footing when in operation.

Any sudden shock, jolt, or wiggle, when in use, will cause undesirable noise. The resultant clatter of an inadvertant shake or bump is annoying but not necessarily harmful. This delicate sensitivity to shock and vibration is a normal characteristic of the device.

No problem will be encountered while the unit is connected if supporting surface is solid and unit is not moved about. To avoid the unwanted noise, turn the reverberation unit off by pressing the foot switch.

FUSE

The fuse used in this Amplifier is a type 3AG of three amperes rating. DO NOT USE FUSES OF HIGHER RATING

TREMOLO

The Tremolo effect adds another dimension to the Reverberation effect. It can be used either with or without reverberation at the players discretion. The Tremolo is turned on or off by the use of the foot switch. The Tremolo Frequency Range has been carefully set to cover a wide range of Tremolo effects. The Depth of the Tremolo is also variable being controlled by the Depth control.

REVERBERATION — EFFECTIVE IN CHANNEL 2 ONLY

Due to the unusual flexibility of the Reverberation circuit, it is important that the Operator understands the various control settings to obtain the total range of Reverberation effects of which this Amplifier is capable. Illustrated below are several examples of control settings which will reproduce different Reverberation effects.

Loudness	Tone	Reverberation	Depth	Frequency

Example No. 1. 50% Main Signal - 50% Reverb.

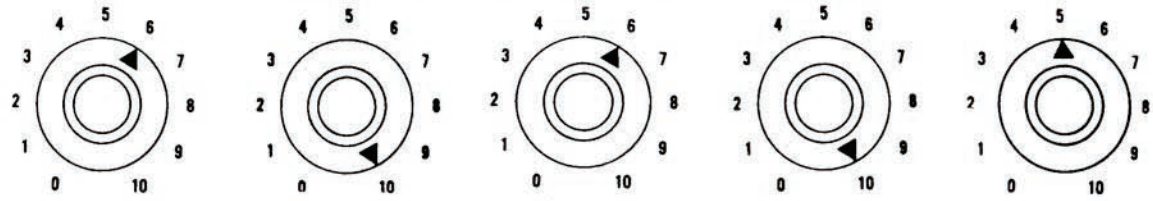

INSTRUMENT SETTINGS — Tone control and/or toggle switch in maximum treble position. Volume control setting 2½ to 3.

Example No. 2. 75% Main Signal - 25% Reverb.

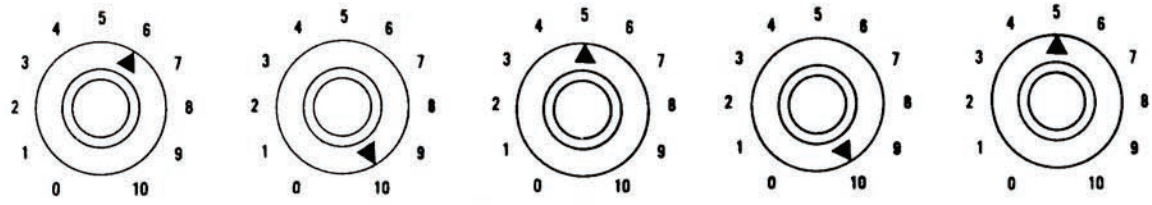

INSTRUMENT SETTINGS — Same as Example No. 1.

Example No. 3. 25% Main Signal - 75% Reverb.

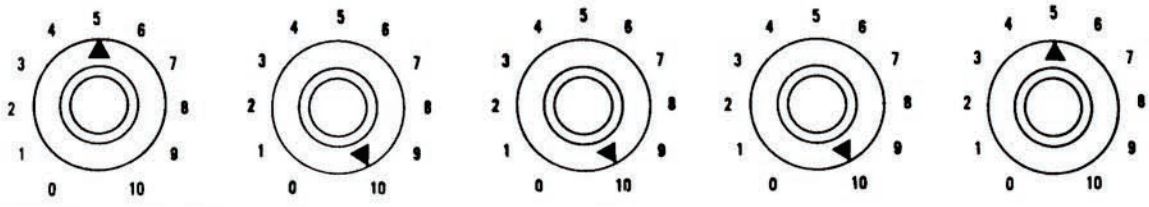

INSTRUMENT SETTINGS — Same as Example No. 1.

Example No. 4. 100% Reverb.

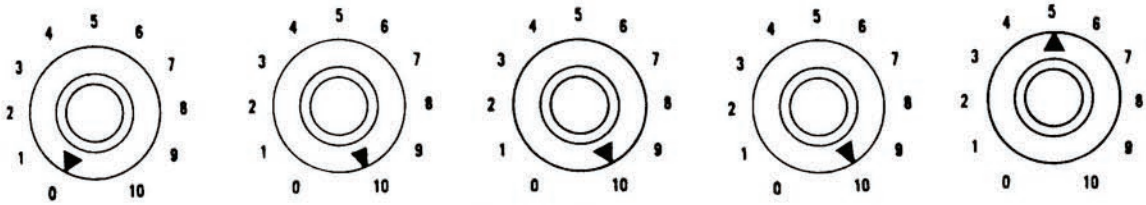

INSTRUMENT SETTINGS — Same as Example No. 1.

FOOT SWITCH MUST BE IN THE "ON" POSITION FOR REVERBERATION.

CONTROL LOCATIONS

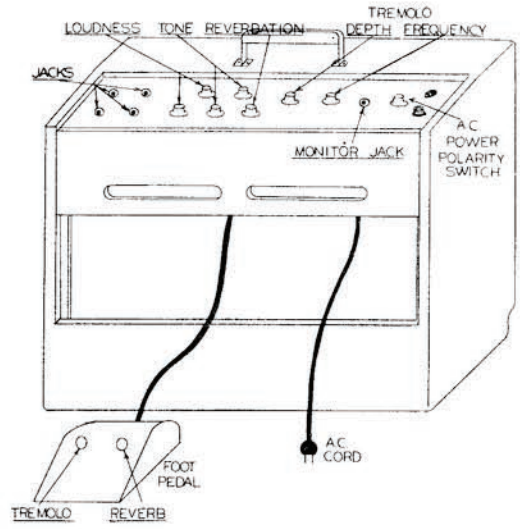

OPERATIONAL INSTRUCTIONS FOR USE OF THIS REVERBERATION AMPLIFIER IN CONJUNCTION WITH A REGULAR AMPLIFIER

The use of this Reverberation Amplifier with a Regular Amplifier will add a spacious liveliness to instrument reproduction that is far beyond the possibilities of single amplifier Reverberation. Listed below are the simple instructions for this type of operation.

1. Plug the A.C. cord of this Reverberation Amplifier into a convenient outlet.
2. Now plug one end of a shielded jumper cord into the No. 1 Jack of Channel 2 (the one with the Red Washer) Plug the other end of the jumper cord into the input jack normally used in a regular amplifier. Set regular amplifier for normal volume.
3. The Guitar instrument cord should be plugged into the No. 2 Jack of Channel 2 of this Reverberation Amplifier. Plug the A.C. line cord of the Regular Amplifier into a convenient outlet.
4. Turn on the A.C. switches for both amplifiers and the tone controls may be set as illustrated on page 2.
5. If both Reverb. and Normal Signals are to be heard at the regular Amplifier, plug the Shielded Jumper Cord into the Monitor Jack of this Reverberation Amplifier instead of the Jack with the Red Washer.

Illustrated below is a pictorial diagram showing the correct hook-up.

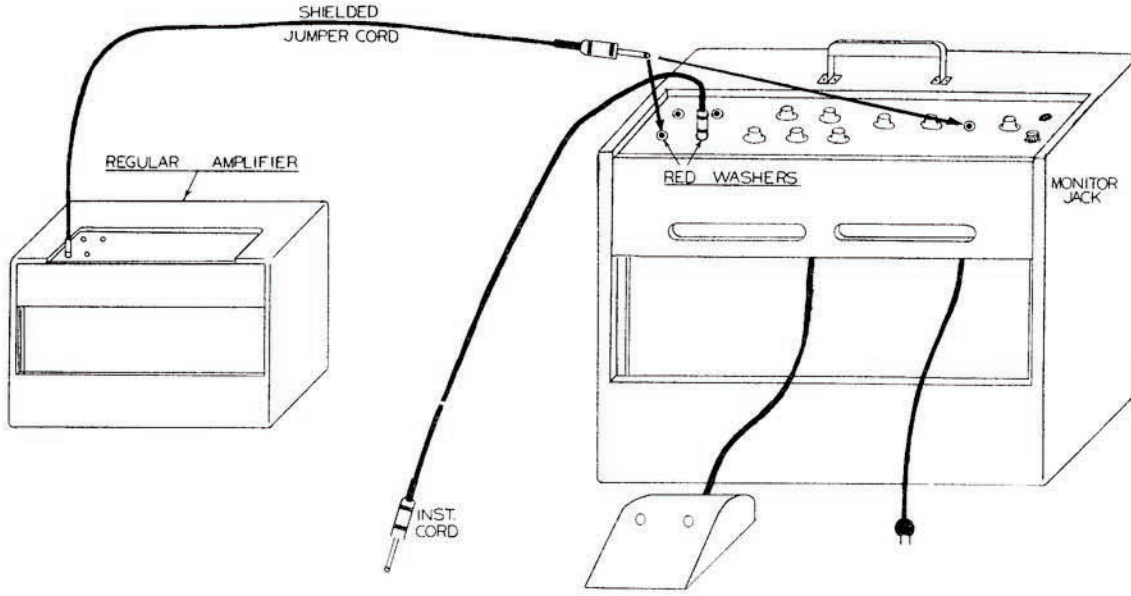

6. Place the combination reverberation, tremolo foot control switch in a convenient position and the system is ready to operate. Either, or both, reverberation and tremolo effect is available by switching the indicated switch ON or OFF.
7. The percentage of Reverberation can be controlled by the Reverberation Control, Channel 2 Loudness Control and the Volume Control of the Regular Amplifier.
8. The instrument is ready to be played. If reverb signal is not coming through, step on the foot switch as it may be in the OFF position. Thereafter, the reverb effect can be conveniently cut in or out at a snap of the foot switch.
9 When the Reverberation Foot Switch is OFF, the reverb unit operates as a regular amplifier adding an extra self-powered speaker that expands the regular amplifier sound without reverberation. If a cord length space separates the regular amplifier and the reverberation unit, an excellent impression of the "Stereo" and echo effect is obtained.
When Reverberation Foot Switch is ON, the reverb signal is super-imposed on the above "Stereo" sound with a minimum contrast of volume change.

OPERATION OF MICROPHONE

The high gain and high fidelity characteristics of this Amplifier, permit the use of most of the popular high impedance microphones for public address work. The microphone should be plugged into the Number One Jack of Channel 1.

If the Microphone jacks are not in use, turn the Channel one Loudness control completely off.

A.C. POWER-POLARITY SWITCH

A convenient switch has been provided for performing a total of three functions, turning the amplifier on and off, putting the amplifier in "Standby" and selecting the proper polarity of the power source which reduces the A.C. hum and other extraneous noises to a minimum. In the "Standby" position the amplifier is kept "warmed up" and ready to play at the instant the switch is advanced to the "On" positions. Two "On" positions have been provided. The hum and hiss level on one of the "On" positions will be noticeably lower — this is the correct "Polarity" for using the amplifier.

In locations of extremely high noise levels, clipping the "Ground Clip" to a grounded object will greatly reduce objectionable noise and hum.

SERVICE

If the amplifier is in need of servicing, it should be taken to a reliable radio man. The electrical diagram in this folder should be shown the repairman to assist him in servicing the amplifier.

EA-12RVT

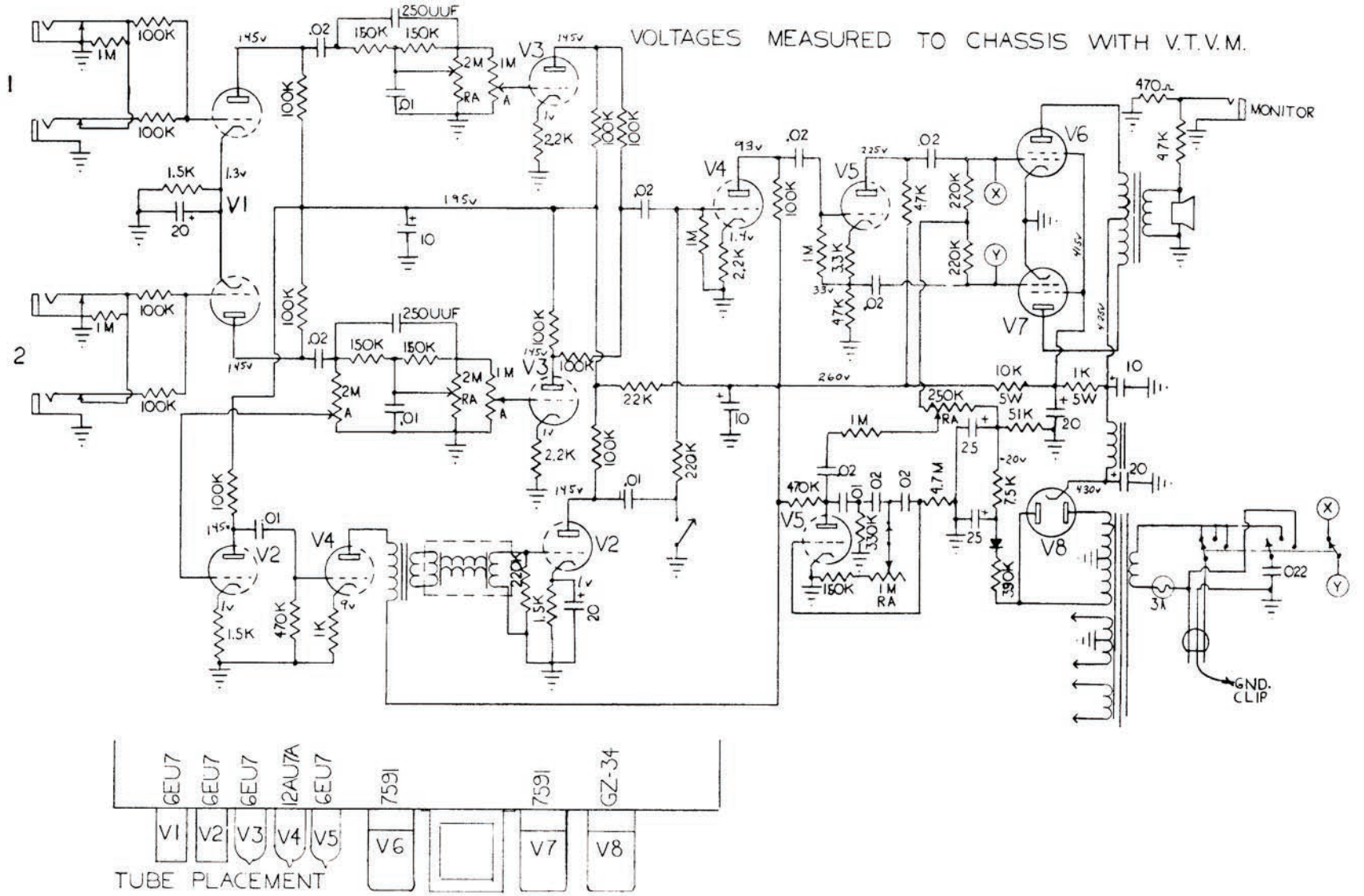
VOLTAGES MEASURED TO CHASSIS WITH V.T.V.M.
1
2
V1
V2
V3
V4
V5
V6
V7
V8
MONITOR
GND. CLIP
TUBE PLACEMENT
6EU7
6EU7
6EU7
12AU7A
6EU7
7591
7591
GZ-34

EPIPHONE

ZEPHYR

MODEL EA-15 RVT AMPLIFIER

INSTRUCTIONS

EPIPHONE Inc., KALAMAZOO, MICHIGAN

IMPORTANT — READ CAREFULLY BEFORE USE

CAUTION

The Reverb Unit has been carefully constructed. It is, however, a delicate electronic device. Treat it with the same care and respect given a TV set.

Avoid dropping, sudden jolts, or rough handling and it will give excellent service. This beautifully musical Reverberation effect is not to be confused with the repeating signal produced by the mechanical tape recorder style of echo units.

UNPACKING

Amplifiers are carefully packed to prevent damage in shipment. However, upon receipt of the amplifier, examine carefully to determine if there has been breakage of tubes or parts. If damage has occurred during shipment, call the Transportation Company immediately, and place a claim.

TUBES

Make certain all tubes are seated firmly into their respective sockets. Each tube is labeled for proper replacement should any tube be out of its socket. Be especially careful when inserting tubes to see that the pins on the tube are correctly aligned with the holes in the socket before pushing into place. Do not twist tube -- push tube straight into socket. It is advisable to check tubes from time to time depending on amount of use and excellence of performance. *Be sure tubes are always returned to proper sockets and seated firmly.*

CAUTION

Damage to the amplifier will result if it is connected to an improper power source. This amplifier is designed to be operated on 105-125 volt, 50-60 cycle alternating current only. The voltage from the power lines should not exceed 125, and the frequency of the current should be either 50 or 60 cycles. When ready to use amplifier, insert the plug on the power cord into the electric outlet and move switch to "on." After approximately one minute for the tubes to heat, the amplifier is ready for use.

A.C. POWER-POLARITY SWITCH

A convenient switch has been provided for performing a total of three functions, turning the amplifier on and off, and selecting the proper polarity of the power source which reduces the A.C. hum and other extraneous noises to a minimum. Two "On" positions have been provided. The hum and hiss level on one of the "On" positions will be noticeably lower - this is the correct "Polarity" for using the amplifier.

FUSE

The fuse used in this Amplifier is a type 3AG of three amperes rating. DO NOT USE FUSES OF HIGHER RATING

SERVICE

If the amplifier is in need of servicing, it should be taken to a reliable radio man. The electrical diagram in this folder should be shown the repairman to assist him in servicing the amplifier.

REVERBERATION — EFFECTIVE IN CHANNEL 2 ONLY

The Reverberation Unit must always be placed on a solid non-vibrating surface or footing when in operation.

Any sudden shock, jolt, or wiggle, when in use, will cause undesirable noise. The resultant clatter of an inadvertant shake or bump is annoying but not necessarily harmful. This delicate sensitivity to shock and vibration is a normal characteristic of the device.

No problem will be encountered while the unit is connected if supporting surface is solid and unit is not moved about. To avoid the unwanted noise, turn the reverberation unit off by pressing the foot switch.

TREMOLO — EFFECTIVE IN CHANNEL 2 ONLY

The Tremolo effect adds another dimension to the Reverberation effect. It can be used either with or without reverberation at the players discretion. The Tremolo is turned on or off by the use of the foot switch. The Tremolo Frequency Range has been carefully set to cover a wide range of Tremolo effects. The Depth of the Tremolo is also variable being controlled by the Depth control.

OPERATION OF MICROPHONE

The high gain and high fidelity characteristics of this Amplifier, permit the use of most of the popular high impedance microphones for public address work. The microphone should be plugged into the Number One jack and it is not recommended that other instruments be used in conjunction with the microphone.

When using a microphone it is important that the Number 280 or similar shielded plug be attached to the cord. The ordinary phone plug with bakelite or other non-shielded cover is not suitable because the leads from the microphone must be completely shielded. Otherwise, objectionable hum will result. Figure A illustrates the proper way to connect the plug to the microphone cable.

To use the microphone, insert the plug in the Number One jack and advance the Loudness control until a feedback squeal or howl is produced on the loudspeaker. Reduce the Loudness control to just below the feedback point. This setting will vary considerably, depending upon the size of the room, its acoustical properties and the distance between the microphone and loudspeaker. Feedback is the limiting factor in all public address installations and is caused when the level of sound from the loudspeakers is sufficient to actuate the microphone. The general rule when setting up the equipment is to place the loudspeaker as far from the microphone as possible.



Figure A

EA-15RVT

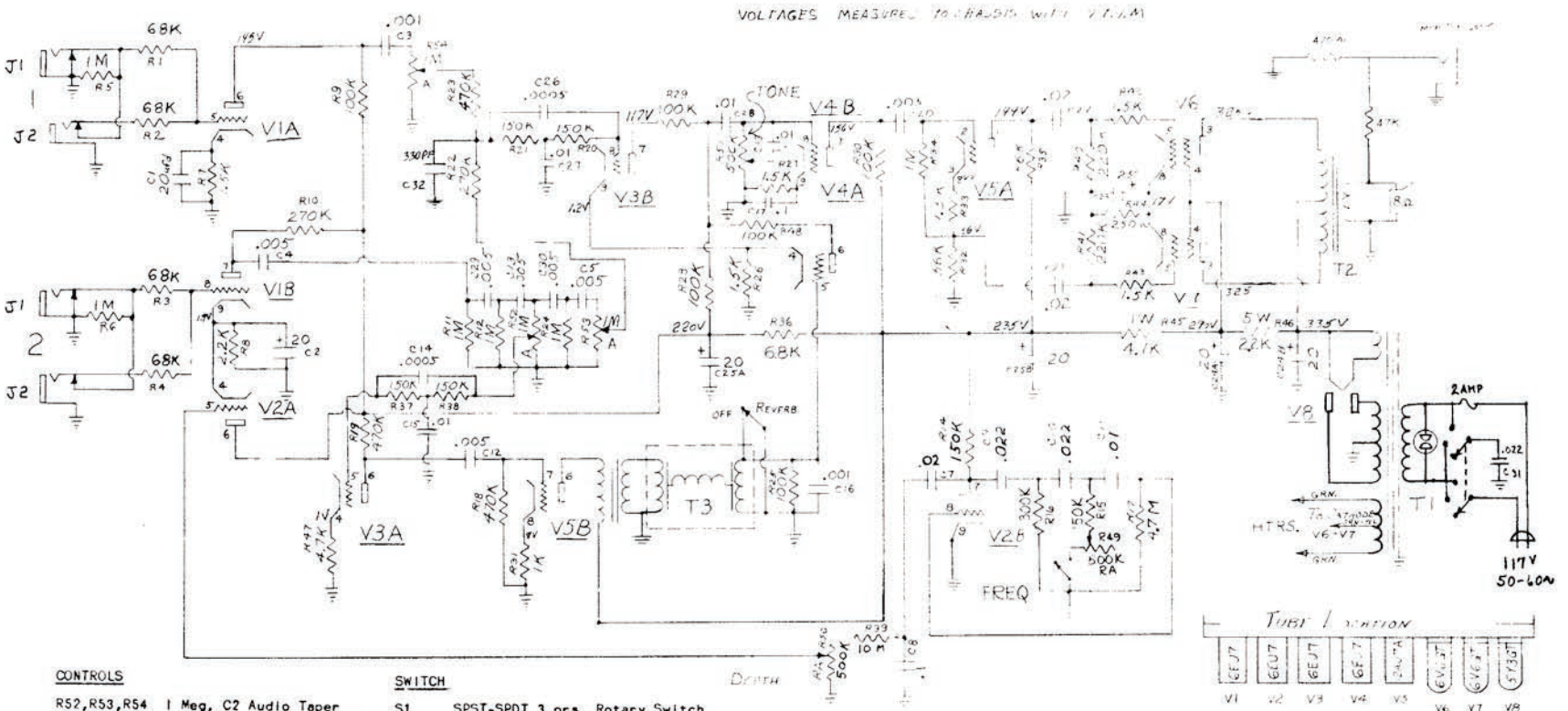

CONTROLS

R52,R53,R54 1 Meg, C2 Audio Taper (Reverb. & Loudness) C-BA-811-3709
R51 (Tone) 500K, C2 Audio Taper C-BA-811-3707
R50 500K, C3 Reversed Audio (Depth) C-BA-811-3704
R49 500K, C3 Reversed Audio (Frequency) C-BA-811-3706

SWITCH

S1 SPST-SPDT 3 prs. Rotary Switch SW-899

SPEAKER

S-7334-2 C15R 15" Speaker with 90 cycle resonance cone. Jensen

TRANSFORMERS

T1	Power Transformer	TF-23-P
T2	Output Transformer	TF-18-01
T3	Reverb. Transformer	TF-E-6400

EPIPHONE

REGENT

MODEL EA-16 RVT AMPLIFIER

INSTRUCTIONS

EPIPHONE Inc., KALAMAZOO, MICHIGAN

IMPORTANT — READ CAREFULLY BEFORE USE

CAUTION

The Reverb Unit has been carefully constructed. It is, however, a delicate electronic device. Treat it with the same care and respect given a TV set.

Avoid dropping, sudden jolts, or rough handling and it will give excellent service. This beautifully musical Reverberation effect is not to be confused with the repeating signal produced by the mechanical tape recorder style of echo units.

UNPACKING

Amplifiers are carefully packed to prevent damage in shipment. However, upon receipt of the amplifier, examine carefully to determine if there has been breakage of tubes or parts. If damage has occurred during shipment, call the Transportation Company immediately, and place a claim.

TUBES

Make certain all tubes are seated firmly into their respective sockets. Each tube is labeled for proper replacement should any tube be out of its socket. Be especially careful when inserting tubes to see that the pins on the tube are correctly aligned with the holes in the socket before pushing into place. Do not twist tube — push tube straight into socket. It is advisable to check tubes from time to time depending on amount of use and excellence of performance. *Be sure tubes are always returned to proper sockets and seated firmly.*

CAUTION

Damage to the amplifier will result if it is connected to an improper power source. This amplifier is designed to be operated on 105-125 volt, 50-60 cycle alternating current only. The voltage from the power lines should not exceed 125, and the frequency of the current should be either 50 or 60 cycles. When ready to use amplifier, insert the plug on the power cord into the electric outlet and move switch to "on." After approximately one minute for the tubes to heat, the amplifier is ready for use.

A.C. POWER-POLARITY SWITCH

A convenient switch has been provided for performing a total of three functions, turning the amplifier on and off, and selecting the proper polarity of the power source which reduces the A.C. hum and other extraneous noises to a minimum. Two "On" positions have been provided. The hum and hiss level on one of the "On" positions will be noticeably lower - this is the correct "Polarity" for using the amplifier.

FUSE

The fuse used in this Amplifier is a type 3AG of two amperes rating. DO NOT USE FUSES OF HIGHER RATING

SERVICE

If the amplifier is in need of servicing, it should be taken to a reliable radio man. The electrical diagram in this folder should be shown the repairman to assist him in servicing the amplifier.

REVERBERATION — EFFECTIVE IN CHANNEL 2 ONLY

The Reverberation Unit must always be placed on a solid non-vibrating surface or footing when in operation.

Any sudden shock, jolt, or wiggle, when in use, will cause undesirable noise. The resultant clatter of an inadvertant shake or bump is annoying but not necessarily harmful. This delicate sensitivity to shock and vibration is a normal characteristic of the device.

No problem will be encountered while the unit is connected if supporting surface is solid and unit is not moved about. To avoid the unwanted noise, turn the reverberation unit off by pressing the foot switch.

BASS AND TREBLE TONE CONTROLS

A separate control has been provided for control of the bass or low frequencies and for the treble or high frequencies. The use of these two controls allows the player to obtain the maximum combinations of tone from a beautiful clear treble to a deep resonant bass. Setting the "BASS" control at maximum and the "TREBLE" at minimum, produces the deepest, fullest bass tone. Setting the "TREBLE" control at maximum and the "BASS" at minimum produces a chime-like tone rich in higher harmonics and will enable the artist to pick harmonics with greater ease. When both "BASS' and "TREBLE" controls are set at minimum the middle register predominates.

TREMOLO — EFFECTIVE IN CHANNEL 2 ONLY

The Tremolo effect adds another dimension to the Reverberation effect. It can be used either with or without reverberation at the players discretion. The Tremolo is turned on or off by the use of the foot switch. The Tremolo Frequency Range has been carefully set to cover a wide range of Tremolo effects. The Depth of the Tremolo is also variable being controlled by the Depth control.

OPERATION OF MICROPHONE

The high gain and high fidelity characteristics of this Amplifier, permit the use of most of the popular high impedance microphones for public address work. The microphone should be plugged into the Number One jack and it is not recommended that other instruments be used in conjunction with the microphone.

When using a microphone it is important that the Number 280 or similar shielded plug be attached to the cord. The ordinary phone plug with bakelite or other non-shielded cover is not suitable because the leads from the microphone must be completely shielded. Otherwise, objectionable hum will result. Figure A illustrates the proper way to connect the plug to the microphone cable.
To use the microphone, insert the plug in the Number One jack and advance the Loudness control until a feedback squeal or howl is produced on the loudspeaker. Reduce the Loudness control to just below the feedback point. This setting will vary considerably, depending upon the size of the room, its acoustical properties and the distance between the microphone and loudspeaker. Feedback is the limiting factor in all public address installations and is caused when the level of sound from the loudspeakers is sufficient to actuate the microphone. The general rule when setting up the equipment is to place the loudspeaker as far from the microphone as possible.



Figure A

EA16 RVT

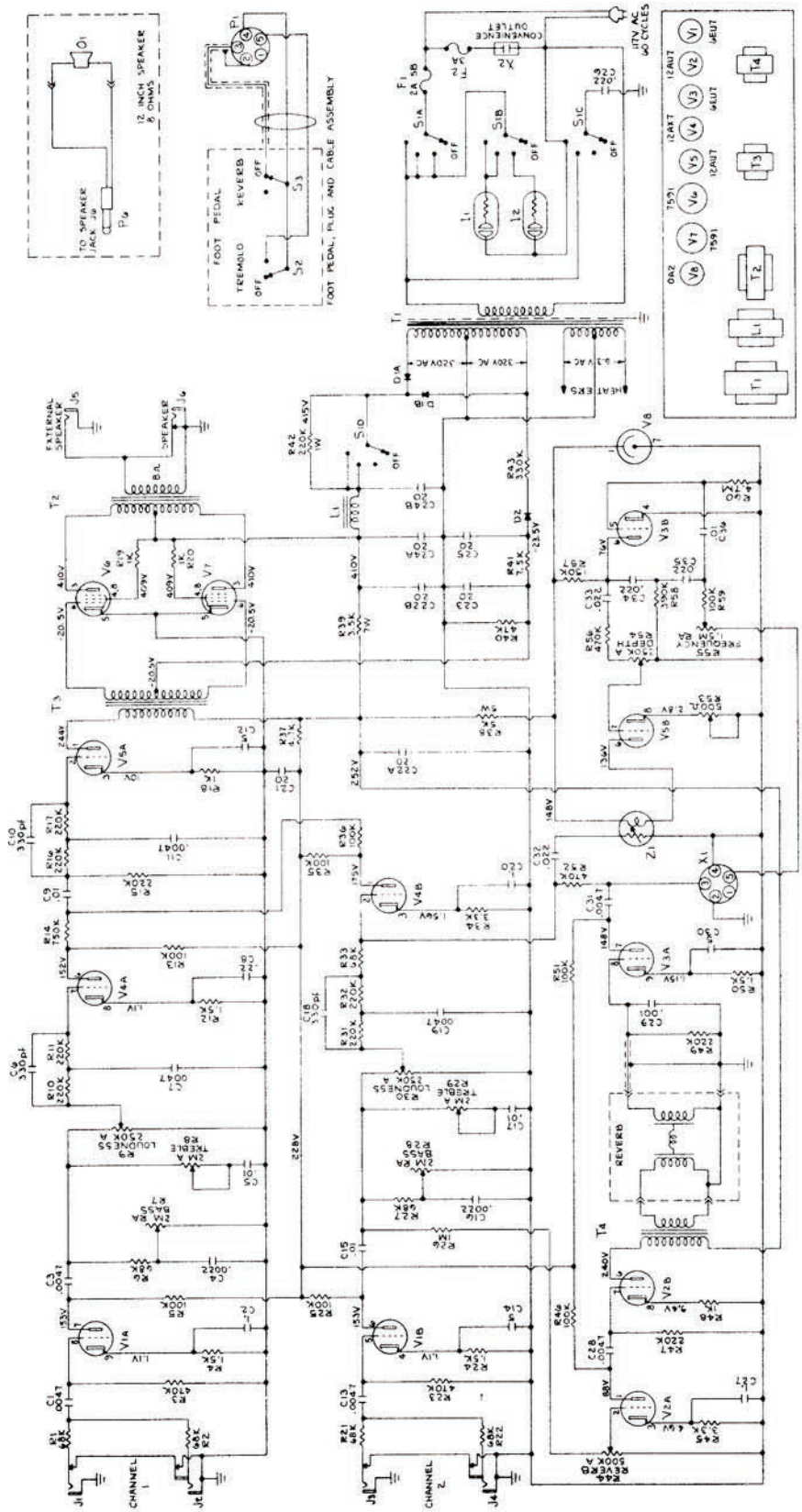

T1	Power Transformer	TF-104P
T2	Output Transformer	TF-P6417
T3	PP Driver Transformer	TF-10010-1
T4	Reverb Transformer	TF-E6400
L1	Filter Choke	TF-3021H
S1A,B,C,D	Switch - off,standby-on-on	SW-78A-1
S2,S3	Switches - SPST	SW-82403
I1	PL-37R Pilot Light (Red)	
I2	PL-38A Filot Light (Amber)	
R9,R30,R54	Control - 250K Audio	CBA-4008
R8,R29	Control - 2 meg, audio	CBA-811-3702-1
R44	Control - 500K Audio	CBA-4007
R55	Control - 1.5 meg, RA	CBA-811-3711-1
R7,R28	Control - 1 meg, audio	CBA-811-3709-1

D1A,B Diode - 1200 PIV D1-57
D2 Diode - 600 PIV D1-713

CN-78PCS-S Foot Pedal Socket
CN-303 AC Convenience Outlet

12-66 500 CPC

EA-22RVT

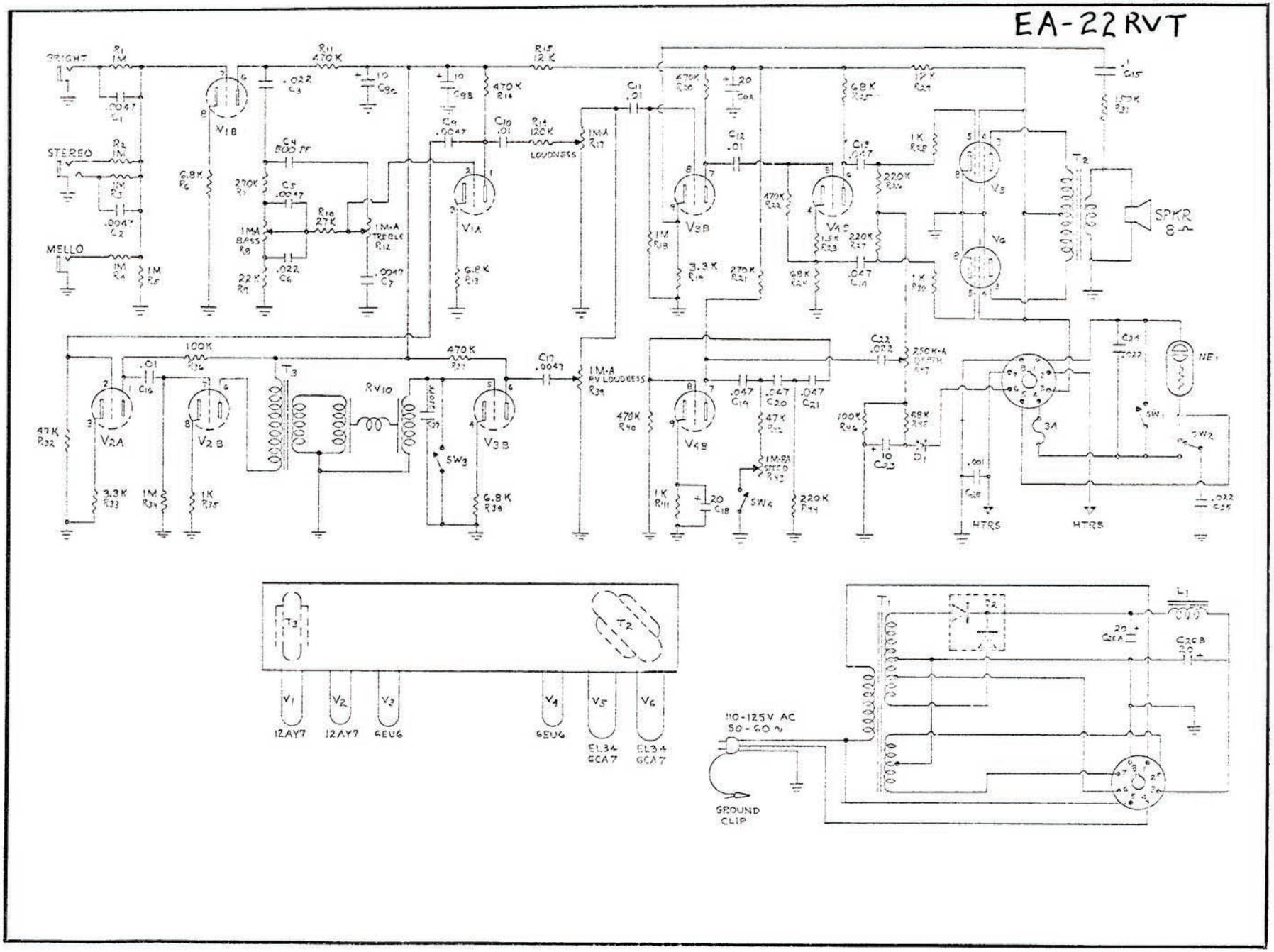
BRIGHT
STEREO
MELLO
LOUDNESS
1M-A BASS
1M-A TREBLE
1M-A RV LOUDNESS
1M-RA SPEED
250K-A DEPTH
SPKR 8Ω
HTRS
HTRS
12AY7
12AY7
6EU6
6EU6
EL34 6CA7
EL34 6CA7
110-125V AC 50-60 ~
GROUND CLIP

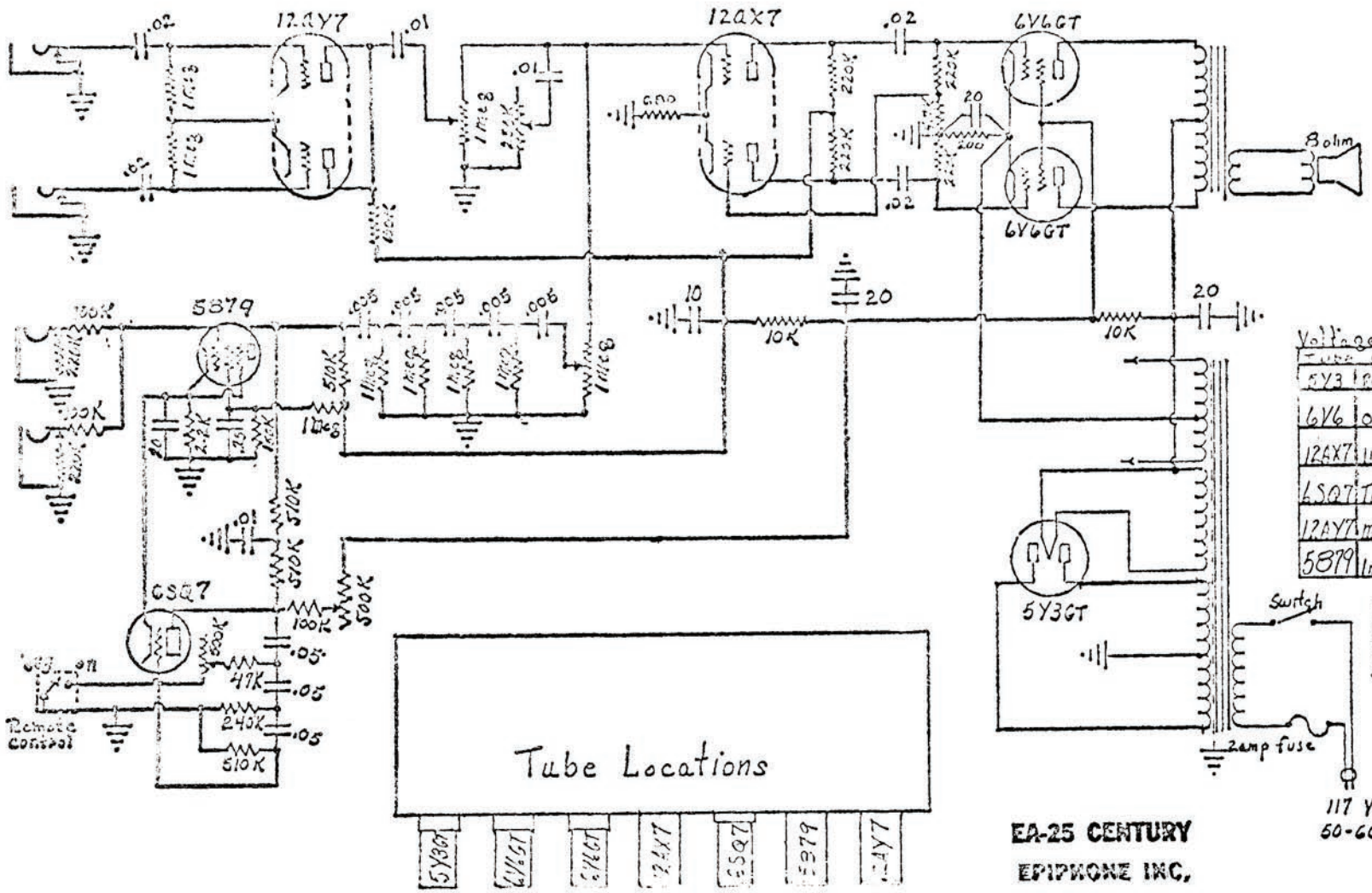

Voltages to Chassis 20,000 OPV

Tube	Use	EP12	Escr	EK	EB
5Y3	Rectifier	320	—	350	—
6V6	output	340	270	15	350
12AX7	inverter	100	—	.8	232
6SQ7	Tremolo	114	—	1+	265
12AY7	microphone	47	—	—	232
5879	Instrument	126	24	1.+	232

Voltages Measured With tremolo Switch off and Depth Control Set at MINIMUM.

EA-25 CENTURY

EPIPHONE INC.

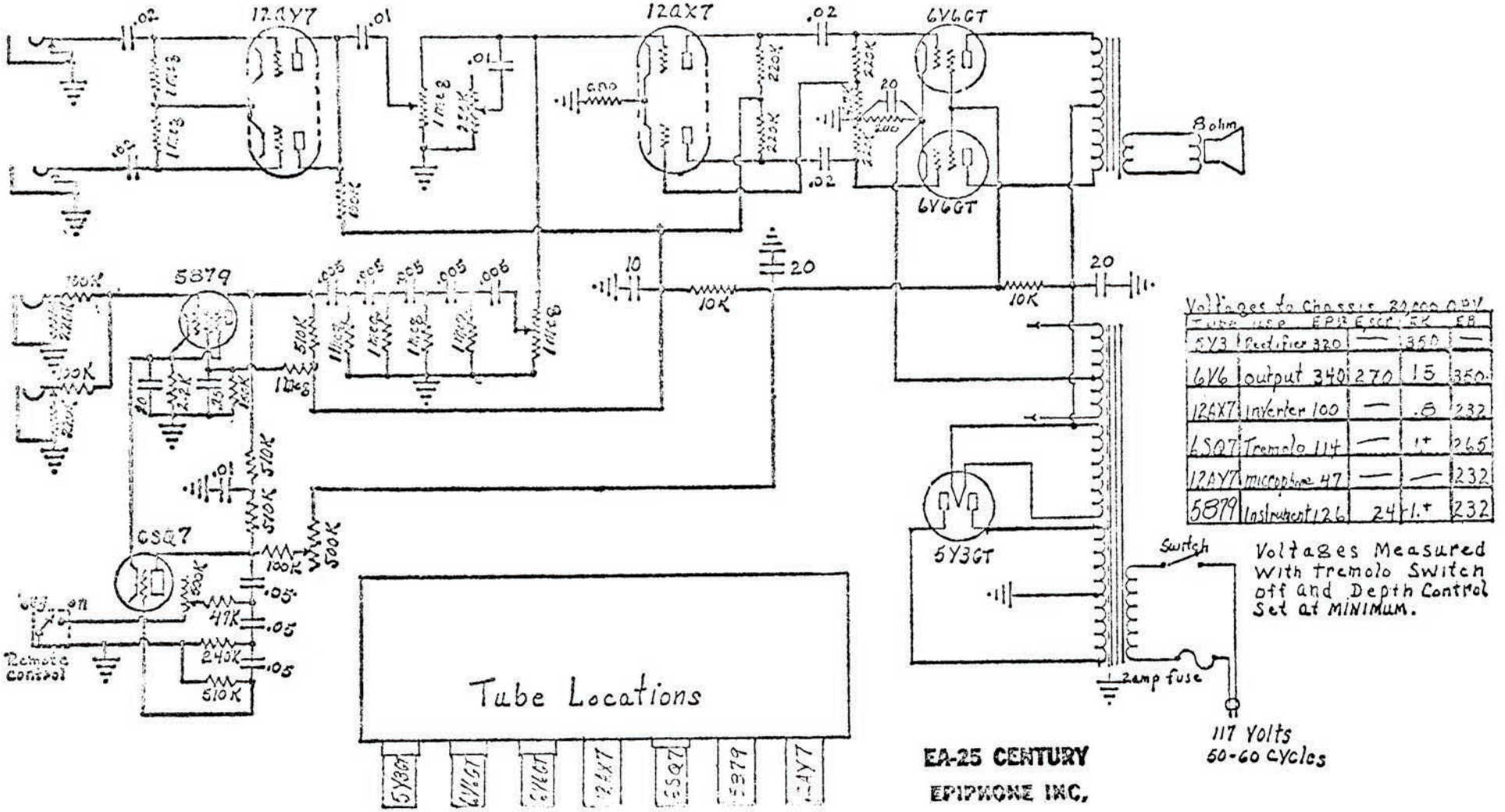

Voltages to chassis 30,000 ohm/V				
Tube use	EP1	ESCR	EK	EB
5Y3 Rectifier	320	—	350	—
6V6 output	340	270	15	350
12AX7 inverter	100	—	.8	232
6SQ7 Tremolo	114	—	1+	265
12AY7 microphone	47	—	—	232
5879 Instrument	126	24	1.+	232

Voltages Measured with tremolo Switch off and Depth Control Set at MINIMUM.

EA-25 CENTURY

EPIPHONE INC.

IMPORTANT — READ CAREFULLY BEFORE USE

CAUTION

The Reverb Unit has been carefully constructed. It is, however, a delicate electronic device. Treat it with the same care and respect given a TV set.

Avoid dropping, sudden jolts, or rough handling and it will give excellent service. This beautifully musical Reverberation effect is not to be confused with the repeating signal produced by the mechanical tape recorder style of echo units.

UNPACKING

Amplifiers are carefully packed to prevent damage in shipment. However, upon receipt of the amplifier, examine carefully to determine if there has been breakage of tubes or parts. If damage has occurred during shipment, call the Transportation Company immediately, and place a claim.

TUBES

Make certain all tubes are seated firmly into their respective sockets. Each tube is labeled for proper replacement should any tube be out of its socket. Be especially careful when inserting tubes to see that the pins on the tube are correctly aligned with the holes in the socket before pushing into place. Do not twist tube — push tube straight into socket. It is advisable to check tubes from time to time depending on amount of use and excellence of performance. *Be sure tubes are always returned to proper sockets and seated firmly.*

CAUTION

Damage to the amplifier will result if it is connected to an improper power source. This amplifier is designed to be operated on 105-125 volt, 50-60 cycle alternating current only. The voltage from the power lines should not exceed 125, and the frequency of the current should be either 50 or 60 cycles. When ready to use amplifier, insert the plug on the power cord into the electric outlet and move switch to "on." After approximately one minute for the tubes to heat, the amplifier is ready for use.

A.C. POWER-POLARITY SWITCH

A convenient switch has been provided for performing a total of three functions, turning the amplifier on and off, and selecting the proper polarity of the power source which reduces the A.C. hum and other extraneous noises to a minimum. Two "On" positions have been provided. The hum and hiss level on one of the "On" positions will be noticeably lower - this is the correct "Polarity" for using the amplifier.

FUSE

The fuse used in this Amplifier is a type 3AG of 1½ amperes rating. DO NOT USE FUSES OF HIGHER RATING

SERVICE

If the amplifier is in need of servicing, it should be taken to a reliable radio man. The electrical diagram in this folder should be shown the repairman to assist him in servicing the amplifier.

REVERBERATION — EFFECTIVE IN CHANNEL 2 ONLY

The Reverberation Unit must always be placed on a solid non-vibrating surface or footing when in operation.

Any sudden shock, jolt, or wiggle, when in use, will cause undesirable noise. The resultant clatter of an inadvertant shake or bump is annoying but not necessarily harmful. This delicate sensitivity to shock and vibration is a normal characteristic of the device.

No problem will be encountered while the unit is connected if supporting surface is solid and unit is not moved about. To avoid the unwanted noise, turn the reverberation unit off by pressing the foot switch.

BASS AND TREBLE TONE CONTROLS

A separate control has been provided for control of the bass or low frequencies and for the treble or high frequencies. The use of these two controls allows the player to obtain the maximum combinations of tone from a beautiful clear treble to a deep resonant bass. Setting the "BASS" control at maximum and the "TREBLE" at minimum, produces the deepest, fullest bass tone. Setting the "TREBLE" control at maximum and the "BASS" at minimum produces a chime-like tone rich in higher harmonics and will enable the artist to pick harmonics with greater ease. When both "BASS' and "TREBLE" controls are set at minimum the middle register predominates.

TREMOLO — EFFECTIVE IN CHANNEL 2 ONLY

The Tremolo effect adds another dimension to the Reverberation effect. It can be used either with or without reverberation at the players discretion. The Tremolo is turned on or off by the use of the foot switch. The Tremolo Frequency Range has been carefully set to cover a wide range of Tremolo effects. The Depth of the Tremolo is also variable being controlled by the Depth control.

OPERATION OF MICROPHONE

The high gain and high fidelity characteristics of this Amplifier, permit the use of most of the popular high impedance microphones for public address work. The microphone should be plugged into the Number One jack and it is not recommended that other instruments be used in conjunction with the microphone.

When using a microphone it is important that the Number 280 or similar shielded plug be attached to the cord. The ordinary phone plug with bakelite or other non-shielded cover is not suitable because the leads from the microphone must be completely shielded. Otherwise, objectionable hum will result. Figure A illustrates the proper way to connect the plug to the microphone cable.
To use the microphone, insert the plug in the Number One jack and advance the Loudness control until a feedback squeal or howl is produced on the loudspeaker. Reduce the Loudness control to just below the feedback point. This setting will vary considerably, depending upon the size of the room, its acoustical properties and the distance between the microphone and loudspeaker. Feedback is the limiting factor in all public address installations and is caused when the level of sound from the loudspeakers is sufficient to actuate the microphone. The general rule when setting up the equipment is to place the loudspeaker as far from the microphone as possible.



Figure A

EA26-RVT

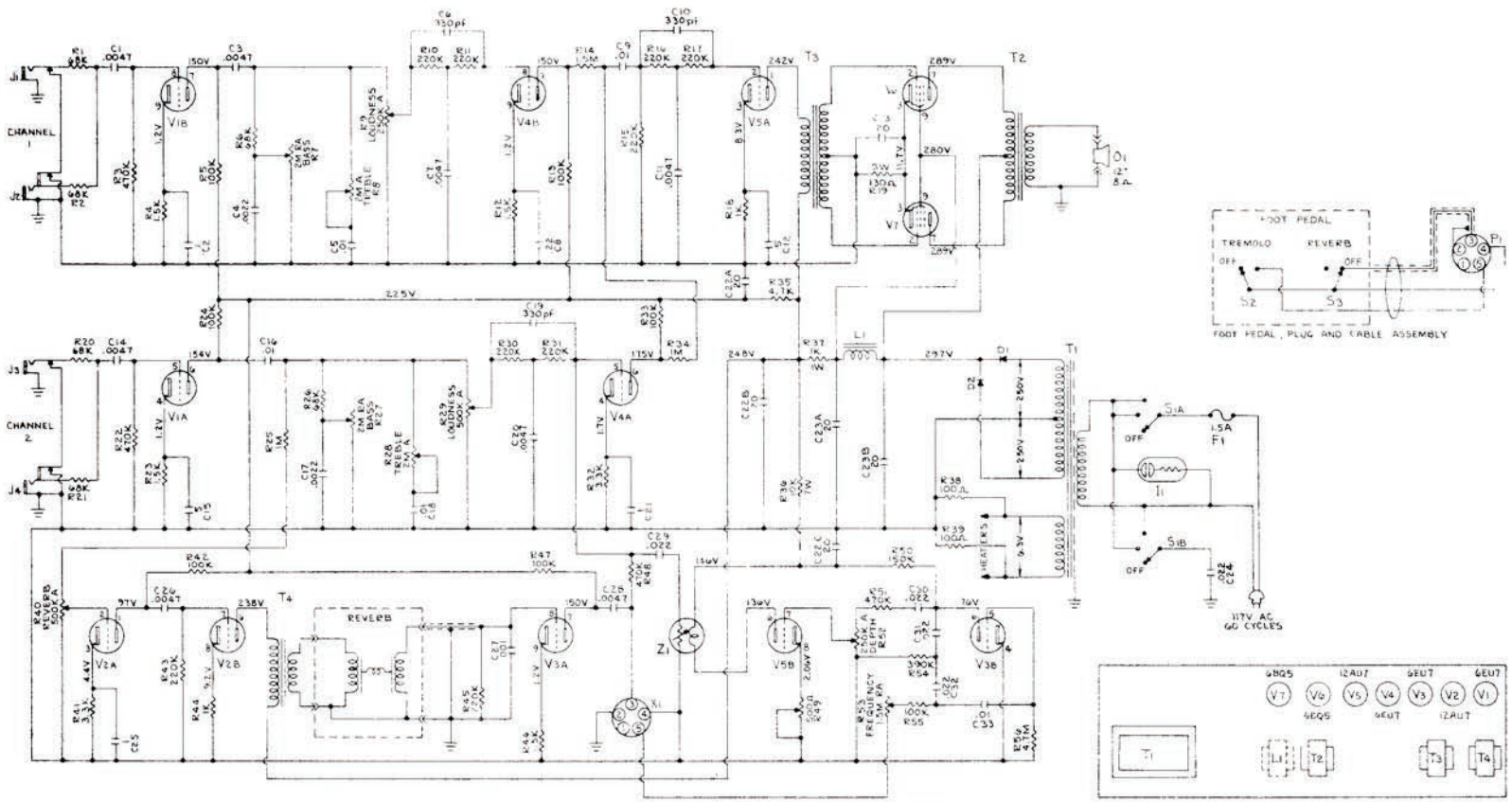

T1	TF-105P-1	Power Transformer
T2	TF-50L-0	Output Transformer
T3	TF-1001D-1	PP Driver Transformer
T4	TF-E6400	Reverb Transformer
L1	TF-1003 C	Filter Choke
S1A,B	SW-899-1	Switch - SPST Rotary
S2,S3	SW-82403	Switches - SPST
I1	PL-35R	Pilot Light (Neon) w/clip
X1	CN-78PCG-5	Foot Pedal Socket
P1	CN-91MPM-5L	Foot Pedal Plug
D1,D2	DI-404	Diode - 800 PIV

R9,R52	CBA-4008	Control - 250K, Audio (Loudness & Depth)
R8,R28	CBA-811-3202-1	Control - 2 meg, Audio (Treble)
R29,R40	CBA-4007	Control - 500K, Audio (Loudness & Reverb)
R53	CBA-311-3711-1	Control - 1.5 meg, RA (Frequency).
R7,R27	CBA-813-222-1	Control - 2 meg, RA (bass)
R43	CB-23351	Control - 500 ohm, WW

EPIPHONE

PATHFINDER

MODEL EA-28RVT AMPLIFIER

INSTRUCTIONS

EPIPHONE Inc., KALAMAZOO, MICHIGAN

REVERB UNIT UNPACKING INSTRUCTIONS

IMPORTANT — READ CAREFULLY BEFORE USE

CAUTION

The Reverb Unit has been carefully constructed. It is, however, a delicate electronic device. Treat it with the same care and respect given a TV set.

Avoid dropping, sudden jolts, or rough handling and it will give excellent service. This beautifully musical Reverberation effect is not to be confused with the repeating signal produced by the mechanical tape recorder style of echo units.

UNPACKING

Amplifiers are carefully packed to prevent damage in shipment. However, upon receipt of the amplifier, examine carefully to determine if there has been breakage of tubes or parts. If damage has occurred during shipment, call the Transportation Company immediately, and place a claim.

TUBES

Make certain all tubes are seated firmly into their respective sockets. Each tube is labeled for proper replacement should any tube be out of its socket. Be especially careful when inserting tubes to see that the pins on the tube are correctly aligned with the holes in the socket before pushing into place. Do not twist tube — push tube straight into socket. It is advisable to check tubes from time to time depending on amount of use and excellence of performance. *Be sure tubes are always returned to proper sockets and seated firmly.*

REVERB POWER UNIT SET UP INSTRUCTIONS

CAUTION

Damage to the amplifier will result if it is connected to an improper power source. This amplifier is designed to be operated on 105-125 volt, 50-60 cycle alternating current only. The voltage from the power lines should not exceed 125, and the frequency of the current should be either 50 or 60 cycles. When ready to use amplifier, insert the plug on the power cord into the electric outlet and move switch to "on." After approximately one minute for the tubes to heat, the amplifier is ready for use.

The Reverberation Unit must always be placed on a solid non-vibrating surface or footing when in operation.

Any sudden shock, jolt, or wiggle, when in use, will cause undesirable noise. The resultant clatter of an inadvertant shake or bump is annoying but not necessarily harmful. This delicate sensitivity to shock and vibration is a normal characteristic of the device.

No problem will be encountered while the unit is connected if supporting surface is solid and unit is not moved about. To avoid the unwanted noise, turn the reverberation unit off by pressing the foot switch.

FUSE

The fuse used in this Amplifier is a type 3AG of one ampere rating. DO NOT USE FUSES OF HIGHER RATING

TREMOLO

The Tremolo effect adds another dimension to the Reverberation effect. It can be used either with or without reverberation at the players discretion. The Tremolo is turned on or off by the use of the foot switch. The Tremolo Frequency Range has been carefully set to cover a wide range of Tremolo effects. The Depth of the Tremolo is also variable being controlled by the Depth control.

OPERATION OF MICROPHONE

The high gain and high fidelity characteristics of this Amplifier, permit the use of most of the popular high impedance microphones for public address work. The microphone should be plugged into the Number One jack and it is not recommended that other instruments be used in conjunction with the microphone.

When using a microphone it is important that the Number 280 or similar shielded plug be attached to the cord. The ordinary phone plug with bakelite or other non-shielded cover is not suitable because the leads from the microphone must be completely shielded. Otherwise, objectionable hum will result. Figure A illustrates the proper way to connect the plug to the microphone cable.
To use the microphone, insert the plug in the Number One jack and advance the Loudness control until a feedback squeal or howl is produced on the loudspeaker. Reduce the Loudness control to just below the feedback point. This setting will vary considerably, depending upon the size of the room, its acoustical properties and the distance between the microphone and loudspeaker. Feedback is the limiting factor in all public address installations and is caused when the level of sound from the loudspeakers is sufficient to actuate the microphone. The general rule when setting up the equipment is to place the loudspeaker as far from the microphone as possible.



Figure A

SERVICE

If the amplifier is in need of servicing, it should be taken to a reliable radio man. The electrical diagram in this folder should be shown the repairman to assist him in servicing the amplifier.

MONITOR JACK

This convenient jack is provided for extending the usefullness of the amplifier. Some of it's many uses include: — Use in tape recording; Use in driving additional amplifiers, feeding into Public Address systems; Use with Hi-Fi amplifiers. For best results the Monitor Jack should be fed into a High-impedance circuit.

EA25-RVT

R2,R3	Loudness & Reverb. Control, 2 meg audio taper	C-BA-811-3702
R4	Depth Control, 250K reversed audio	C-BA-811-3704
R5	Frequency Control, 500K reversed audio	C-BA-811-3705
R1	Tone Control, 1 meg audio taper	C-BA-811-3709

T1	Output Transformer	TF-18-01
T2	Power Transformer	TF-18P
T3	Reverberation Transformer	TF-E-6400
S1	Toggle Switch (on-off) with 2 nuts	SW-80994
(1)	S-20009 12" Speaker	S-20009

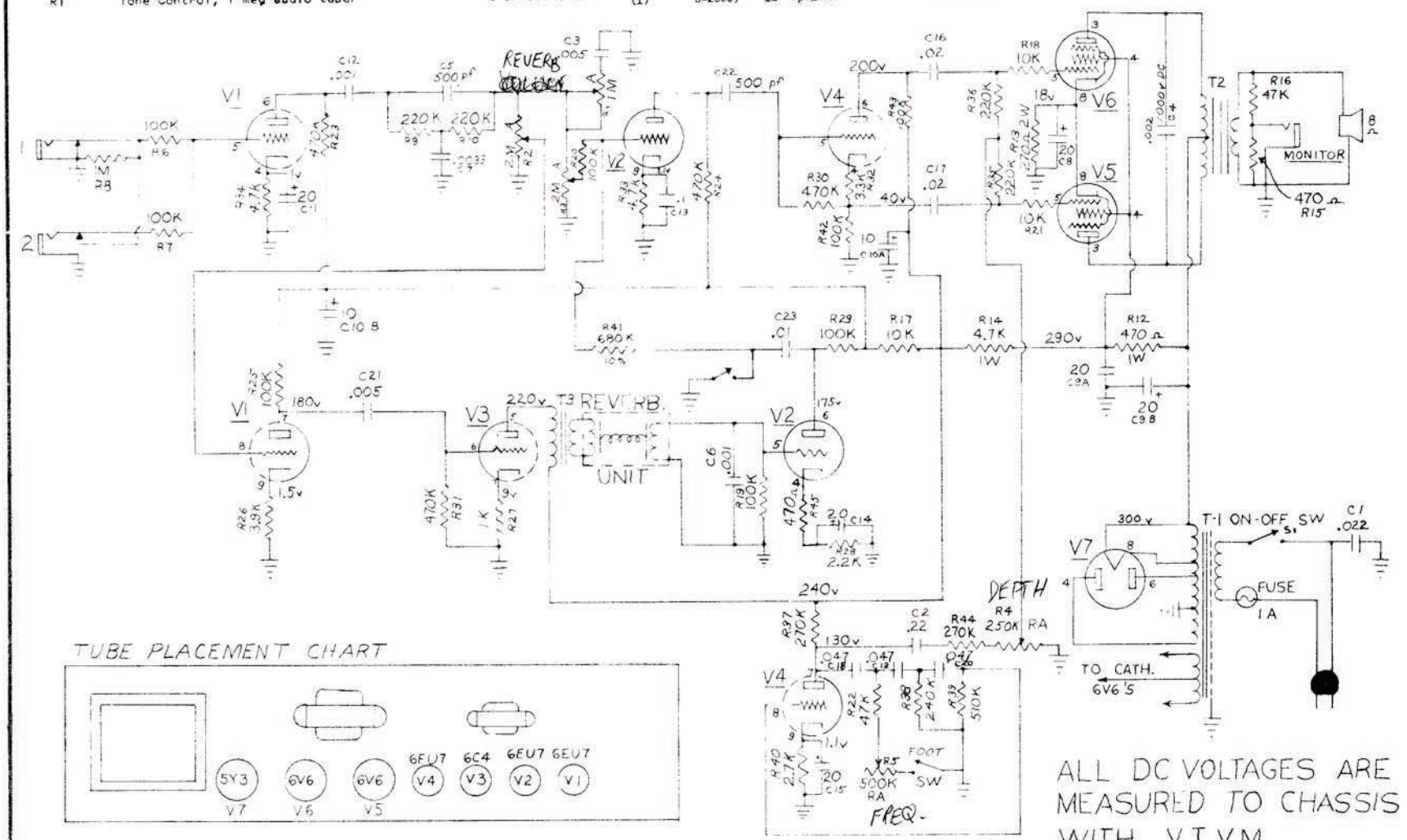

TUBE PLACEMENT CHART

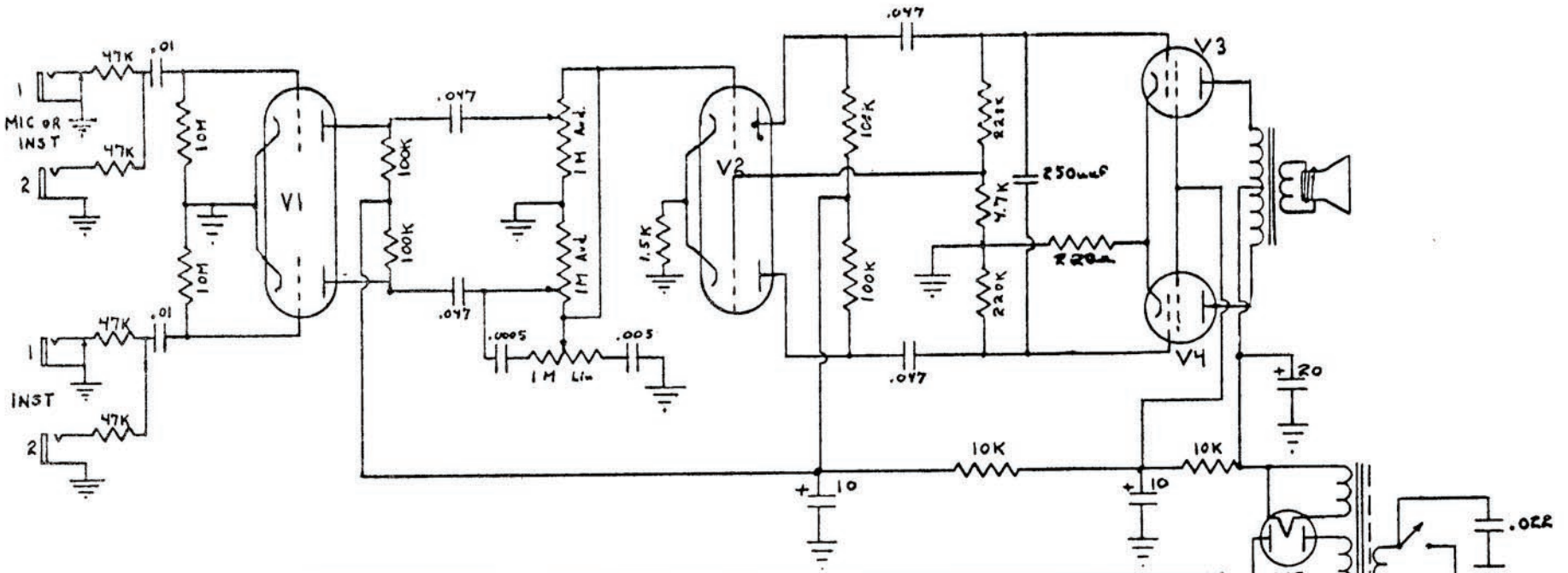

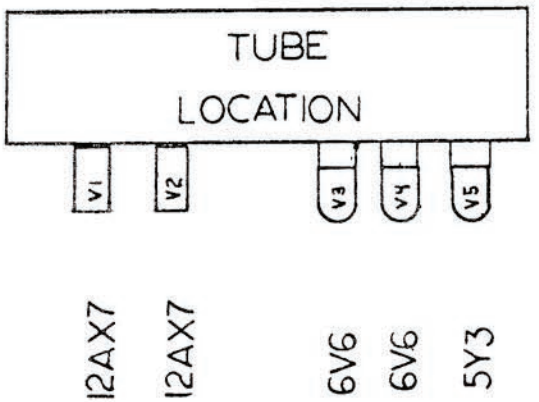

Tube Type	E_p	E_{sg}	E_g	E_k
V1 12AX7	120	—	-.65	0
V2 12AX7	170	—	0	1.6
V3 6V6	338	260	0	17.5
V4 6V6	338	260	0	17.5
V5 5Y3	320 RMS	—	—	345

DC Voltages to chassis with 11 meg VTVM

EA-30 TRIUMPH
EPIPHONE, INC.

EPIPHONE

COMET

MODEL EA-32RVT AMPLIFIER

INSTRUCTIONS

EPIPHONE Inc., KALAMAZOO, MICHIGAN

IMPORTANT — READ CAREFULLY BEFORE USE

CAUTION

The Reverb Unit has been carefully constructed. It is, however, a delicate electronic device. Treat it with the same care and respect given a TV set.

Avoid dropping, sudden jolts, or rough handling and it will give excellent service. This beautifully musical Reverberation effect is not to be confused with the repeating signal produced by the mechanical tape recorder style of echo units.

UNPACKING

Amplifiers are carefully packed to prevent damage in shipment. However, upon receipt of the amplifier, examine carefully to determine if there has been breakage of tubes or parts. If damage has occurred during shipment, call the Transportation Company immediately, and place a claim.

TUBES

Make certain all tubes are seated firmly into their respective sockets. Each tube is labeled for proper replacement should any tube be out of its socket. Be especially careful when inserting tubes to see that the pins on the tube are correctly aligned with the holes in the socket before pushing into place. Do not twist tube — push tube straight into socket. It is advisable to check tubes from time to time depending on amount of use and excellence of performance. *Be sure tubes are always returned to proper sockets and seated firmly.*

REVERB POWER UNIT SET UP INSTRUCTIONS

CAUTION

Damage to the amplifier will result if it is connected to an improper power source. This amplifier is designed to be operated on 105-125 volt, 50-60 cycle alternating current only. The voltage from the power lines should not exceed 125, and the frequency of the current should be either 50 or 60 cycles. When ready to use amplifier, insert the plug on the power cord into the electric outlet and move switch to "on." After approximately one minute for the tubes to heat, the amplifier is ready for use.

The Reverberation Unit must always be placed on a solid non-vibrating surface or footing when in operation.

Any sudden shock, jolt, or wiggle, when in use, will cause undesirable noise. The resultant clatter of an inadvertant shake or bump is annoying but not necessarily harmful. This delicate sensitivity to shock and vibration is a normal characteristic of the device.

No problem will be encountered while the unit is connected if supporting surface is solid and unit is not moved about. To avoid the unwanted noise, turn the reverberation unit off by pressing the foot switch.

FUSE

The fuse used in this Amplifier is a type 3AG of 1½ ampere rating.
DO NOT USE A FUSE OF HIGHER RATING.

TREMOLO

The Tremolo effect adds another dimension to the Reverberation effect. It can be used either with or without reverberation at the players discretion. The Tremolo is turned on or off by the use of the foot switch. The Tremolo Frequency Range has been carefully set to cover a wide range of Tremolo effects.

OPERATION OF MICROPHONE

The high gain and high fidelity characteristics of this Amplifier, permit the use of most of the popular high impedance microphones for public address work. The microphone should be plugged into the Number One jack and it is not recommended that other instruments be used in conjunction with the microphone.

When using a microphone it is important that the Number 280 or similar shielded plug be attached to the cord. The ordinary phone plug with bakelite or other non-shielded cover is not suitable because the leads from the microphone must be completely shielded. Otherwise, objectionable hum will result. Figure A illustrates the proper way to connect the plug to the microphone cable.
To use the microphone, insert the plug in the Number One jack and advance the Loudness control until a feedback squeal or howl is produced on the loudspeaker. Reduce the Loudness control to just below the feedback point. This setting will vary considerably, depending upon the size of the room, its acoustical properties and the distance between the microphone and loudspeaker. Feedback is the limiting factor in all public address installations and is caused when the level of sound from the loudspeakers is sufficient to actuate the microphone. The general rule when setting up the equipment is to place the loudspeaker as far from the microphone as possible.



Figure A

SERVICE

If the amplifier is in need of servicing, it should be taken to a reliable radio man. The electrical diagram in this folder should be shown the repairman to assist him in servicing the amplifier.

EA32-RVT

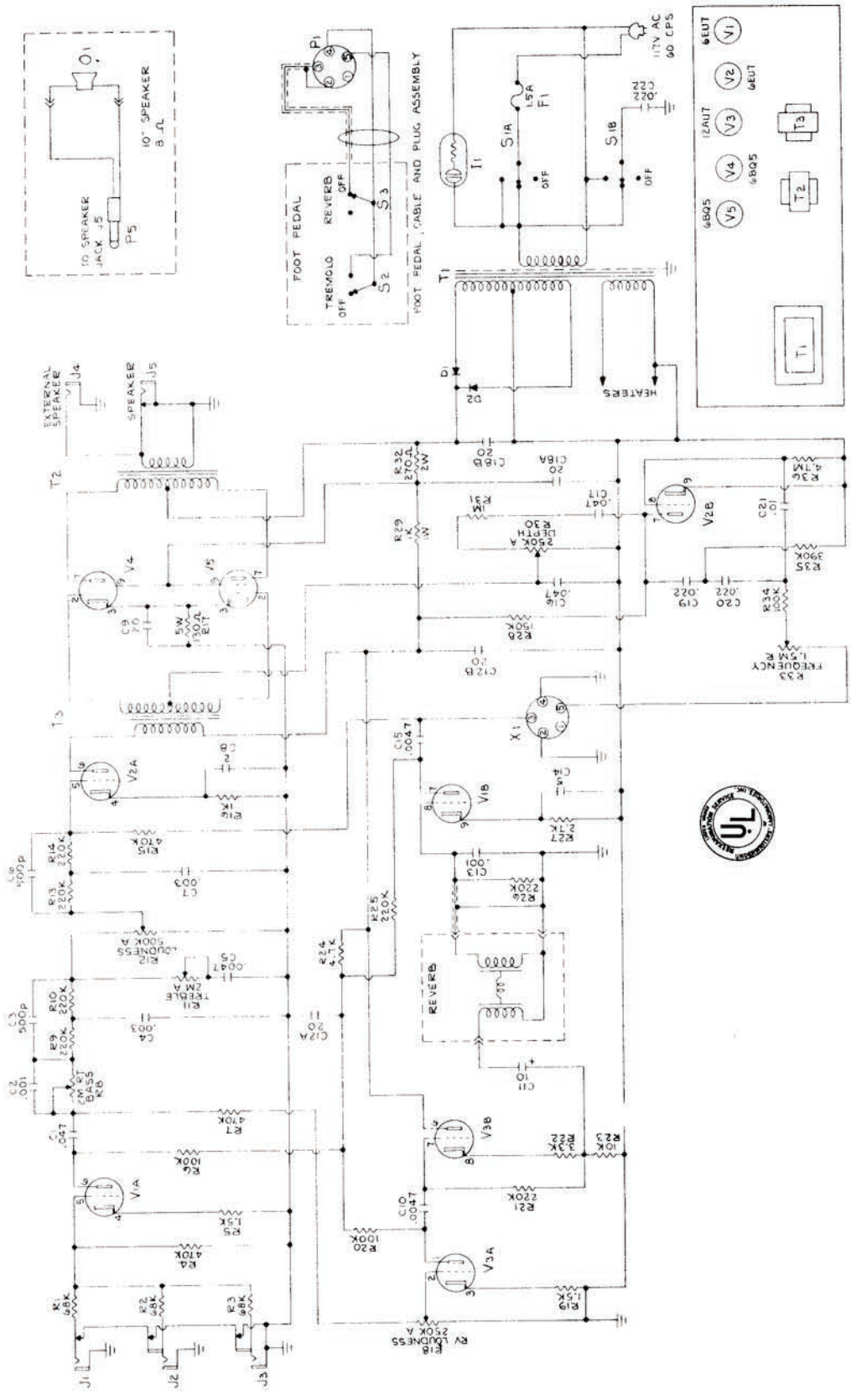

1-67 500 CPC

EPIPHONE

GALAXIE

MODEL EA-33RVT AMPLIFIER

INSTRUCTIONS

EPIPHONE Inc., KALAMAZOO, MICHIGAN

IMPORTANT — READ CAREFULLY BEFORE USE

CAUTION

The Reverb Unit has been carefully constructed. It is, however, a delicate electronic device. Treat it with the same care and respect given a TV set.

Avoid dropping, sudden jolts, or rough handling and it will give excellent service. This beautifully musical Reverberation effect is not to be confused with the repeating signal produced by the mechanical tape recorder style of echo units.

UNPACKING

Amplifiers are carefully packed to prevent damage in shipment. However, upon receipt of the amplifier, examine carefully to determine if there has been breakage of tubes or parts. If damage has occurred during shipment, call the Transportation Company immediately, and place a claim.

TUBES

Make certain all tubes are seated firmly into their respective sockets. Each tube is labeled for proper replacement should any tube be out of its socket. Be especially careful when inserting tubes to see that the pins on the tube are correctly aligned with the holes in the socket before pushing into place. Do not twist tube — push tube straight into socket. It is advisable to check tubes from time to time depending on amount of use and excellence of performance. *Be sure tubes are always returned to proper sockets and seated firmly.*

REVERB POWER UNIT SET UP INSTRUCTIONS

CAUTION

Damage to the amplifier will result if it is connected to an improper power source. This amplifier is designed to be operated on 105-125 volt, 50-60 cycle alternating current only. The voltage from the power lines should not exceed 125, and the frequency of the current should be either 50 or 60 cycles. When ready to use amplifier, insert the plug on the power cord into the electric outlet and move switch to "on." After approximately one minute for the tubes to heat, the amplifier is ready for use.

The Reverberation Unit must always be placed on a solid non-vibrating surface or footing when in operation.

Any sudden shock, jolt, or wiggle, when in use, will cause undesirable noise. The resultant clatter of an inadvertant shake or bump is annoying but not necessarily harmful. This delicate sensitivity to shock and vibration is a normal characteristic of the device.

No problem will be encountered while the unit is connected if supporting surface is solid and unit is not moved about. To avoid the unwanted noise, turn the reverberation unit off by pressing the foot switch.

FUSE

The fuse used in this Amplifier is a type 3AG Slo-Blo of one ampere rating.
DO NOT USE A FUSE OF HIGHER RATING.

TREMOLO

The Tremolo effect adds another dimension to the Reverberation effect. It can be used either with or without reverberation at the players discretion. The Tremolo is turned on or off by the use of the foot switch. The Tremolo Frequency Range has been carefully set to cover a wide range of Tremolo effects.

OPERATION OF MICROPHONE

The high gain and high fidelity characteristics of this Amplifier, permit the use of most of the popular high impedance microphones for public address work. The microphone should be plugged into the Number One jack and it is not recommended that other instruments be used in conjunction with the microphone.

When using a microphone it is important that the Number 280 or similar shielded plug be attached to the cord. The ordinary phone plug with bakelite or other non-shielded cover is not suitable because the leads from the microphone must be completely shielded. Otherwise, objectionable hum will result. Figure A illustrates the proper way to connect the plug to the microphone cable.
To use the microphone, insert the plug in the Number One jack and advance the Loudness control until a feedback squeal or howl is produced on the loudspeaker. Reduce the Loudness control to just below the feedback point. This setting will vary considerably, depending upon the size of the room, its acoustical properties and the distance between the microphone and loudspeaker. Feedback is the limiting factor in all public address installations and is caused when the level of sound from the loudspeakers is sufficient to actuate the microphone. The general rule when setting up the equipment is to place the loudspeaker as far from the microphone as possible.



Figure A

SERVICE

If the amplifier is in need of servicing, it should be taken to a reliable radio man. The electrical diagram in this folder should be shown the repairman to assist him in servicing the amplifier.

EA-33RVT

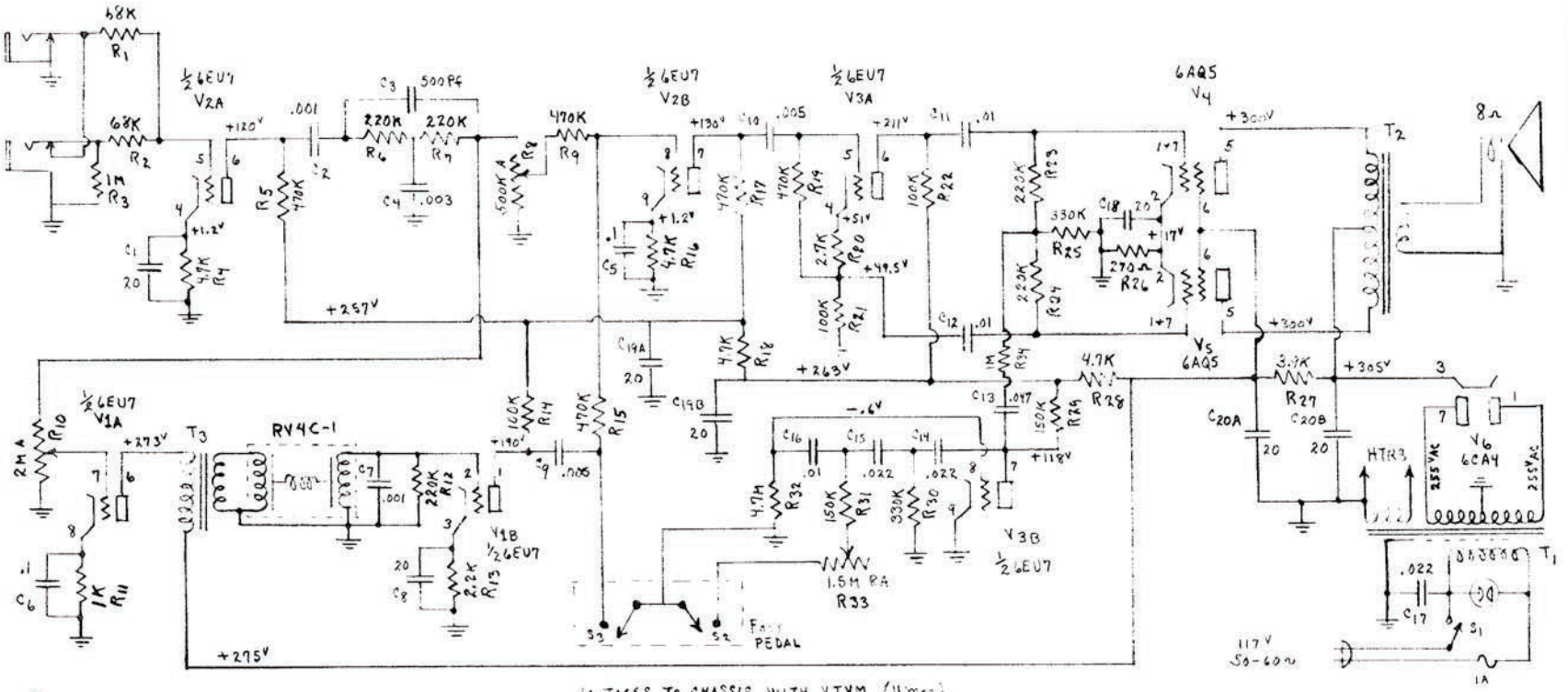

VOLTAGES TO CHASSIS WITH VTVM (11 meg)

T1 POWER TRANSFORMER TF 8A-P
T2 OUTPUT " TF 18-01
T3 DRIVER " TF E6400
SPEAKER 8Ω 2, 10" S20001
R8 VOLUME CONTROL 500K AUDIO TAPER
R10 REVERB VOLUME 2MEG "
R33 TREMOLO FREQUENCY 1.5M REV. AUDIO
S2, S3 SPST PUSH PUSH 3in.
REVERBERATION UNIT RV4C-1

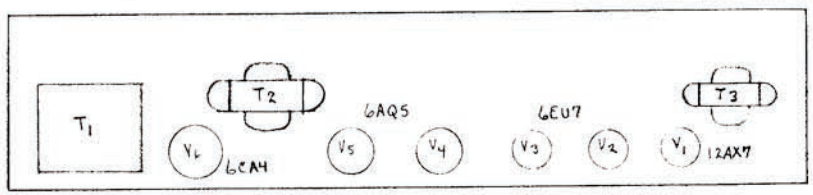

EPIPHONE

DEVON

MODEL EA-35 AMPLIFIER

INSTRUCTIONS

EPIPHONE Inc., KALAMAZOO, MICHIGAN

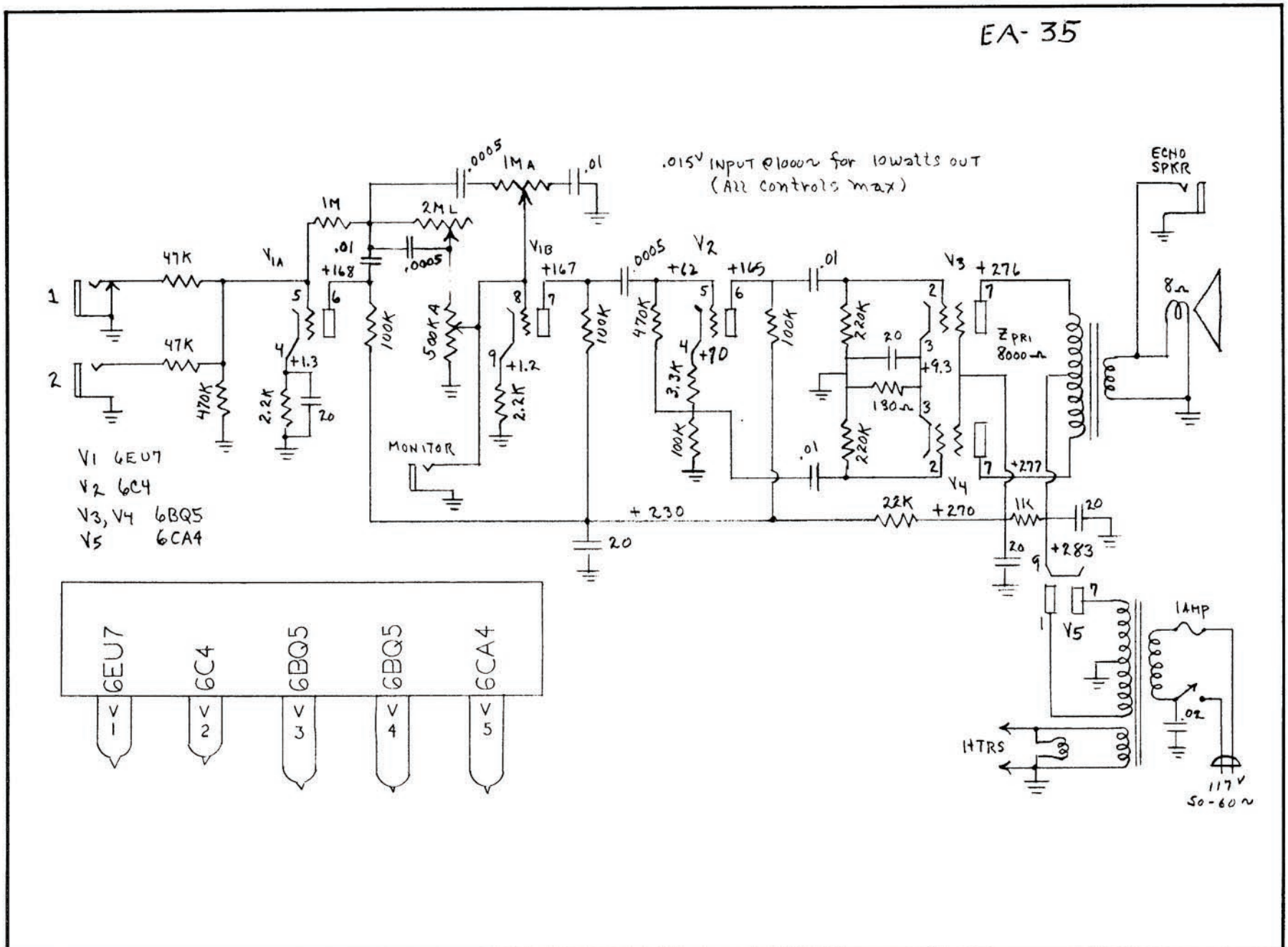
EA-35
.015V INPUT @1000~ for 10watts OUT
(All controls max)
ECHO SPKR
8Ω
1
2
47K
47K
470K
V1A
1M
2ML
.0005
1MA
.01
.01
+168
.0005
100K
500KA
V1B
+167
.0005
V2
+62
+165
.01
V3
+276
470K
3.3K
+70
100K
100K
220K
220K
20
+9.3
130Ω
ZPRI 8000Ω
+1.3
2.2K
20
+1.2
2.2K
MONITOR
.01
V4
+277
+230
22K
+270
1K
20
20
+283
20
V1 6EU7
V2 6C4
V3, V4 6BQ5
V5 6CA4
6EU7
6C4
6BQ5
6BQ5
6CA4
V1
V2
V3
V4
V5
1AMP
.02
HTRS
117V
50-60~

INSTRUCTIONS

CAUTION

Damage to the Amplifier will result if it is connected to an improper power source. This Amplifier is designed to be operated on 105 - 125 volt, 50 - 60 cycle alternating current ONLY. Check the voltage from the power lines to determine that it is not over 125 volts, and that the frequency of the current is either 50 or 60 cycles.

When ready to use power, plug the power cord into the electric outlet and move the switch to the ON position. Approximately one minute is required for the tubes to heat before the Amplifier is ready for use.

GENERAL

Amplifiers are carefully packed to prevent damage in shipment. However, upon receipt of the Amplifier, examine carefully to determine if there has been breakage of tubes or parts. If damage has occurred during shipment, the Transportation Company should be notified immediately, and a claim placed.

TUBES

Check tubes for proper positioning before placing the Amplifier in operation. All tubes have been tested and proved satisfactory before shipment.

OPERATION OF MICROPHONE

The high gain and high fidelity characteristics of this Amplifier, permit the use of most of the popular high impedance microphones for public address work. The microphone should be plugged into the Number One jack and it is not recommended that other instruments be used in conjunction with the microphone.

When using a microphone it is important that the Number 280 or similar shielded plug be attached to the cord. The ordinary phone plug with bakelite or other non-shielded cover is not suitable because the leads from the microphone must be completely shielded. Otherwise, objectionable hum will result. Figure A illustrates the proper way to connect the plug to the microphone cable.

To use the microphone, insert the plug in the Number One jack and advance the Volume control until a feedback squeal or howl is produced on the loudspeaker. Reduce the volume control to just below the feedback point. This setting will vary considerably, depending upon the size of the room, its acoustical properties and the distance between the microphone and loudspeaker. Feedback is the limiting factor in all public address installations and is caused when the level of sound from the loudspeakers is sufficient to actuate the microphone. The general rule when setting up the equipment is to place the loudspeaker as far from the microphone as possible.



Figure A

OPERATION OF INSTRUMENTS

This Amplifier is equipped with two input jacks for use with various types and styles of instruments and microphones. The input jacks are numbered 1. and 2. and when plugging in the instrument cords, they should be inserted in their respective jacks — that is, first instrument in the No. 1 jack, and second instrument in the No. 2 jack.

The gain for both jacks is adjusted by the control marked "Loudness". The tonal coloring can be varied over a wide range by use of the "Bass" and "Treble" tone controls.

MONITOR JACK

This convenient jack is provided for extending the usefullness of the amplifier. Some of it's many uses include: — Use in tape recording; Use in driving additional amplifiers, feeding into Public Address systems; Use with Hi-Fi amplifiers. For best results the Monitor Jack should be fed into a High-impedance circuit.

EXT. SPEAKER JACK

Provided for adding a wide dispersion of sound to the amplifier. An additional speaker may be plugged into this jack and, when the additional speaker is separated from this amplifier by several feet, a richer and fuller sound will result.

SERVICE

If the Amplifier is in need of servicing, consult a reliable radio man. The electrical diagram herein should be shown to the repairman to assist him in servicing the Amplifier.

FUSE

The fuse used in this Amplifier is a type 3AG Slo-Blo of one ampere rating.
DO NOT USE A FUSE OF HIGHER RATING.

EPIPHONE

DEVON -TREMOLO

MODEL EA-35T AMPLIFIER

INSTRUCTIONS

EPIPHONE Inc., KALAMAZOO, MICHIGAN

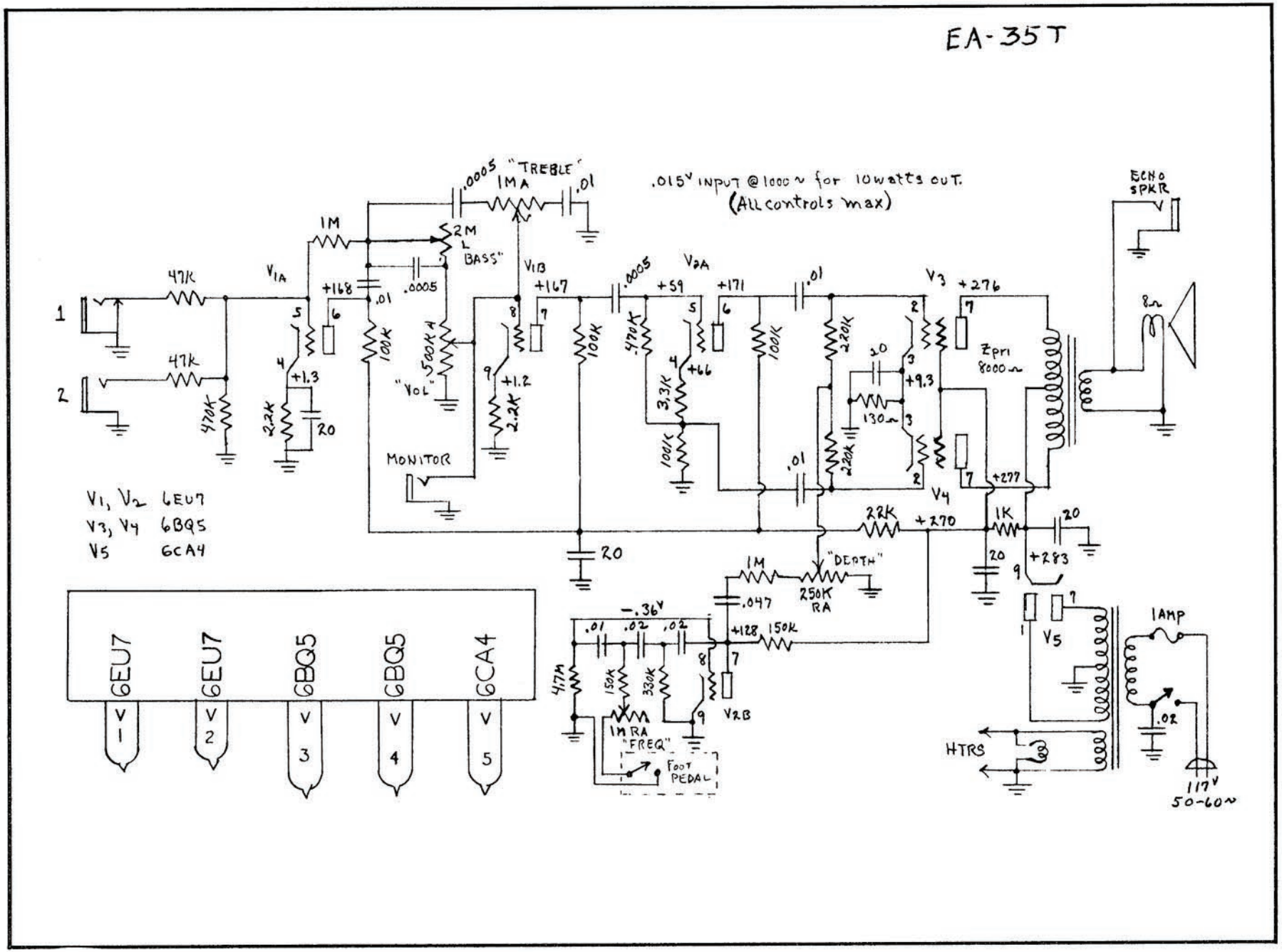
EA-35T
.015V INPUT @ 1000~ for 10 watts OUT.
(All controls max)
"TREBLE"
1MA
.0005
.01
1M
2M
L
"BASS"
.0005
V1A
V1B
V2A
V3
V4
V5
V2B
47K
47K
470K
2.2K
20
+1.3
+168
.01
100K
500KA
"VOL"
+1.2
2.2K
+167
100K
.0005
+59
470K
3.3K
+66
100K
+171
100K
.01
220K
220K
20
130Ω
+9.3
+276
Zpri
8000Ω
+277
22K
+270
1K
20
+283
20
20
MONITOR
V1, V2 6EU7
V3, V4 6BQ5
V5 6CA4
1M
"DEPTH"
250K
RA
.047
-.36V
.01
.02
.02
+128
150K
4.7M
150K
330K
1M RA
"FREQ"
FOOT
PEDAL
ECHO
SPKR
8Ω
1AMP
.02
HTRS
117V
50-60~
6EU7
6EU7
6BQ5
6BQ5
6CA4
V 1
V 2
V 3
V 4
V 5

INSTRUCTIONS

CAUTION

Damage to the Amplifier will result if it is connected to an improper power source. This Amplifier is designed to be operated on 105 - 125 volt, 50 - 60 cycle alternating current ONLY. Check the voltage from the power lines to determine that it is not over 125 volts, and that the frequency of the current is either 50 or 60 cycles.

When ready to use power, plug the power cord into the electric outlet and move the switch to the ON position. Approximately one minute is required for the tubes to heat before the Amplifier is ready for use.

GENERAL

Amplifiers are carefully packed to prevent damage in shipment. However, upon receipt of the Amplifier, examine carefully to determine if there has been breakage of tubes or parts. If damage has occurred during shipment, the Transportation Company should be notified immediately, and a claim placed.

TUBES

Check tubes for proper positioning before placing the Amplifier in operation. All tubes have been tested and proved satisfactory before shipment.

OPERATION OF MICROPHONE

The high gain and high fidelity characteristics of this Amplifier, permit the use of most of the popular high impedance microphones for public address work. The microphone should be plugged into the Number One jack and it is not recommended that other instruments be used in conjunction with the microphone.

When using a microphone it is important that the Number 280 or similar shielded plug be attached to the cord. The ordinary phone plug with bakelite or other non-shielded cover is not suitable because the leads from the microphone must be completely shielded. Otherwise, objectionable hum will result. Figure A illustrates the proper way to connect the plug to the microphone cable.

To use the microphone, insert the plug in the Number One jack and advance the Volume control until a feedback squeal or howl is produced on the loudspeaker. Reduce the volume control to just below the feedback point. This setting will vary considerably, depending upon the size of the room, its acoustical properties and the distance between the microphone and loudspeaker. Feedback is the limiting factor in all public address installations and is caused when the level of sound from the loudspeakers is sufficient to actuate the microphone. The general rule when setting up the equipment is to place the loudspeaker as far from the microphone as possible.



Figure A

OPERATION OF INSTRUMENTS

This Amplifier is equipped with two input jacks for use with various types and styles of instruments and microphones. The input jacks are numbered 1. and 2. and when plugging in the instrument cords, they should be inserted in their respective jacks — that is, first instrument in the No. 1 jack, and second instrument in the No. 2 jack.

The gain for both jacks is adjusted by the control marked "Loudness". The tonal coloring can be varied over a wide range by use of the "Bass" and "Treble" tone controls.

MONITOR JACK

This convenient jack is provided for extending the usefullness of the amplifier. Some of it's many uses include: — Use in tape recording; Use in driving additional amplifiers, feeding into Public Address systems; Use with Hi-Fi amplifiers. For best results the Monitor Jack should be fed into a High-impedance circuit.

EXT. SPEAKER JACK

Provided for adding a wide dispersion of sound to the amplifier. An additional speaker may be plugged into this jack and, when the additional speaker is separated from this amplifier by several feet, a richer and fuller sound will result.

TREMOLO

The Tremolo effect is turned on and off by means of a Push Type Foot Switch. The Tremolo frequency of the Amplifier is controlled by the Variable Control marked "Frequency." The speeds have been carefully set to cover a wide range of Tremolo effects. The depth of the Tremolo is also variable being controlled by the "Depth" Control.

SERVICE

If the Amplifier is in need of servicing, consult a reliable radio man. The electrical diagram herein should be shown to the repairman to assist him in servicing the Amplifier.

FUSE

The fuse used in this Amplifier is a type 3AG Slo-Blo of one ampere rating.
DO NOT USE A FUSE OF HIGHER RATING.

EPIPHONE

PACEMAKER
MODEL EA-50 AMPLIFIER

INSTRUCTIONS

EPIPHONE Inc., KALAMAZOO, MICHIGAN

EPIPHONE

PACEMAKER
MODEL EA-50 AMPLIFIER

INSTRUCTIONS

EPIPHONE Inc., KALAMAZOO, MICHIGAN

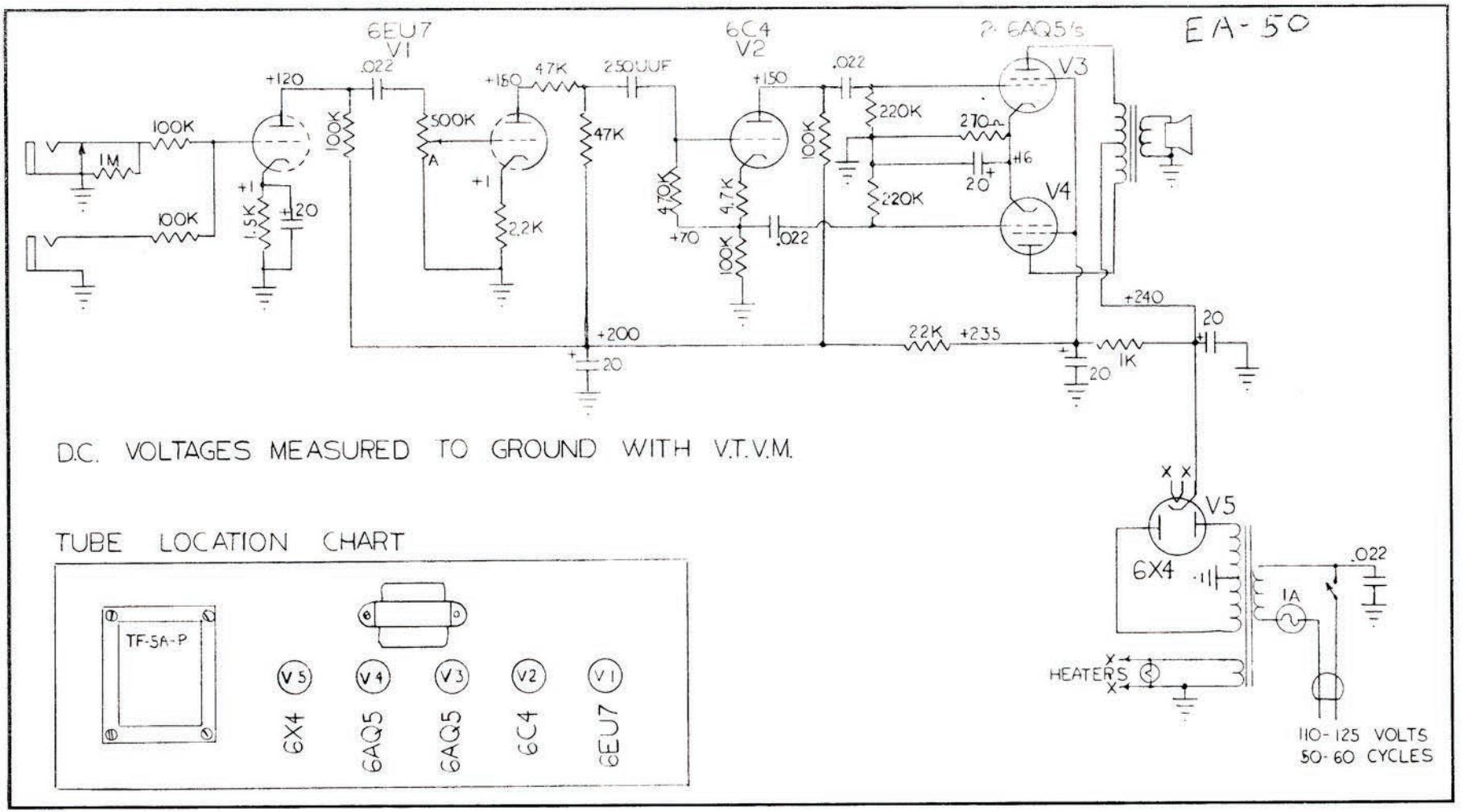

INSTRUCTIONS

When only one instrument is used, plug into No. 1 input jack.

This amplifier is designed for 105-125 volt, 50-60 cycle current. Damage will result if connected to improper power source.

Use the above schematic to facilitate service by a reliable radio man.

Do not use higher rating fuse than one ampere, Slo-Blo, type 3 A.G.

This amplifier was carefully checked and in good playing condition when shipped. If damaged when received call transportation company immediately and place claim.

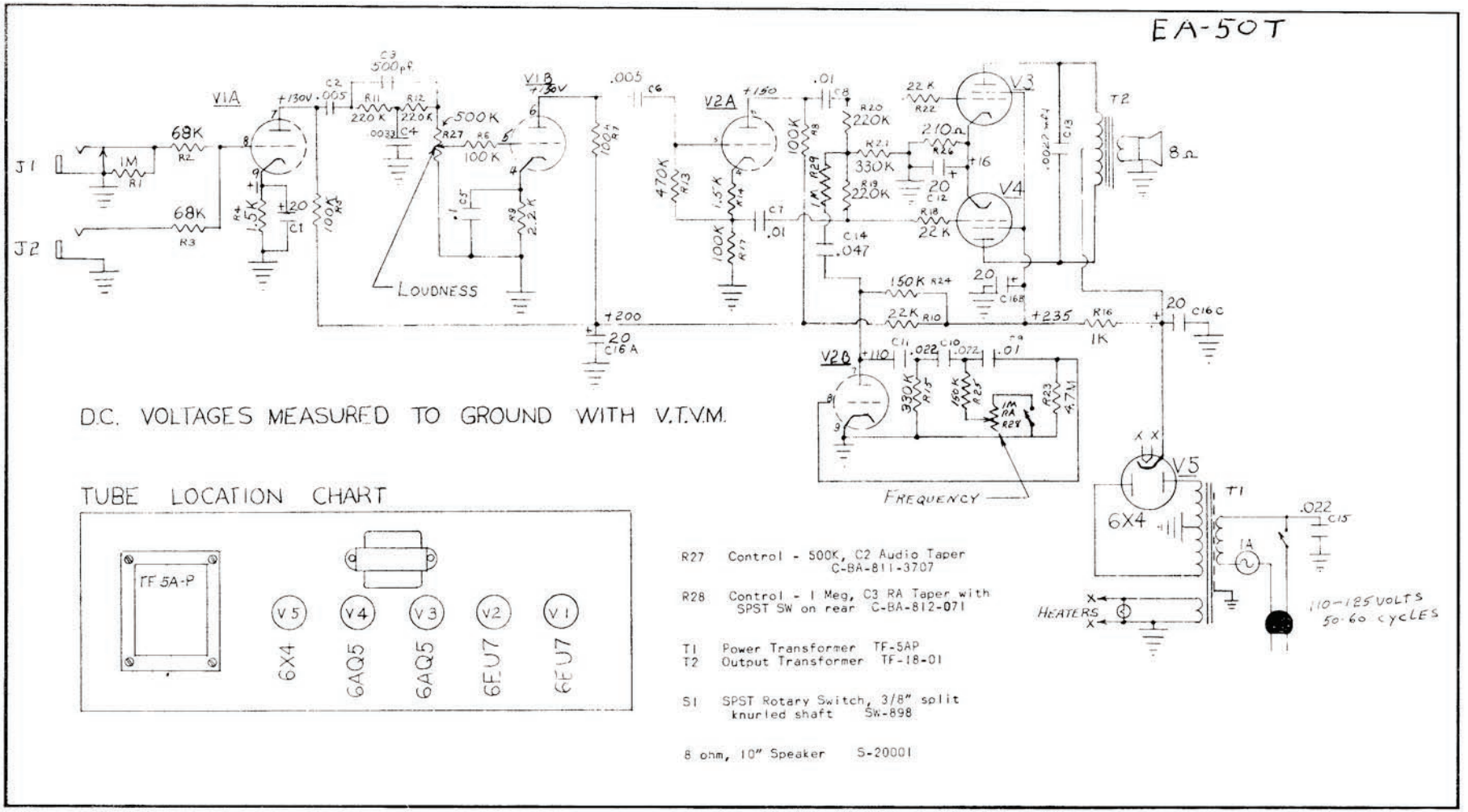

INSTRUCTIONS

When only one instrument is used, plug into No. 1 input jack.

The Tremolo effect is turned on by the Pointer knob marked "Frequency" located on the Control Panel. The speeds have been set to cover a wide range of Tremolo effects.

This amplifier is designed for 105-125 volt, 50-60 cycle current. Damage will result if connected to improper power source.

Use the above schematic to facilitate service by a reliable radio man.

Do not use higher rating fuse than one ampere, Slo-Blo, type 3 A.G.

This amplifier was carefully checked and in good playing condition when shipped. If damaged when received call transportation company immediately and place claim.

EPIPHONE

RIVOLI

MODEL EA-65 AMPLIFIER

"WITH PHOTON POWER CONTROL"

Patent Applied For

INSTRUCTIONS

EPIPHONE Inc., KALAMAZOO, MICHIGAN

UNPACKING

Amplifiers are carefully packed to prevent damage in shipment. However, upon receipt of the amplifier, examine carefully to determine if there has been breakage of tubes or parts. If damage has occurred during shipment, call the Transportation Company immediately, and place a claim.

CAUTION

Damage to the amplifier will result if it is connected to an improper power source. This amplifier is designed to be operated on 105-125 volt, 50-60 cycle alternating current only. The voltage from the power lines should not exceed 125, and the frequency of the current should be either 50 or 60 cycles. When ready to use power, insert the plug on the power cord into the electric outlet and move switch to "on." After approximately one minute for the tubes to heat, the amplifier is ready for use.

TUBES

Make certain all tubes are seated firmly into their respective sockets. Each tube is labeled for proper replacement should any tube be out of its socket. Be especially careful when inserting tubes to see that the pins on the tube are correctly aligned with the holes in the socket before pushing into place. Do not twist tube — push tube straight into socket. It is advisable to check tubes from time to time depending on amount of use and excellence of performance. *Be sure tubes are always returned to proper sockets and seated firmly.*

OPERATION OF INSTRUMENTS

This Amplifier is equipped with two input jacks for use with various types and styles of instruments and microphones. The input jacks are numbered 1. and 2. and when plugging in the instrument cords, they should be inserted in their respective jacks — that is, first instrument in the No. 1 jack, and second instrument in the No. 2 jack.

The gain for both jacks is adjusted by the control marked "Loudness". The tonal coloring can be varied over a wide range by use of the "Bass" and "Treble" tone controls.

A.C. POWER-POLARITY SWITCH

A convenient switch has been provided for performing a total of three functions, turning the amplifier on and off, putting the amplifier in "Standby" and selecting the proper polarity of the power source which reduces the A.C. hum and other extraneous noises to a minimum. In the "Standby" position the amplifier is kept "warmed up" and ready to play at the instant the switch is advanced to the "On" positions. Two "On" positions have been provided. The hum and hiss level on one of the "On" positions will be noticeably lower — this is the correct "Polarity" for using the amplifier.

In locations of extremely high noise levels, clipping the "Ground Clip" to a grounded object will greatly reduce objectionable noise and hum.

FUSE

The fuse used in this Amplifier is a type 3AG of three amperes rating.
DO NOT USE A FUSE OF HIGHER RATING.

SERVICE

If the amplifier is in need of servicing, it should be taken to a reliable radio man. The electrical diagram in this folder should be shown the repairman to assist him in servicing the amplifier.

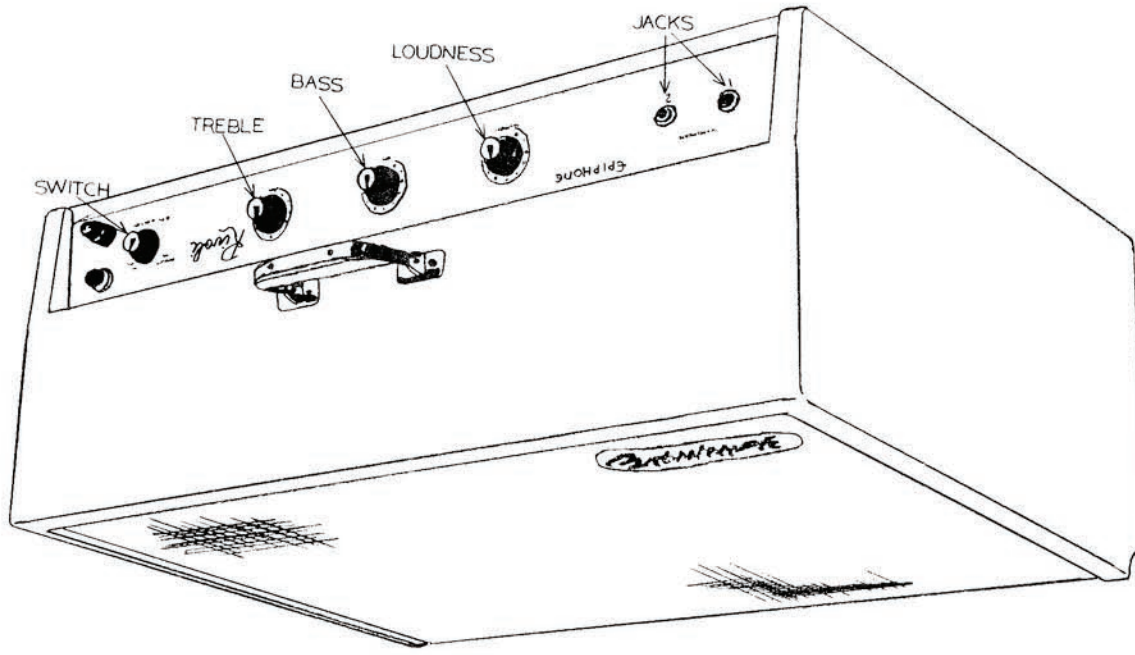
JACKS
LOUDNESS
BASS
TREBLE
SWITCH
EPIPHONE

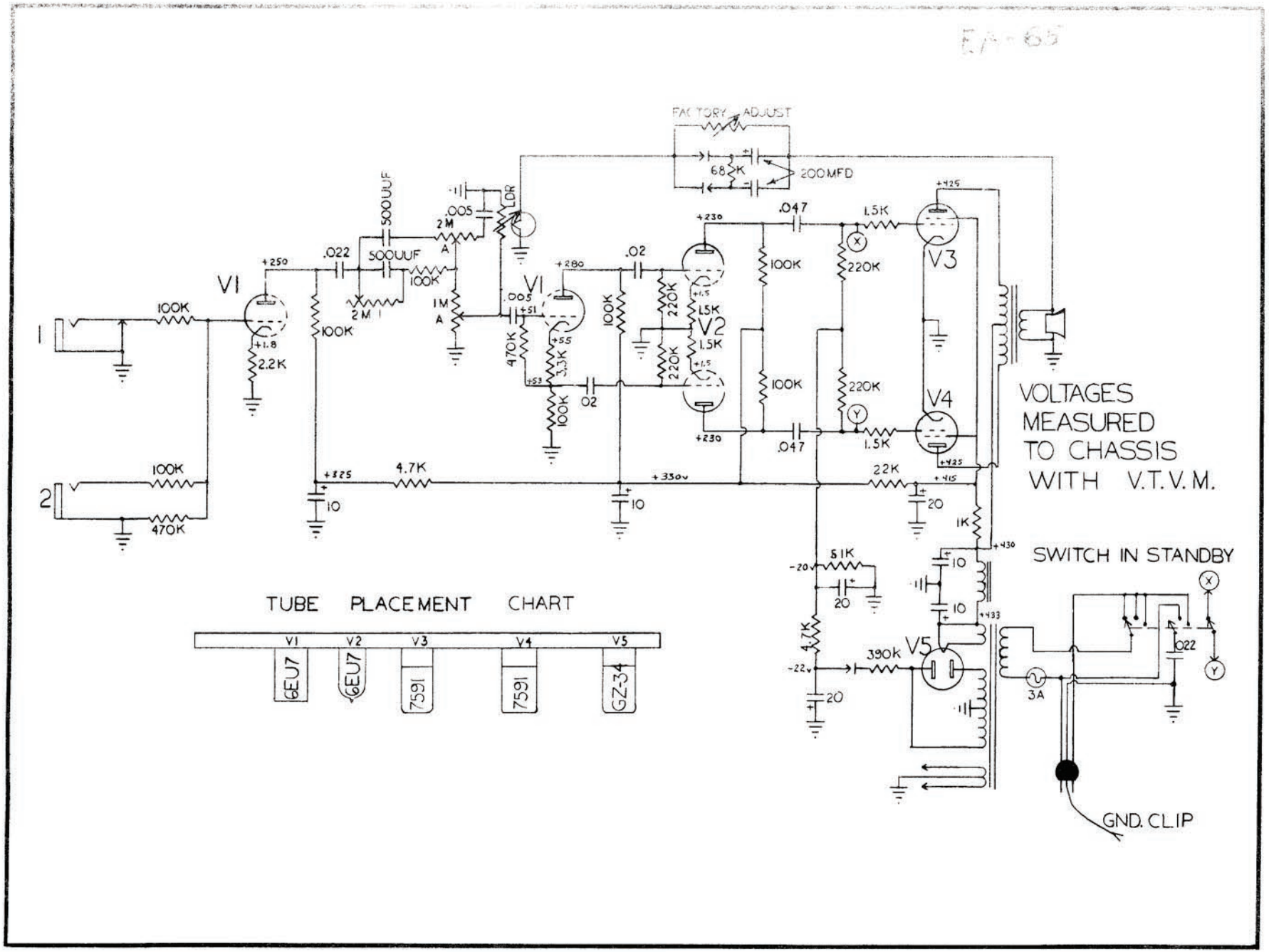
EA-65
FACTORY ADJUST
68K
200MFD
LDR
500UUF
500UUF
.005
2M
A
.022
100K
2M
1M
A
V1
+250
+1.8
2.2K
100K
100K
470K
1
2
+325
4.7K
10
+280
.005
+51
470K
+55
3.3K
+53
100K
.02
100K
.02
220K
220K
+1.5
1.5K
V2
1.5K
+1.5
+230
+230
100K
100K
.047
.047
1.5K
220K
220K
1.5K
+425
V3
V4
+425
+330v
22K
+415
20
1K
+430
10
10
+433
51K
-20v
20
4.7K
-22v
390k
V5
20
3A
.022
GND. CLIP
SWITCH IN STANDBY
VOLTAGES
MEASURED
TO CHASSIS
WITH V.T.V.M.
TUBE PLACEMENT CHART
V1
V2
V3
V4
V5
6EU7
6EU7
7591
7591
GZ-34

EA-70

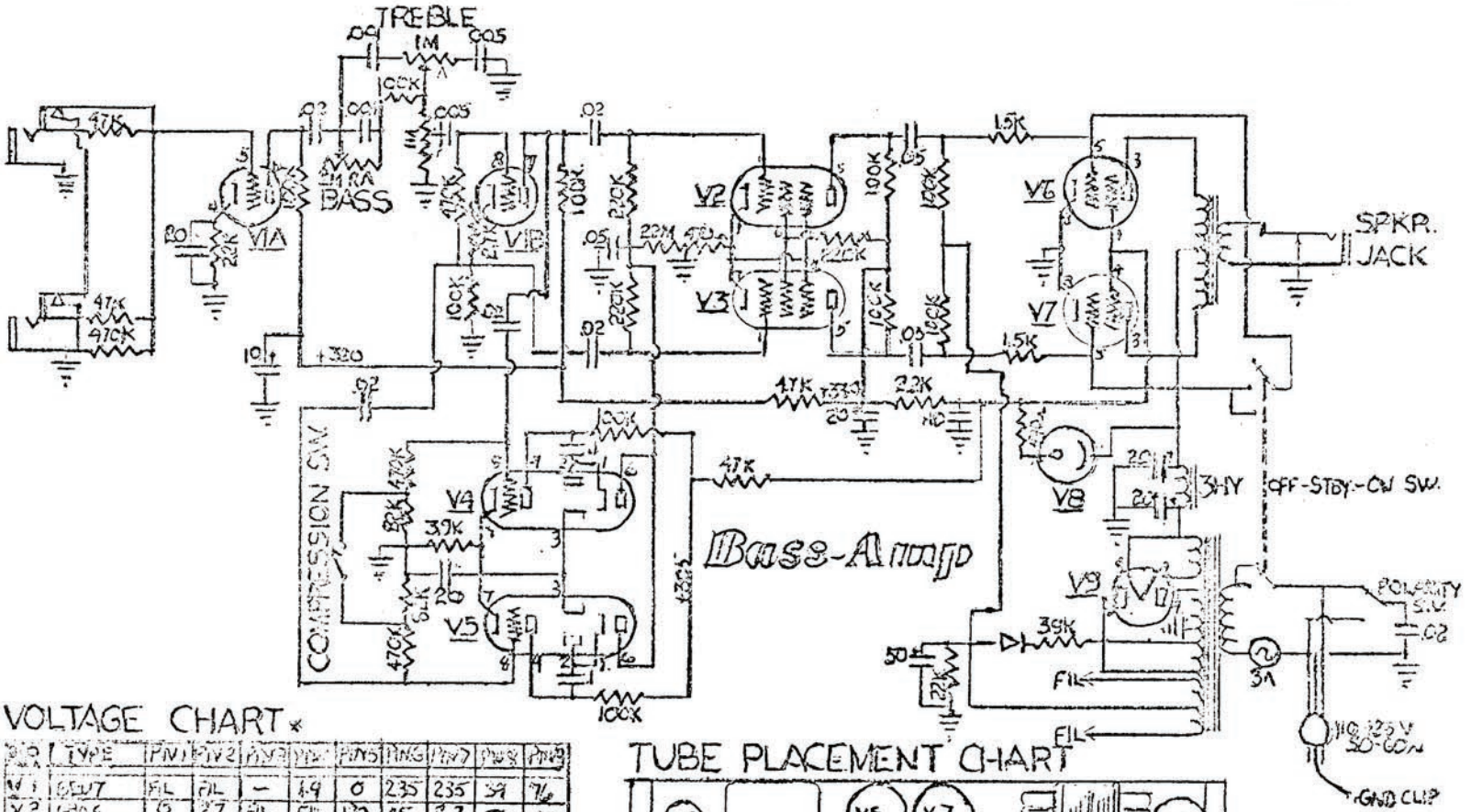

VOLTAGE CHART *

TUBE	TYPE	PIN 1	PIN 2	PIN 3	PIN 4	PIN 5	PIN 6	PIN 7	PIN 8	PIN 9
V1	6BW7	FIL	FIL	—	1.9	0	235	235	59	7.6
V2	6BD6	0	27	FIL	FIL	120	95	2.7	—	—
V3	6BD6	0	27	FIL	FIL	120	95	2.7	—	—
V4	6BW8	1.6	1.6	3.6	FIL	FIL	0	3.6	0	260
V5	6BW8	1.6	1.6	3.6	FIL	FIL	0	3.6	0	260
V6	6BQ6GA	GND	FIL	423	345	335	—	FIL	GND	—
V7	6BQ6GA	GND	FIL	423	345	335	—	FIL	GND	—
V8	0C3	425	—	—	—	—	—	350	—	—
V9	GZ34	GND	FIL	—	350	—	350	—	430	—

* ALL DC VOLTAGES MEASURED TO CHASSIS WITH V.T.V.M.

TUBE PLACEMENT CHART

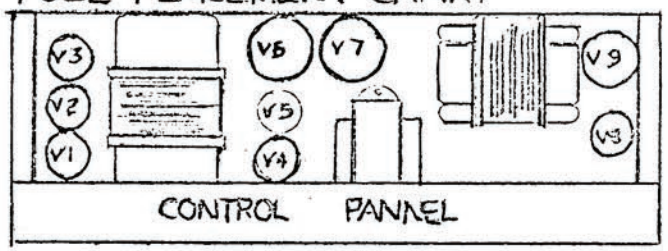

EPIPHONE

CONSTELLATION V

BASS AMP

MODEL EA-71 AMPLIFIER

INSTRUCTIONS

EPIPHONE Inc., KALAMAZOO, MICHIGAN

UNPACKING

Amplifiers are carefully packed to prevent damage in shipment. However, upon receipt of the amplifier, examine carefully to determine if there has been breakage of tubes or parts. If damage has occurred during shipment, call the Transportation Company immediately, and place a claim.

CAUTION

Damage to the amplifier will result if it is connected to an improper power source. This amplifier is designed to be operated on 105-125 volt, 50-60 cycle alternating current only. The voltage from the power lines should not exceed 125, and the frequency of the current should be either 50 or 60 cycles. When ready to use amplifier, insert the plug on the power cord into the electric outlet and move switch to "on." After approximately one minute for the tubes to heat, the amplifier is ready for use.

SET UP INSTRUCTIONS

A set of 4 heavy duty casters are furnished with this amplifier for ease of moving it from one place to another. They are detached from the amplifier at time of shipment and are taped to the amplifier cabinet in a black vinyl bag. They can be easily attached or detached as needed. When playing this amplifier at relatively high power output it is suggested the casters be removed to eliminate the possibility of synthetic vibrations or rattles.

A.C. POWER-POLARITY SWITCH

A convenient switch has been provided for performing a total of three functions, turning the amplifier on and off, putting the amplifier in "Standby" and selecting the proper polarity of the power source which reduces the A.C. hum and other extraneous noises to a minimum. In the "Standby" position the amplifier is kept "warmed up" and ready to play at the instant the switch is advanced to the "On" positions. Two "On" positions have been provided. The hum and hiss level on one of the "On" positions will be noticeably lower — this is the correct "Polarity" for using the amplifier.

As an added convenience to the artist this amplifier is equipped with a "Standby pilot light" as well as the "Regular pilot light". When the "Amber" light is on, the amplifier is in "Standby"; when the "Red" light is on the amplifier is "On" and ready to play.

FUSE

The fuse used in this Amplifier is a type 3 AG Slo-Blo of two amperes rating. DO NOT USE FUSES OF HIGHER RATING.

SERVICE

If the amplifier is in need of servicing, it should be taken to a reliable radio man. The electrical diagram in this folder should be shown to the repairman to assist him in servicing the amplifier.

TILT LEG

This amplifier is equipped with a "Tilt Leg" which allows the artist to change the angle of sound dispersion. See Figure 1.

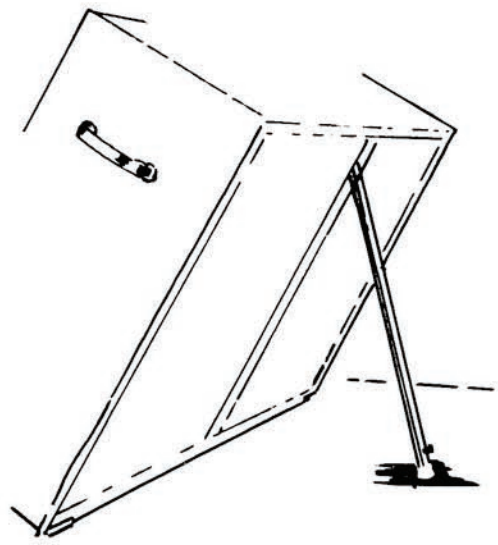

FIGURE 1.

OPERATION OF INSTRUMENTS

This Amplifier is equipped with two input jacks for use with various types and styles of instruments.

The gain for both jacks is adjusted by the control marked "Loudness". The tonal coloring can be varied by use of the "Bass" and "Treble" tone, controls. The "Bass" and "Treble" controls supply the artist, timbre adjustment. Proper setting will enhance the quality and power of the bass tones.

CONVENIENCE OUTLET

The convenience outlet, located on the back of the amplifier chassis, is separately fused with a type 3 AG, 3 ampere fuse. This outlet may be used for any accessory using less than three amperes, such as a tape recorder, reverberation and reverb/echo devices or a second amplifier.

EA-71

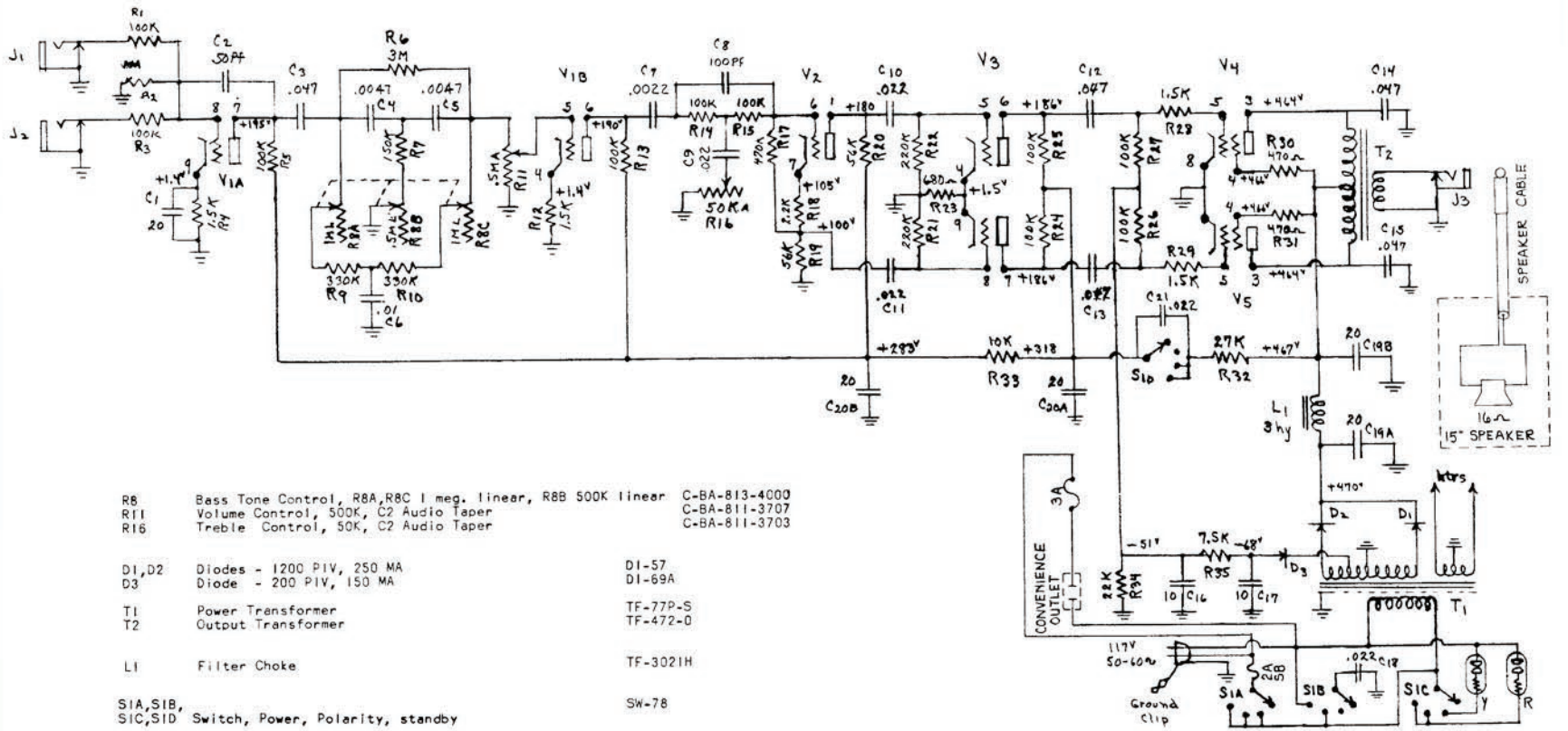

R8	Bass Tone Control, R8A,R8C 1 meg. linear, R8B 500K linear	C-BA-813-4000
R11	Volume Control, 500K, C2 Audio Taper	C-BA-811-3707
R16	Treble Control, 50K, C2 Audio Taper	C-BA-811-3703
D1,D2	Diodes - 1200 PIV, 250 MA	DI-57
D3	Diode - 200 PIV, 150 MA	DI-69A
T1	Power Transformer	TF-77P-S
T2	Output Transformer	TF-472-O
L1	Filter Choke	TF-3021H
S1A,S1B, S1C,S1D	Switch, Power, Polarity, standby	SW-78
	15" Speaker, 16 ohm, 40 cycle	S-0127

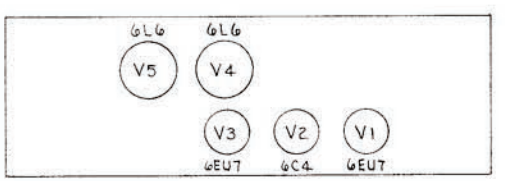

DC VOLTAGES TO CHASSIS WITH V.T.V.M.
CAPACITORS IN MFD EXCEPT WHERE NOTED.

EPIPHONE

CONSTELLATION

BASS AMP

MODEL EA-72 AMPLIFIER

INSTRUCTIONS

EPIPHONE Inc., KALAMAZOO, MICHIGAN

UNPACKING

Amplifiers are carefully packed to prevent damage in shipment. However, upon receipt of the amplifier, examine carefully to determine if there has been breakage of tubes or parts. If damage has occurred during shipment, call the Transportation Company immediately, and place a claim.

CAUTION

Damage to the amplifier will result if it is connected to an improper power source. This amplifier is designed to be operated on 105-125 volt, 50-60 cycle alternating current only. The voltage from the power lines should not exceed 125, and the frequency of the current should be either 50 or 60 cycles. When ready to use amplifier, insert the plug on the power cord into the electric outlet and move switch to "on." After approximately one minute for the tubes to heat, the amplifier is ready for use.

SET UP INSTRUCTIONS

A set of 4 heavy duty casters are furnished with this amplifier for ease of moving it from one place to another. They are detached from the amplifier at time of shipment and are taped to the amplifier cabinet in a brown vinyl bag. They can be easily attached or detached as needed. When playing this amplifier at relatively high power output it is suggested the casters be removed to eliminate the possibility of synthetic vibrations or rattles.

The Piggy Back amplifier may be played on or off the speaker cabinet. When playing it on the speaker cabinet be sure it is fastened securely by the locking fixtures provided.

SPEAKER CORD CONNECTION

The speaker cord is packed with the A. C. supply cord. One end must be plugged into the speaker jack located on the speaker cabinet back panel and the other end should be plugged into the speaker jack located on the back of the amplifier chassis.

A.C. POWER-POLARITY SWITCH

A convenient switch has been provided for performing a total of three functions, turning the amplifier on and off, putting the amplifier in "Standby" and selecting the proper polarity of the power source which reduces the A.C. hum and other extraneous noises to a minimum. In the "Standby" position the amplifier is kept "warmed up" and ready to play at the instant the switch is advanced to the "On" positions. Two "On" positions have been provided. The hum and hiss level on one of the "On" positions will be noticeably lower — this is the correct "Polarity" for using the amplifier.

In locations of extremely high noise levels, clipping the "Ground Clip" to a grounded object will greatly reduce objectionable noise and hum.

As an added convenience to the artist this amplifier is equipped with a "Standby pilot light" as well as the "Regular pilot light". When the "Amber" light is on, the amplifier is in "Standby"; when the "Red" light is on the amplifier is "On" and ready to play.

TILT LEG

This amplifier is equipped with a "Tilt Leg" which allows the artist to change the angle of sound dispersion. See Figure 1.

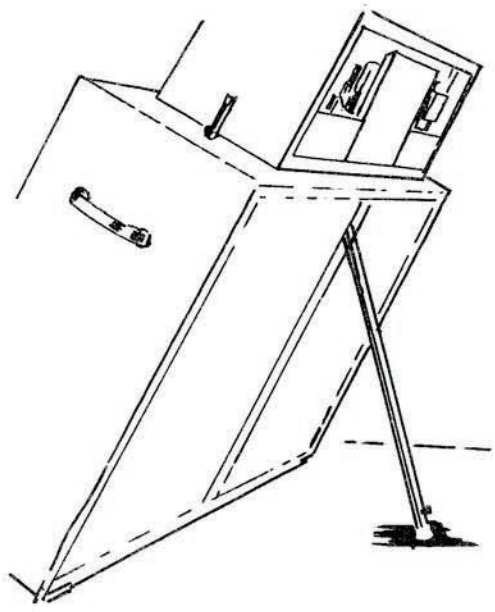

FIGURE 1.

OPERATION OF INSTRUMENTS

This Amplifier is equipped with two input jacks for use with various types and styles of instruments.

The gain for both jacks is adjusted by the control marked "Loudness". The tonal coloring can be varied by use of the "Bass" and "Treble" tone, controls. The "Bass" and "Treble" controls supply the artist, timbre adjustment. Proper setting will enhance the quality and power of the bass tones.

EA-72

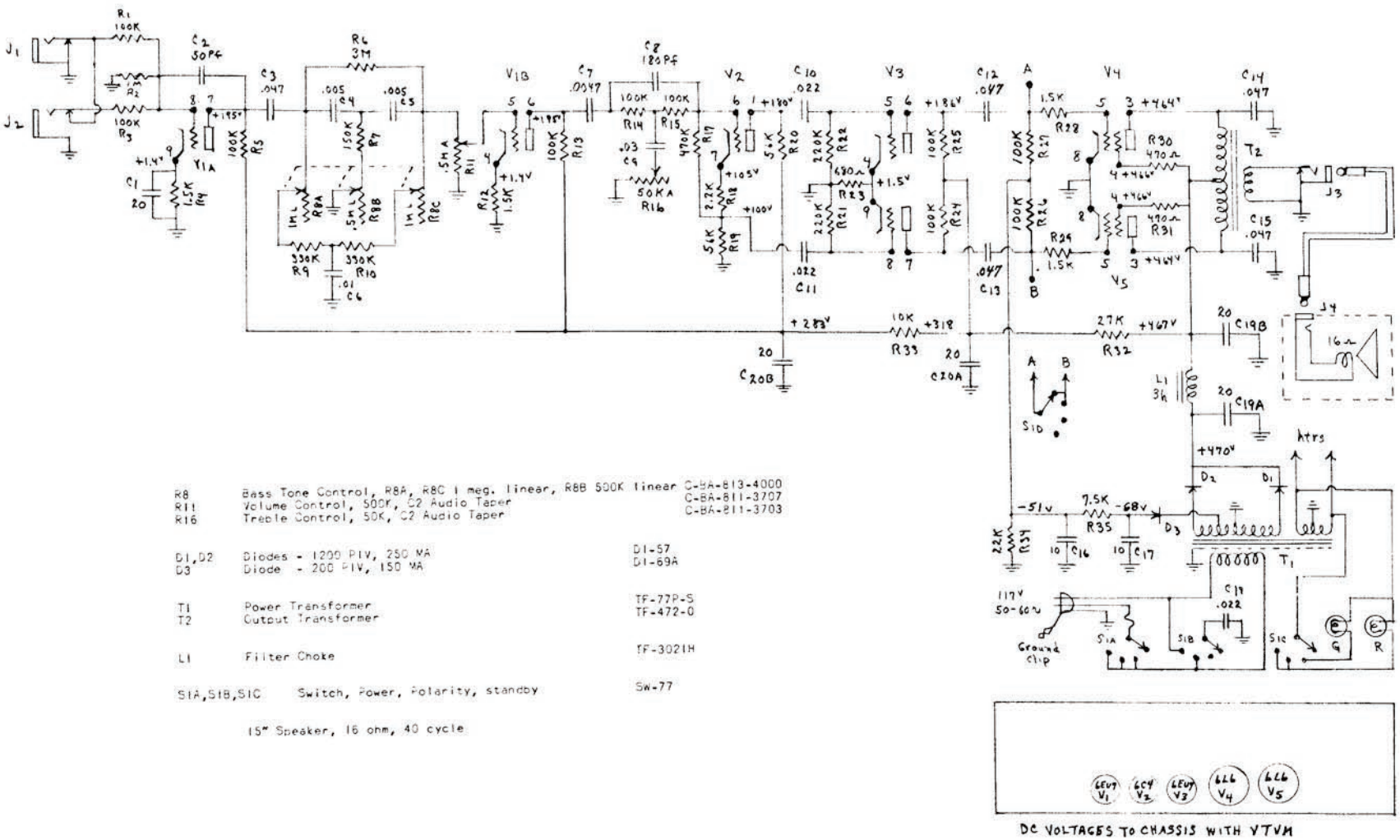

DC VOLTAGES TO CHASSIS WITH VTVM

R8 R11 R16	Bass Tone Control, R8A, R8C 1 meg. linear, R8B 500K linear Volume Control, 500K, C2 Audio Taper Treble Control, 50K, C2 Audio Taper	C-BA-813-4000 C-BA-811-3707 C-BA-811-3703
D1,D2 D3	Diodes - 1200 PIV, 250 MA Diode - 200 PIV, 150 MA	D1-57 D1-69A
T1 T2	Power Transformer Output Transformer	TF-77P-S TF-472-O
L1	Filter Choke	TF-3021H
S1A,S1B,S1C	Switch, Power, Polarity, standby	SW-77

15" Speaker, 16 ohm, 40 cycle

FUSE

The fuse used in this Amplifier is a type 3AG of three amperes rating.

DO NOT USE FUSES OF HIGHER RATING

SERVICE

If the amplifier is in need of servicing, it should be taken to a reliable radio man. The electrical diagram in this folder should be shown the repairman to assist him in servicing the amplifier.

EPIPHONE

EMBASSY

MODEL EA-300RVT AMPLIFIER

INSTRUCTIONS

EPIPHONE Inc., KALAMAZOO, MICHIGAN

IMPORTANT — READ CAREFULLY BEFORE USE

CAUTION

The Reverb Unit has been carefully constructed. It is, however, a delicate electronic device. Treat it with the same care and respect given a TV set.

Avoid dropping, sudden jolts, or rough handling and it will give excellent service. This beautifully musical Reverberation effect is not to be confused with the repeating signal produced by the mechanical tape recorder style of echo units.

UNPACKING

Amplifiers are carefully packed to prevent damage in shipment. However, upon receipt of the amplifier, examine carefully to determine if there has been breakage of tubes or parts. If damage has occurred during shipment, call the Transportation Company immediately, and place a claim.

TUBES

Make certain all tubes are seated firmly into their respective sockets. Each tube is labeled for proper replacement should any tube be out of its socket. Be especially carefully when inserting tubes to see that the pins on the tube are correctly aligned with the holes in the socket before pushing into place. Do not twist tube — push tube straight into socket. It is advisable to check tubes from time to time depending on amount of use and excellence of performance. *Be sure tubes are always returned to proper sockets and seated firmly.*

CAUTION

Damage to the amplifier will result if it is connected to an improper power source. This amplifier is designed to be operated on 105-125 volt, 50-60 cycle alternating current only. The voltage from the power lines should not exceed 125, and the frequency of the current should be either 50 or 60 cycles. When ready to use amplifier, insert the plug on the power cord into the electric outlet and move switch to "on." After approximately one minute for the tubes to heat, the amplifier is ready for use.

A. C. POWER-POLARITY SWITCH

A convenient switch has been provided for performing a total of three functions, turning the amplifier on and off, putting the amplifier in "Standby" and selecting the proper polarity of the power source which reduces the A.C. hum and other extraneous noises to a minimum. In the "Standby" position the amplifier is kept "warmed up" and ready to play at the instant the switch is advanced to the "On" positions. Two "On" positions have been provided. The hum and hiss level on one of the "On" positions will be noticeably lower — this is the correct "Polarity" for using the amplifier.

As an added convenience to the artist this amplifier is equipped with a "Standby pilot light" as well as the "Regular pilot light". When the "Amber" light is on, the amplifier is in "Standby"; when the "Red" light is on the amplifier is "On" and ready to play.

FUSE

The fuse used in this Amplifier is a type 3AG of 3 ampere Slo-Blo rating. DO NOT USE A FUSE OF HIGHER RATING.

SERVICE

If the amplifier is in need of servicing, it should be taken to a reliable radio man. The electrical diagram in this folder should be shown the repairman to assist him in servicing the amplifier.

REVERBERATION — EFFECTIVE IN CHANNEL 2 ONLY

The Reverberation Unit must always be placed on a solid non-vibrating surface or footing when in operation.

Any sudden shock, jolt, or wiggle, when in use, will cause undesirable noise. The resultant clatter of an inadvertant shake or bump is annoying but not necessarily harmful. This delicate sensitivity to shock and vibration is a normal characteristic of the device.

No problem will be encountered while the unit is connected if supporting surface is solid and unit is not moved about. To avoid the unwanted noise, turn the reverberation unit off by pressing the foot switch.

TREMOLO — EFFECTIVE IN CHANNEL 2 ONLY

The Tremolo effect adds another dimension to the Reverberation effect. It can be used either with or without reverberation at the players discretion. The Tremolo is turned on or off by the use of the foot switch. The Tremolo Frequency Range has been carefully set to cover a wide range of Tremolo effects. The Depth of the Tremolo is also variable being controlled by the Depth control.

OPERATION OF MICROPHONE

The high gain and high fidelity characteristics of this Amplifier, permit the use of most of the popular high impedance microphones for public address work. The microphone should be plugged into the Number One Jack of Channel 1.

SPECTRUM CONTROLS

The wide range of tonal extremes required by different artists can all be accommodated with Epiphone Spectrum Control. For maximum loudness with a given power, the "treble" control should be Maximum, the "mid range" minimum, and the bass near 5. With this adjustment the tone controls on the guitar will have their maximum effectiveness.

"Jazz" sound to the artist taste can be had by reducing the "treble", adding some "mid range", and adjusting the "bass" to the artist requirement. Set treble control channel II to jazz position for maximum jazz effect

Spectrum Controls plus the tone controls on the artist's instrument offer an endless variety of tonal color.

PRESENCE SWITCH

Presence switch in upper position will add a Chime or Bell like tone to the upper harmonics. In the lower position, the treble tones will have a mello characteristic.

EA-300 RVT

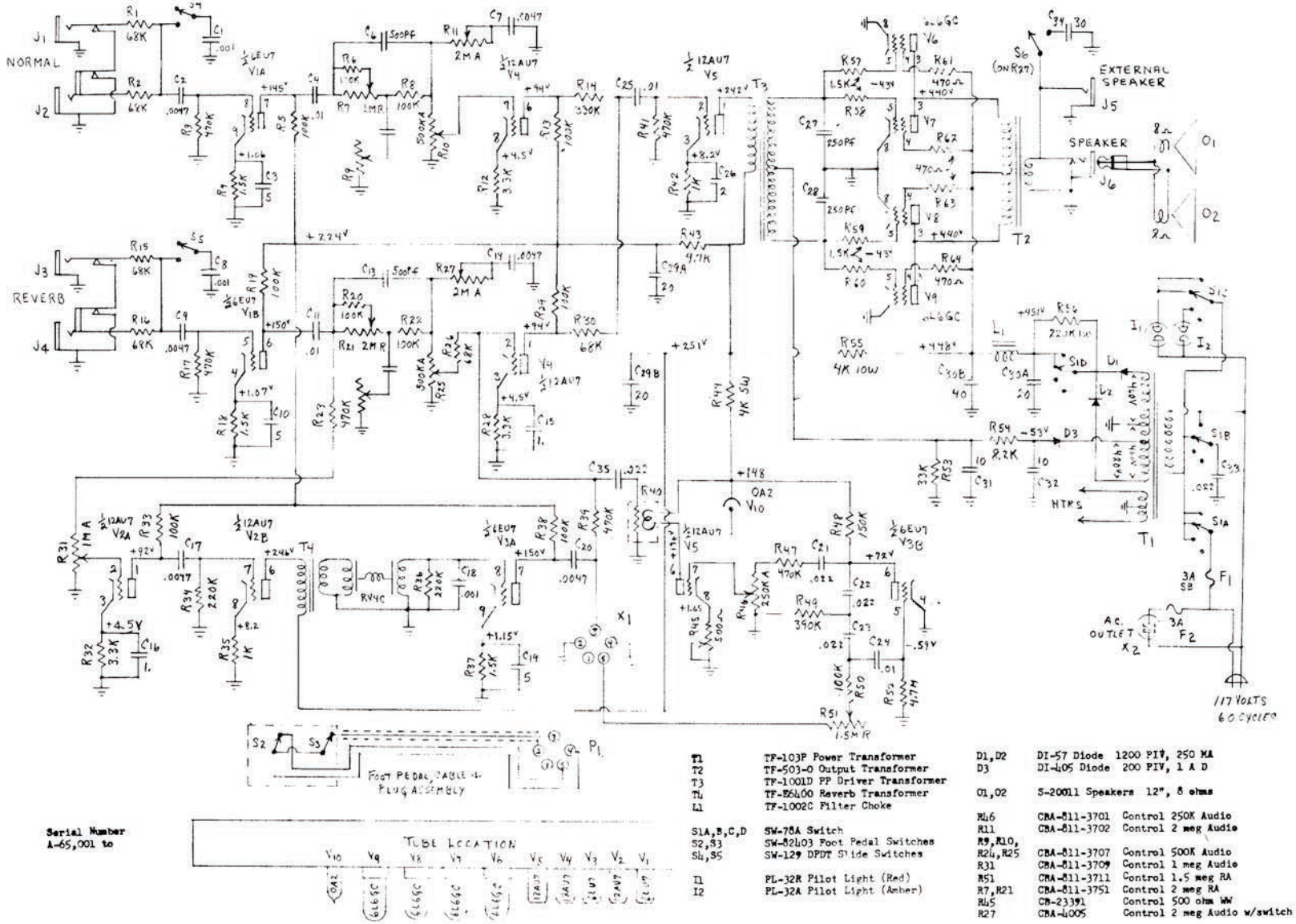

T1	TF-103P Power Transformer	D1,D2	DI-57 Diode 1200 PIV, 250 MA
T2	TF-503-O Output Transformer	D3	DI-405 Diode 200 PIV, 1 A D
T3	TF-1001D PP Driver Transformer		
T4	TF-B6400 Reverb Transformer	O1,O2	S-20011 Speakers 12", 8 ohms
L1	TF-1002C Filter Choke		
		R46	CBA-811-3701 Control 250K Audio
S1A,B,C,D	SW-78A Switch	R11	CBA-811-3702 Control 2 meg Audio
S2,S3	SW-82403 Foot Pedal Switches	R9,R10,	
S4,S5	SW-129 DPDT Slide Switches	R24,R25	CBA-811-3707 Control 500K Audio
		R31	CBA-811-3709 Control 1 meg Audio
I1	PL-32R Pilot Light (Red)	R51	CBA-811-3711 Control 1.5 meg RA
I2	PL-32A Pilot Light (Amber)	R7,R21	CBA-811-3751 Control 2 meg RA
		R45	CB-23391 Control 500 ohm WW
		R27	CBA-4005 Control 2 meg Audio w/switch

Serial Number
A-65,001 to

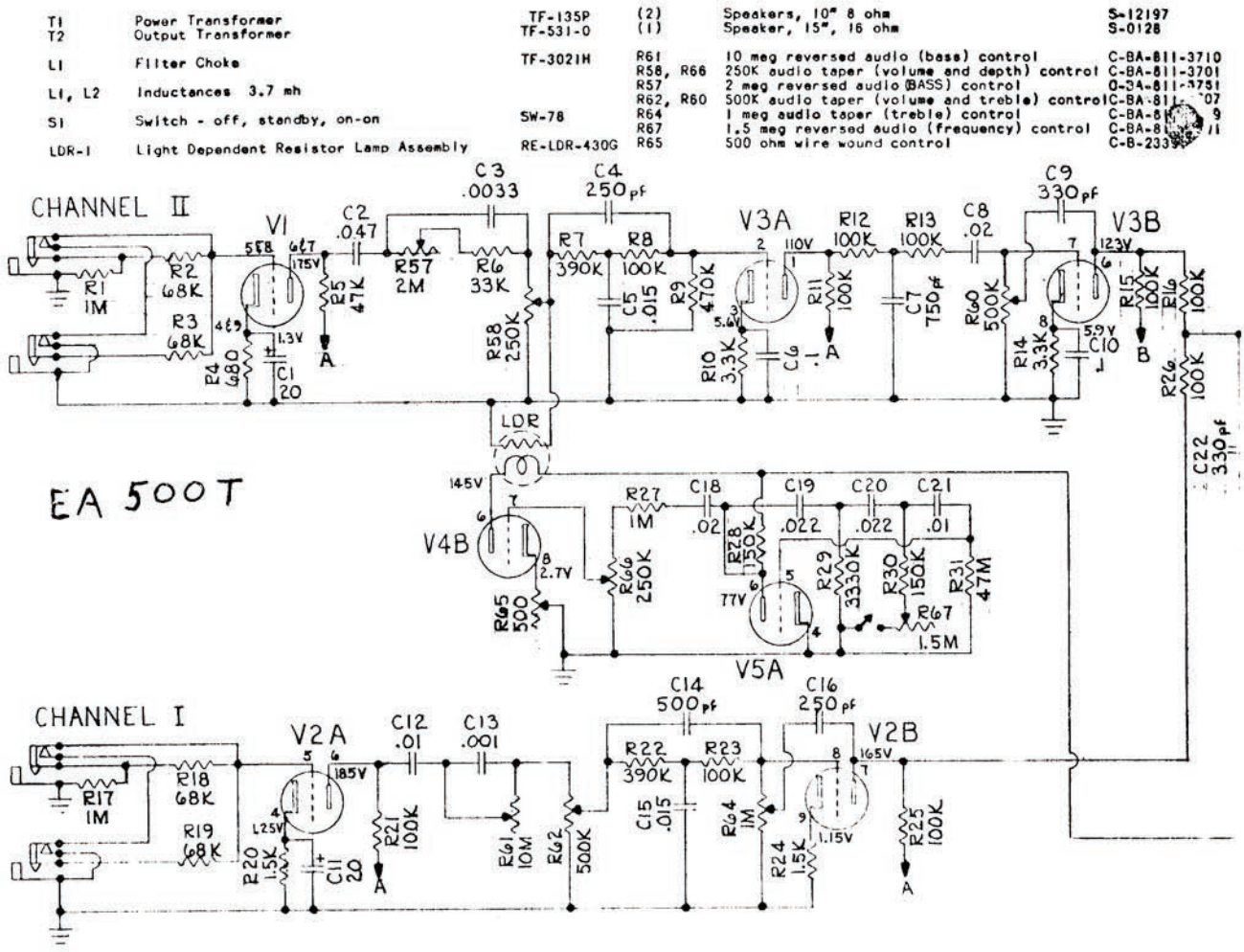

UNPACKING

Amplifiers are carefully packed to prevent damage in shipment. However, upon receipt of the amplifier, examine carefully to determine if there has been breakage of tubes or parts. If damage has occurred during shipment, call the Transportation Company immediately, and place a claim.

CAUTION

Damage to the amplifier will result if it is connected to an improper power source. This amplifier is designed to be operated on 105-125 volt, 50-60 cycle alternating current only. The voltage from the power lines should not exceed 125, and the frequency of the current should be either 50 or 60 cycles. When ready to use amplifier, insert the plug on the power cord into the electric outlet and move switch to "on." After approximately one minute for the tubes to heat, the amplifier is ready for use.

SET UP INSTRUCTIONS

A set of 4 heavy duty casters are furnished with this amplifier for ease of moving it from one place to another. They are detached from the amplifier at time of shipment and are taped to the amplifier cabinet in a brown vinyl bag. They can be easily attached or detached as needed. When playing this amplifier at relatively high power output it is suggested the casters be removed to eliminate the possibility of synthetic vibrations or rattles.

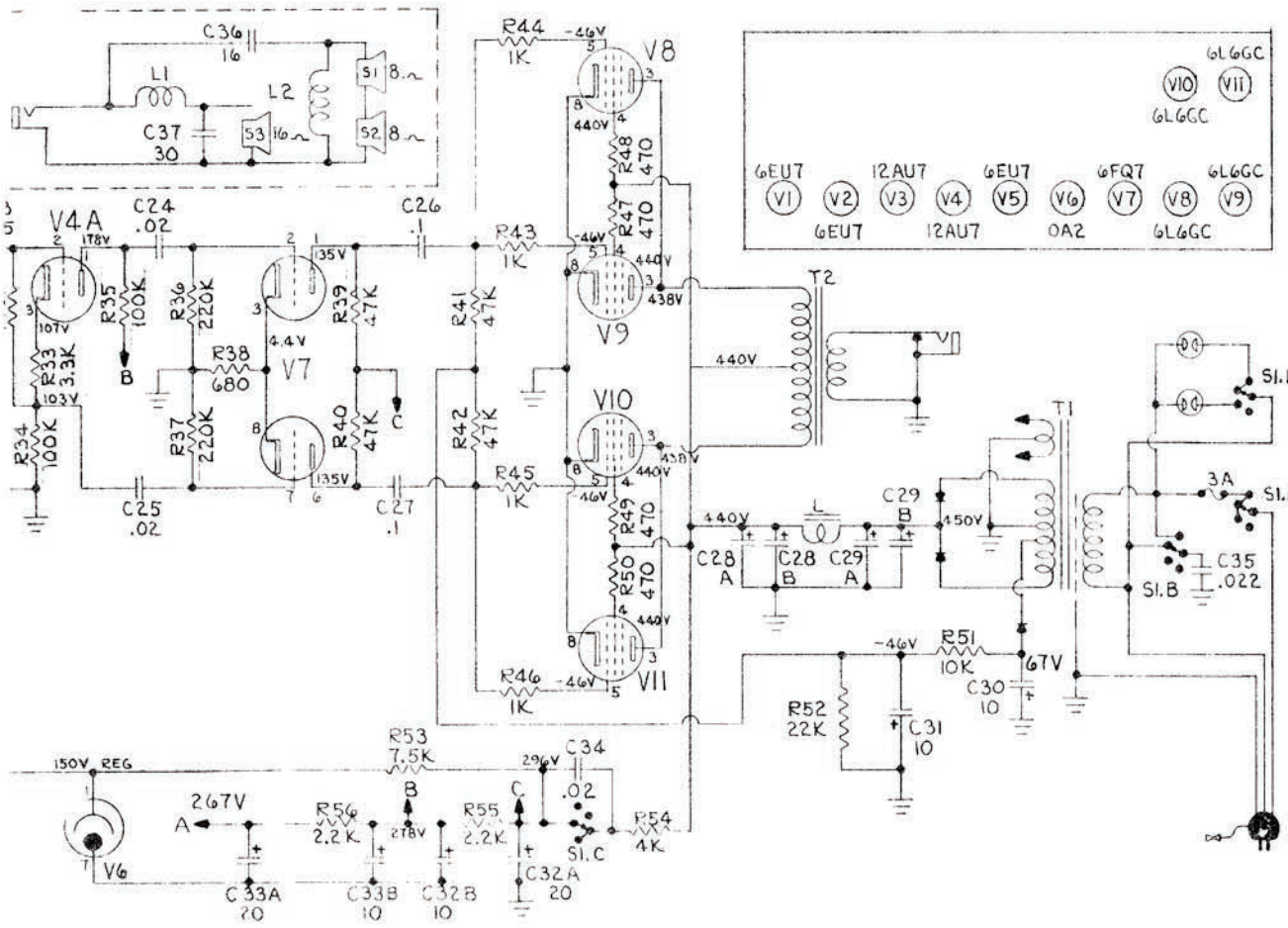

The Piggy Back amplifier may be played on or off the speaker cabinet. When playing it on the speaker cabinet be sure it is fastened securely by the locking fixtures provided.

SPEAKER CORD CONNECTION

The speaker cord is packed with the A. C. supply cord. One end must be plugged into the speaker jack located on the speaker cabinet back panel and the other end should be plugged into the speaker jack located on the back of the amplifier chassis.

A.C. POWER-POLARITY SWITCH

A convenient switch has been provided for performing a total of three functions, turning the amplifier on and off, putting the amplifier in "Standby" and selecting the proper polarity of the power source which reduces the A.C. hum and other extraneous noises to a minimum. In the "Standby" position the amplifier is kept "warmed up" and ready to play at the instant the switch is advanced to the "On" positions. Two "On" positions have been provided. The hum and hiss level on one of the "On" positions will be noticeably lower — this is the correct "Polarity" for using the amplifier.

In locations of extremely high noise levels, clipping the "Ground Clip" to a grounded object will greatly reduce objectionable noise and hum.

As an added convenience to the artist this amplifier is equipped with a "Standby pilot light" as well as the "Regular pilot light". When the "Amber" light is on, the amplifier is in "Standby"; when the "Red" light is on the amplifier is "On" and ready to play.

Maestro

REVERB. TREMOLO
MODEL M-1 RVT

INSTRUCTIONS

PRODUCT OF

Gibson Electronics

KALAMAZOO, MICHIGAN

REVERB UNIT UNPACKING INSTRUCTIONS

IMPORTANT — READ CAREFULLY BEFORE USE

CAUTION

The Reverb Unit has been carefully constructed. It is, however, a delicate electronic device. Treat it with the same care and respect given a TV set.

Avoid dropping, sudden jolts, or rough handling and it will give excellent service. This beautifully musical Reverberation effect is not to be confused with the repeating signal produced by the mechanical tape recorder style of echo units.

UNPACKING

Amplifiers are carefully packed to prevent damage in shipment. However, upon receipt of the amplifier, examine carefully to determine if there has been breakage of tubes or parts. If damage has occurred during shipment, call the Transportation Company immediately, and place a claim.

TUBES

Make certain all tubes are seated firmly into their respective sockets. Each tube is labeled for proper replacement should any tube be out of its socket. Be especially careful when inserting tubes to see that the pins on the tube are correctly aligned with the holes in the socket before pushing into place. Do not twist tube — push tube straight into socket. It is advisable to check tubes from time to time depending on amount of use and excellence of performance. *Be sure tubes are always returned to proper sockets and seated firmly.*

REVERB POWER UNIT SET UP INSTRUCTIONS

CAUTION

Check the current rating of the power outlet to be used. *Be positive it is 110-120 volt, 50-60 cycle A. C. (alternating current) ONLY.* Never connect the Reverb Unit to a D. C. (direct current) outlet. Improper current type or rating can do serious damage.

SET UP

Set up the guitar and amplifier in the usual manner — see diagram below.

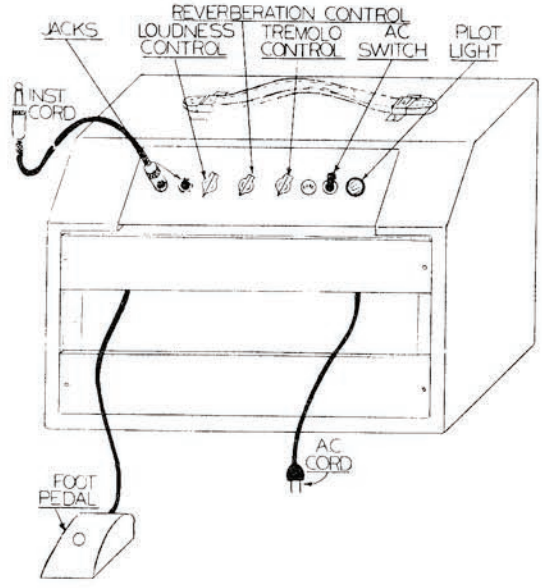

1. If only one instrument is used it should be plugged into the Number 1 Jack for maximum gain.
2. Place the foot control switch of the Reverberation Unit in a convenient position and the system is ready to operate. This foot switch turns the reverberation effect ON and OFF.
3. If tremolo is to be used with the music being played, it can be accomplished by turning Tremolo control clockwise from the OFF position. The frequency of the tremolo can be varied over a wide range of speeds by turning this control.
4. REVERBERATION:—Due to the unusual flexibility of the Reverberation circuit, it is important that the operator understands the various control settings to obtain the total range of Reverberation effects of which this amplifier is capable. Illustrated herein are several examples of control settings which will reproduce different Reverberation effects.

Loudness Reverberation Tremolo

Example No. 1. 50% Main Signal - 50% Reverb.

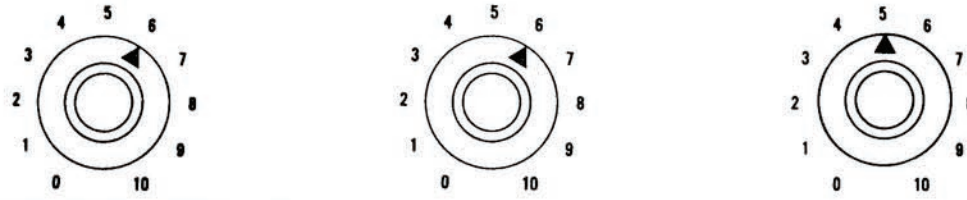

INSTRUMENT SETTINGS — Tone control and/or toggle switch in maximum treble position. Volume control setting 2½ to 3.

Example No. 2. 75% Main Signal - 25% Reverb.

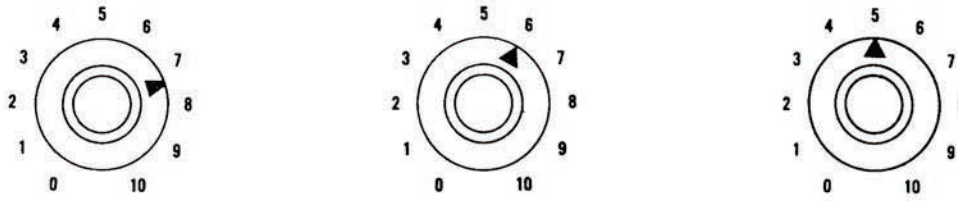

INSTRUMENT SETTINGS — Same as above

Example No. 3. 25% Main Signal - 75% Reverb.

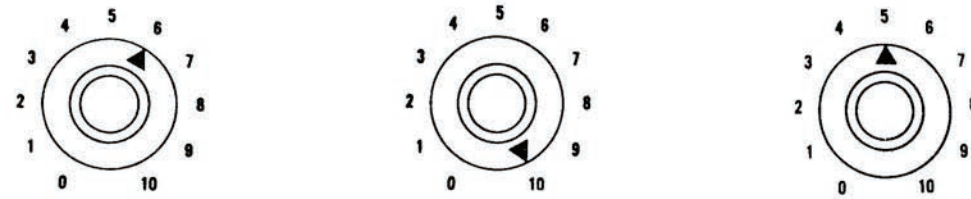

INSTRUMENT SETTINGS — Same as Example No. 2.

Example No. 4. 100% Reverb.

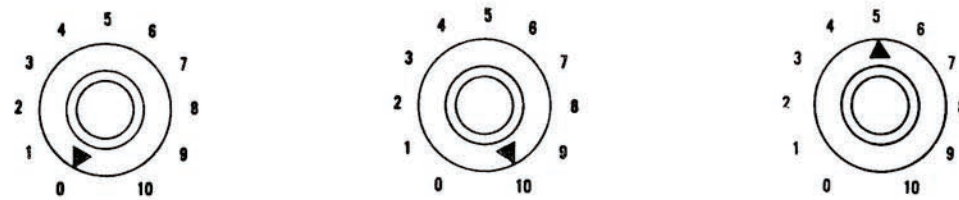

INSTRUMENT SETTINGS — Same as Example No. 2.

FOOT SWITCH MUST BE IN THE "ON" POSITION FOR REVERBERATION.

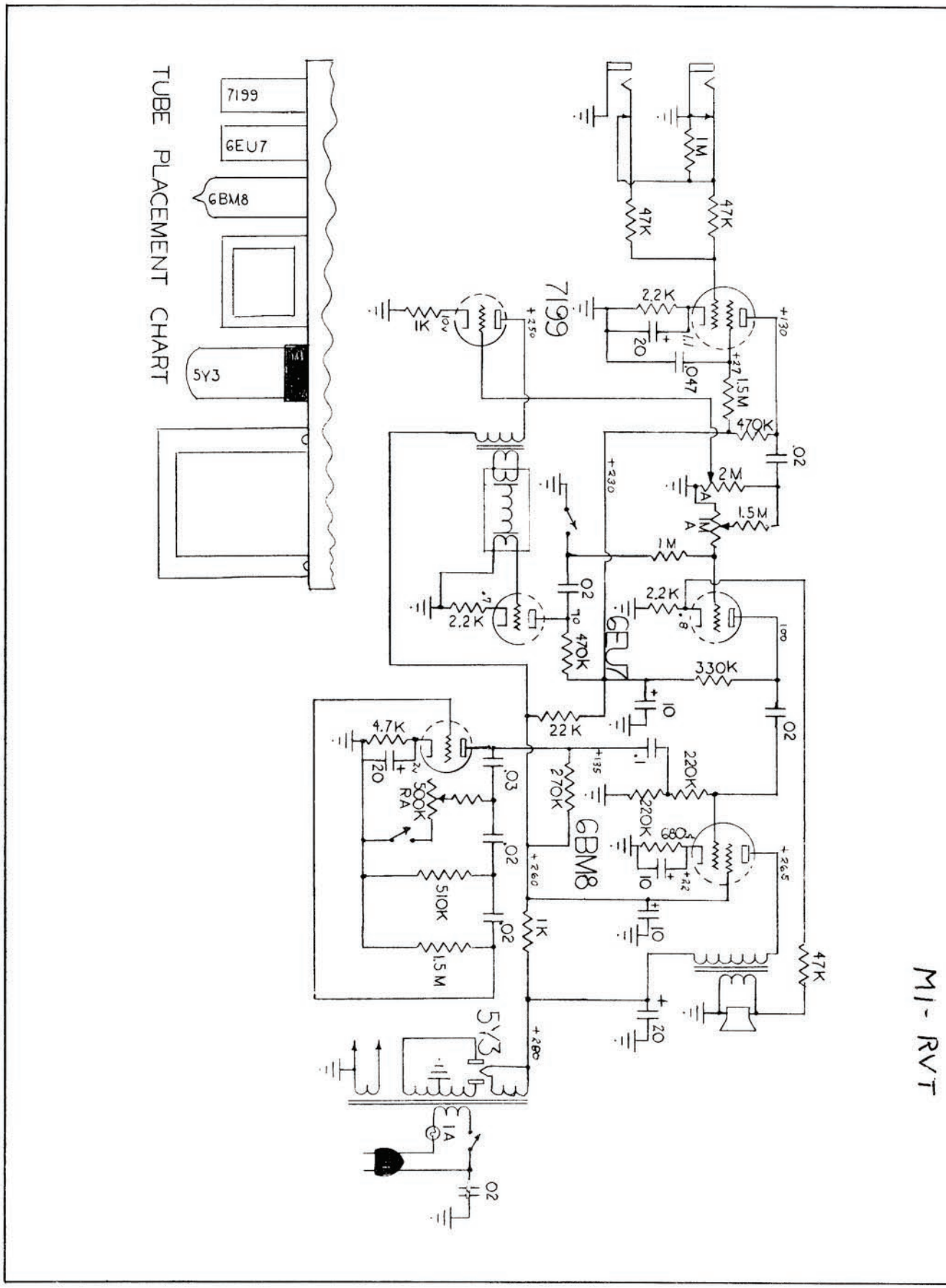
TUBE PLACEMENT CHART
7199
6EU7
6BM8
5Y3
MI-RVT
7199
6EU7
6BM8
5Y3
1M
47K
47K
2.2K
20
.047
1.5M
470K
.02
2M
1.5M
1M
1K
2.2K
2.2K
470K
330K
10
22K
4.7K
20
500K RA
.03
.02
510K
.02
1.5M
270K
220K
220K
680
10
1K
10
47K
20
1A
.02

Maestro

MODEL M-201 AMPLIFIER

INSTRUCTIONS

PRODUCT OF

Gibson Electronics

KALAMAZOO, MICHIGAN

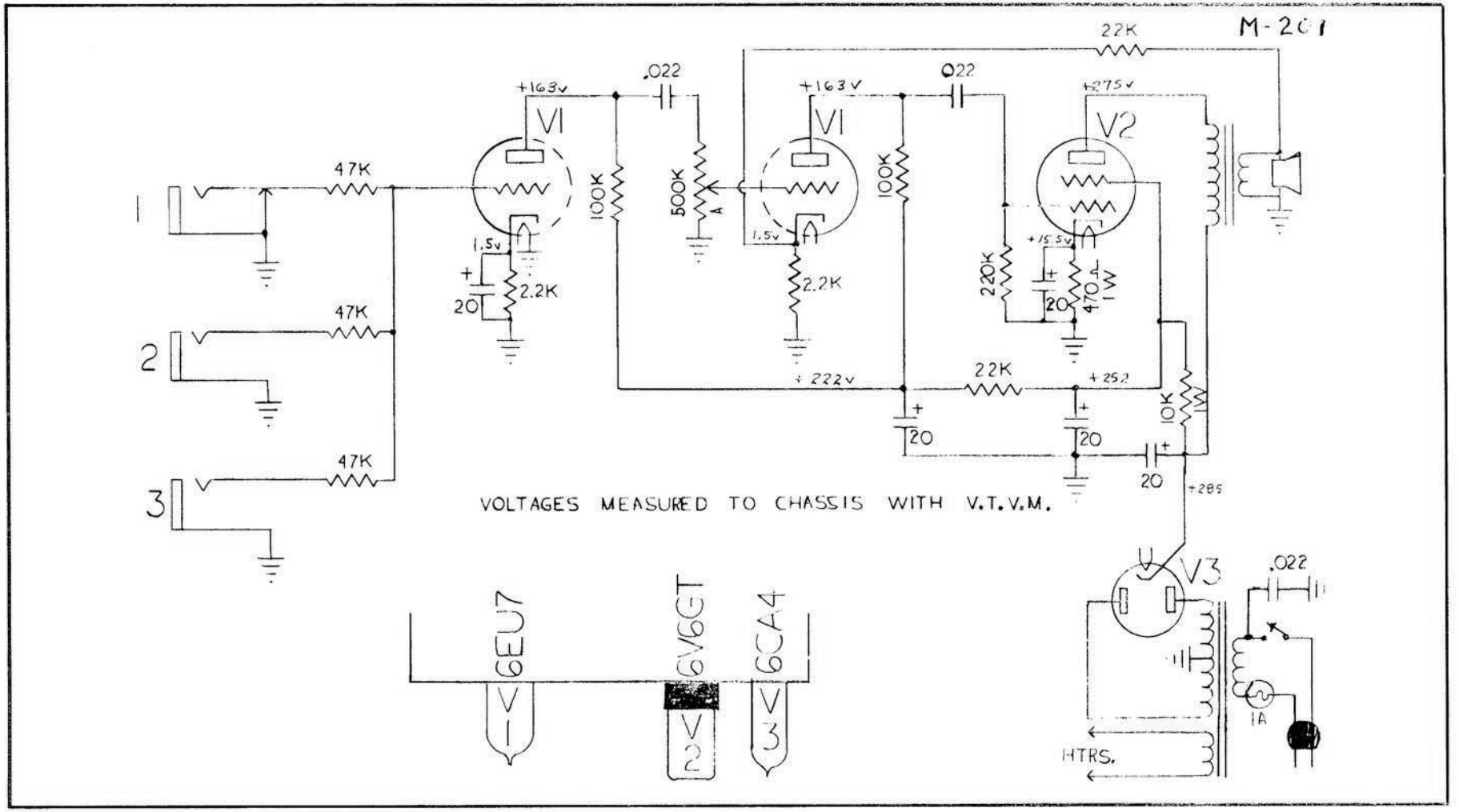

INSTRUCTIONS

When only one instrument is used, plug into No. 1 input jack.

This amplifier is designed for 105-125 volt, 50-60 cycle current. Damage will result if connected to improper power source.

Use the above schematic to facilitate service by a reliable radio man.

Do not use higher rating fuse than one ampere, Slo-Blo, type 3 A.G.

This amplifier was carefully checked and in good playing condition when shipped. If damaged when received call transportation company immediately and place claim.

Maestro

MODEL M-216 RVT

INSTRUCTIONS

PRODUCT OF

Gibson Electronics

KALAMAZOO, MICHIGAN

REVERB UNIT UNPACKING INSTRUCTIONS

IMPORTANT — READ CAREFULLY BEFORE USE

CAUTION

The Reverb Unit has been carefully constructed. It is, however, a delicate electronic device. Treat it with the same care and respect given a TV set.

Avoid dropping, sudden jolts, or rough handling and it will give excellent service. This beautifully musical Reverberation effect is not to be confused with the repeating signal produced by the mechanical tape recorder style of echo units.

UNPACKING

Amplifiers are carefully packed to prevent damage in shipment. However, upon receipt of the amplifier, examine carefully to determine if there has been breakage of tubes or parts. If damage has occurred during shipment, call the Transportation Company immediately, and place a claim.

TUBES

Make certain all tubes are seated firmly into their respective sockets. Each tube is labeled for proper replacement should any tube be out of its socket. Be especially careful when inserting tubes to see that the pins on the tube are correctly aligned with the holes in the socket before pushing into place. Do not twist tube — push tube straight into socket. It is advisable to check tubes from time to time depending on amount of use and excellence of performance. *Be sure tubes are always returned to proper sockets and seated firmly.*

REVERB POWER UNIT SET UP INSTRUCTIONS

CAUTION

Damage to the amplifier will result if it is connected to an improper power source. This amplifier is designed to be operated on 105-125 volt, 50-60 cycle alternating current only. The voltage from the power lines should not exceed 125, and the frequency of the current should be either 50 or 60 cycles. When ready to use power, insert the plug on the power cord into the electric outlet and move switch to "on." After approximately one minute for the tubes to heat, the amplifier is ready for use.

The Reverberation Unit must always be placed on a solid non-vibrating surface or footing when in operation.

Any sudden shock, jolt, or wiggle, when in use, will cause undesirable noise. The resultant clatter of an inadvertant shake or bump is annoying but not necessarily harmful. This delicate sensitivity to shock and vibration is a normal characteristic of the device.

No problem will be encountered while the unit is connected if supporting surface is solid and unit is not moved about. To avoid the unwanted noise, turn the reverberation unit off by pressing the foot switch.

FUSE

The fuse used in this Amplifier is a type 3AG of one ampere rating. DO NOT USE FUSES OF HIGHER RATING

TREMOLO

The Tremolo effect adds another dimension to the Reverberation effect. It can be used either with or without reverberation at the players discretion. The Tremolo is turned on or off by the use of the foot switch. The Tremolo Frequency Range has been carefully set to cover a wide range of Tremolo effects. The Depth of the Tremolo is also variable being controlled by the Depth control.

REVERBERATION —

Due to the unusual flexibility of the Reverberation circuit, it is important that the Operator understands the various control settings to obtain the total range of Reverberation effects of which this Amplifier is capable. Illustrated below are several examples of control settings which will reproduce different Reverberation effects.

Volume Tone Reverberation Depth Frequency

Example No. 1. 50% Main Signal - 50% Reverb.

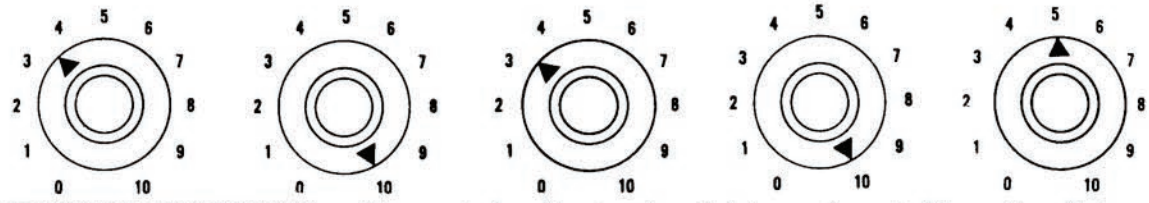

INSTRUMENT SETTINGS — Tone control and/or toggle switch in maximum treble position. Volume control setting 2½ to 3.

Example No. 2. 75% Main Signal - 25% Reverb.

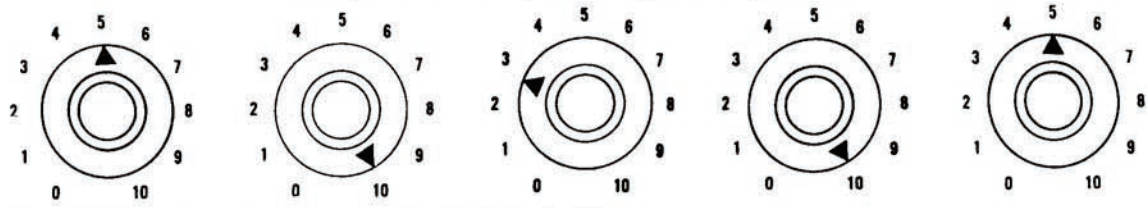

INSTRUMENT SETTINGS — Same as Example No. 1.

Example No. 3. 25% Main Signal - 75% Reverb.

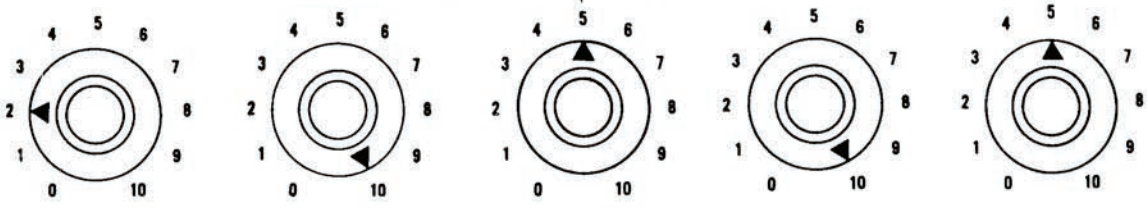

INSTRUMENT SETTINGS — Same as Example No. 1.

Example No. 4. 100% Reverb.

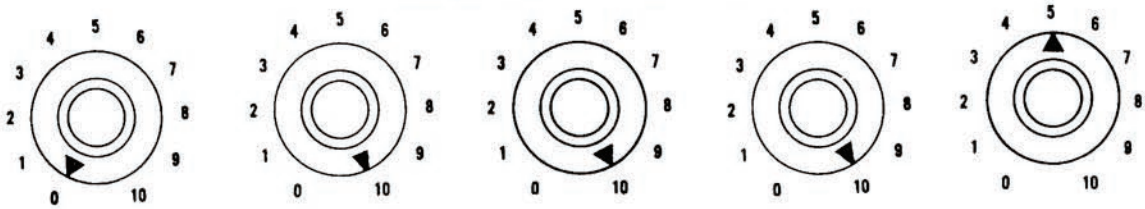

INSTRUMENT SETTINGS — Same as Example No. 1.

FOOT SWITCH MUST BE IN THE "ON" POSITION FOR REVERBERATION.

CONTROL LOCATIONS

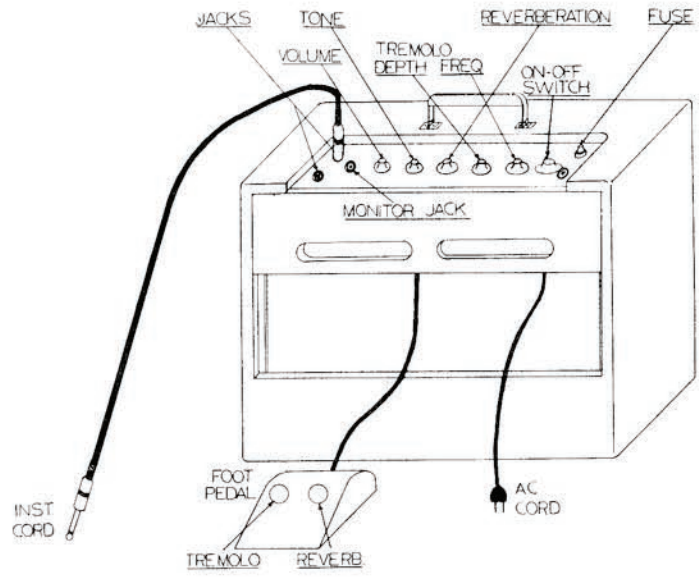

OPERATIONAL INSTRUCTIONS FOR USE OF THIS REVERBERATION AMPLIFIER IN CONJUNCTION WITH A REGULAR AMPLIFIER

The use of this Reverberation Amplifier with a Regular Amplifier will add a spacious liveliness to instrument reproduction that is far beyond the possibilities of single amplifier Reverberation. Listed below are the simple instructions for this type of operation.

1. Plug the A.C. cord of this Reverberation Amplifier into a convenient outlet.
2. For normal signal amplification in Regular Amplifier insert one plug of a Shielded Jumper Cord into Jack No. 2 of the Reverberation Amplifier. Plug other end of this jumper into the input jack normally used in the Regular Amplifier. For Reverberation, and/or, normal signal, with or without Tremolo, amplification in the Regular Amplifier move the plug from Jack No. 2 to the Monitor Jack on the Reverberation Amplifier. Set Regular Amplifier Volume control for normal volume.
3. The Instrument Cord should be plugged into the No. 1 jack of the Reverberation Amplifier. Plug the A.C. line cord of the Regular Amplifier into a convenient outlet.
4. Turn ON the A.C. switches for both amplifiers, the Volume and Tone controls may be set as illustrated on page 2.

Illustrated below is a pictorial diagram showing the correct hook-up.

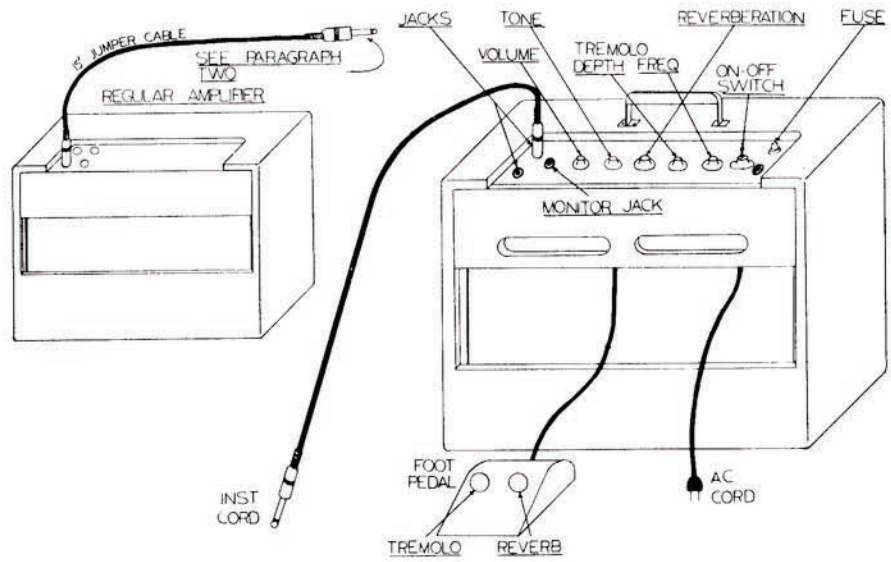

5. Place the combination Reverb. Tremolo Foot Switch in a convenient position and the system is ready to operate. Either, or both, Reverberation and Tremolo effect is available by switching the indicated switch ON or OFF.
6. The percentage of Reverberation can be controlled by the Reverberation control, Loudness control and the Volume control of the Regular Amplifier.
7. The instrument is ready to be played. If Reverb. signal is not coming through, step on the Foot Switch as it may be in the OFF position. Thereafter the Reverberation effect can be conveniently cut in or out with a snap of the Foot Switch.
8. When the Reverberation Foot Switch is OFF, the Reverberation Amplifier is operated as a Regular Amplifier sound without Reverberation. If a cord length space separates the Regular and the Reverberation Amplifiers, an excellent impression of the "STEREO" and ECHO effect is obtained. When the Reverberation Foot Switch is ON, the Reverb. signal is super-imposed on the above "STEREO" sound with a minimum contrast of volume change.

OPERATION OF MICROPHONE

The high gain and high fidelity characteristics of this Amplifier permit the use of most of the popular high impedance microphones for public address work. The microphone should be plugged into the Number One jack and it is not recommended that other instruments be used in conjunction with the microphone.

When using a microphone it is important that the Number 280 or similar shielded plug be attached to the cord. The ordinary phone plug with bakelite or other non-shielded cover is not suitable because the leads from the microphone must be completely shielded. Otherwise, objectionable hum will result. Figure A illustrates the proper way to connect the plug to the microphone cable.
To use the microphone, insert the plug in the Number One jack and advance the Loudness control until a feedback squeal or howl is produced on the loudspeaker. Reduce the Loudness control to just below the feedback point. This setting will vary considerably, depending upon the size of the room, its acoustical properties and the distance between the microphone and loudspeaker. Feedback is the limiting factor in all public address installations and is caused when the level of sound from the loudspeakers is sufficient to actuate the microphone. The general rule when setting up the equipment is to place the loudspeaker as far from the microphone as possible.



Figure A

SERVICE

If the amplifier is in need of servicing, it should be taken to a reliable radio man. The electrical diagram in this folder should be shown the repairman to assist him in servicing the amplifier.

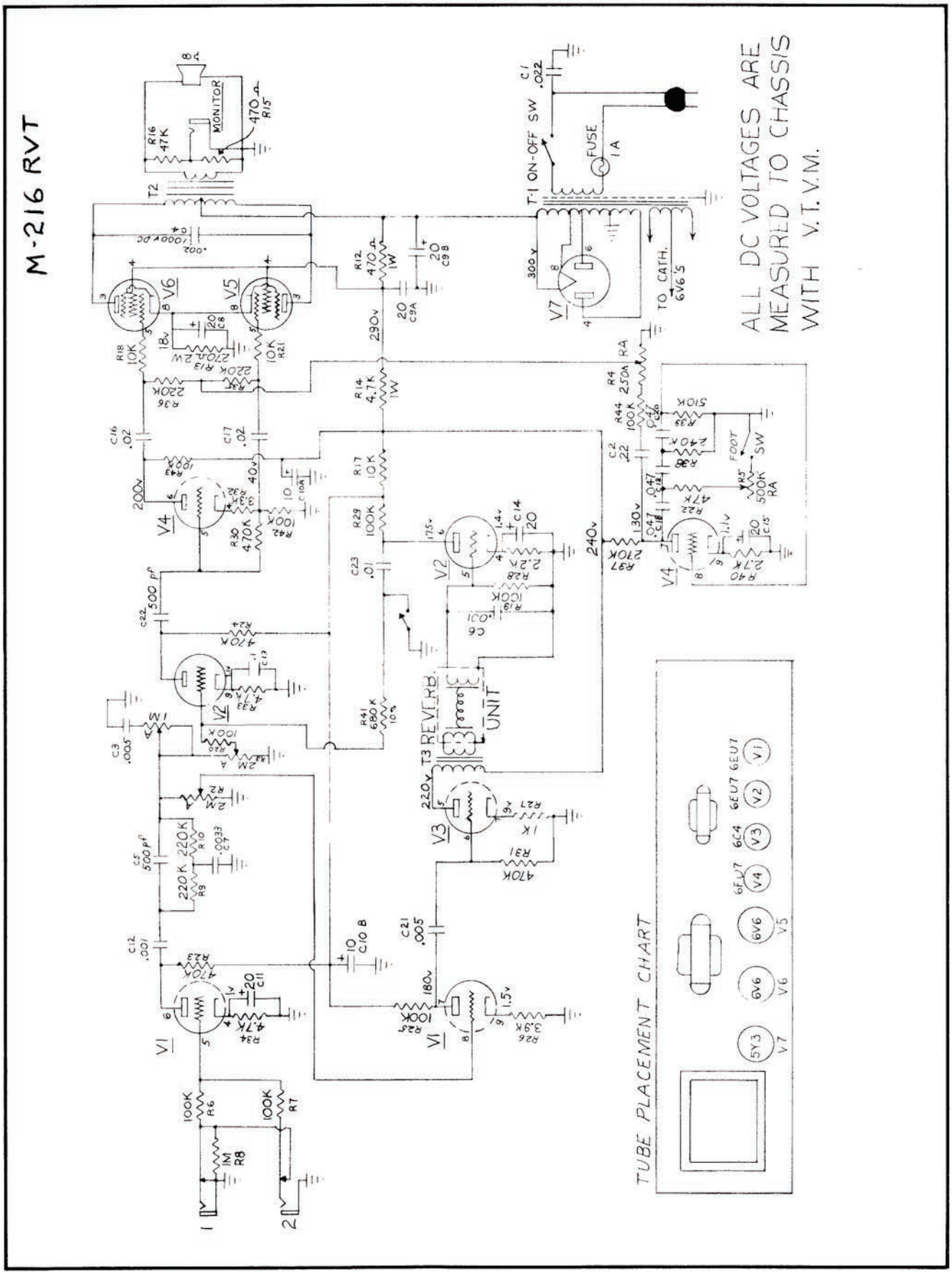
M-216 RVT
ALL DC VOLTAGES ARE MEASURED TO CHASSIS WITH V.T.V.M.
TUBE PLACEMENT CHART
REVERB. UNIT
T-1 ON-OFF SW
FUSE 1A
TO CATH. 6V6'S
MONITOR
FOOT SW

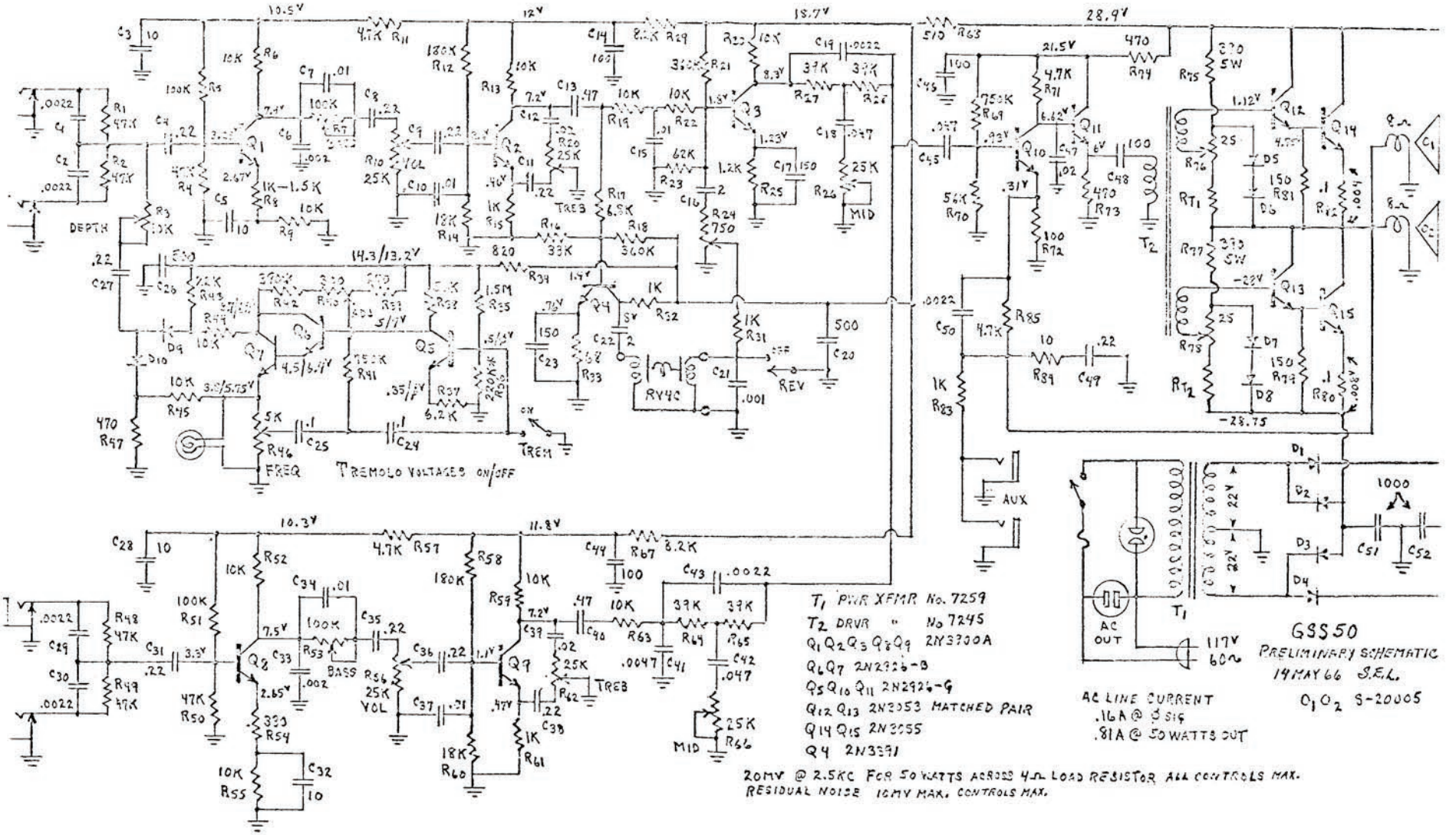
DEPTH
TREMOLO VOLTAGES ON/OFF
FREQ
TREM
REV
AUX
BASS
TREB
VOL
MID
AC OUT
117V 60~
T1 PWR XFMR No. 7259
T2 DRVR " No 7245
Q1 Q2 Q3 Q8 Q9 2N3700A
Q6 Q7 2N2926-B
Q5 Q10 Q11 2N2926-G
Q12 Q13 2N3053 MATCHED PAIR
Q14 Q15 2N3055
Q4 2N3391
20MV @ 2.5KC FOR 50 WATTS ACROSS 4Ω LOAD RESISTOR ALL CONTROLS MAX.
RESIDUAL NOISE 10MV MAX. CONTROLS MAX.
GSS50
PRELIMINARY SCHEMATIC
19 MAY 66 S.E.L.
O1 O2 S-20005
AC LINE CURRENT
.16A @ 0 SIG
.81A @ 50 WATTS OUT

STARFIRE TR-1000T

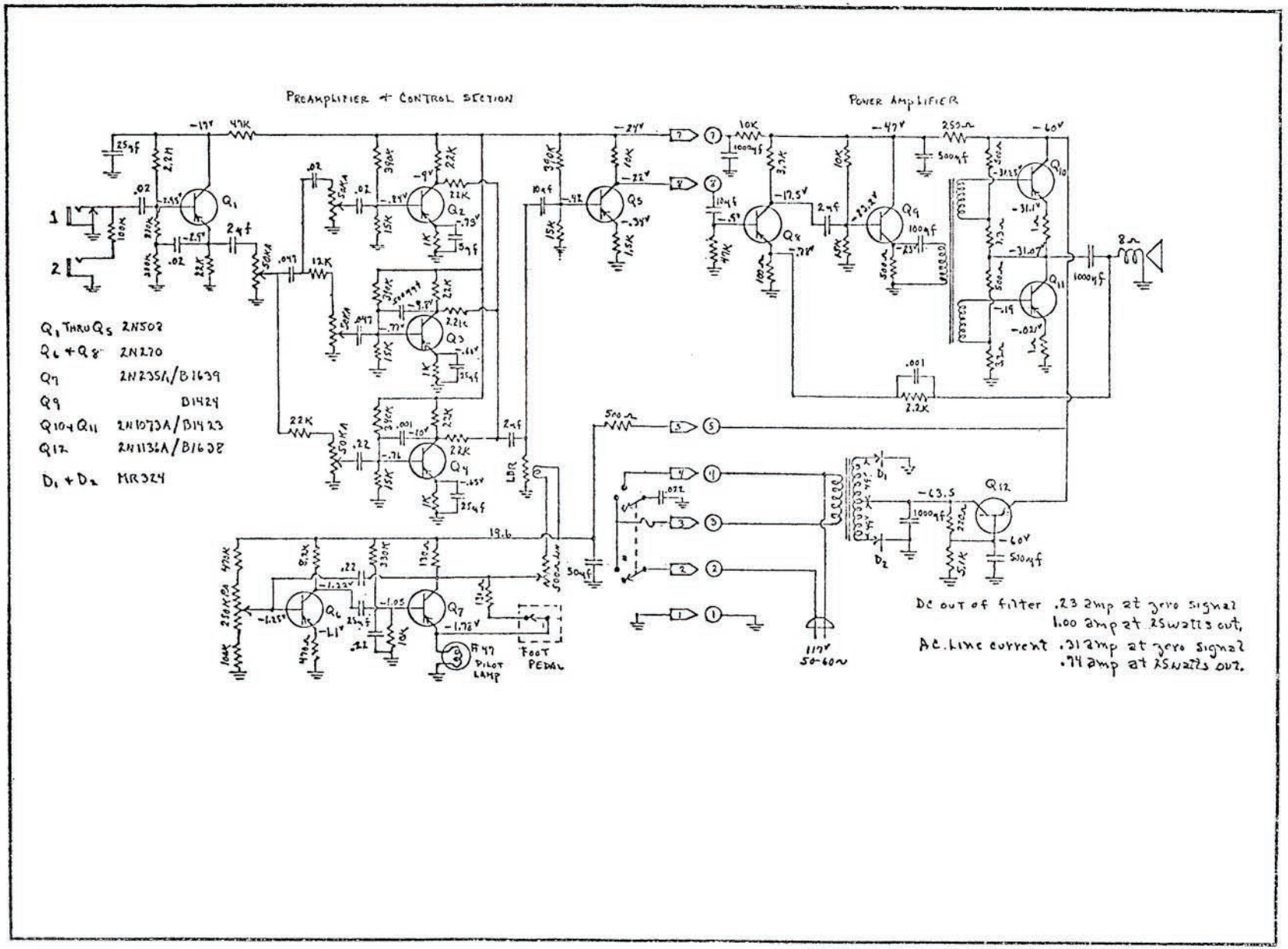

TR-1000 RVT STARFIRE REVERB TREMELO

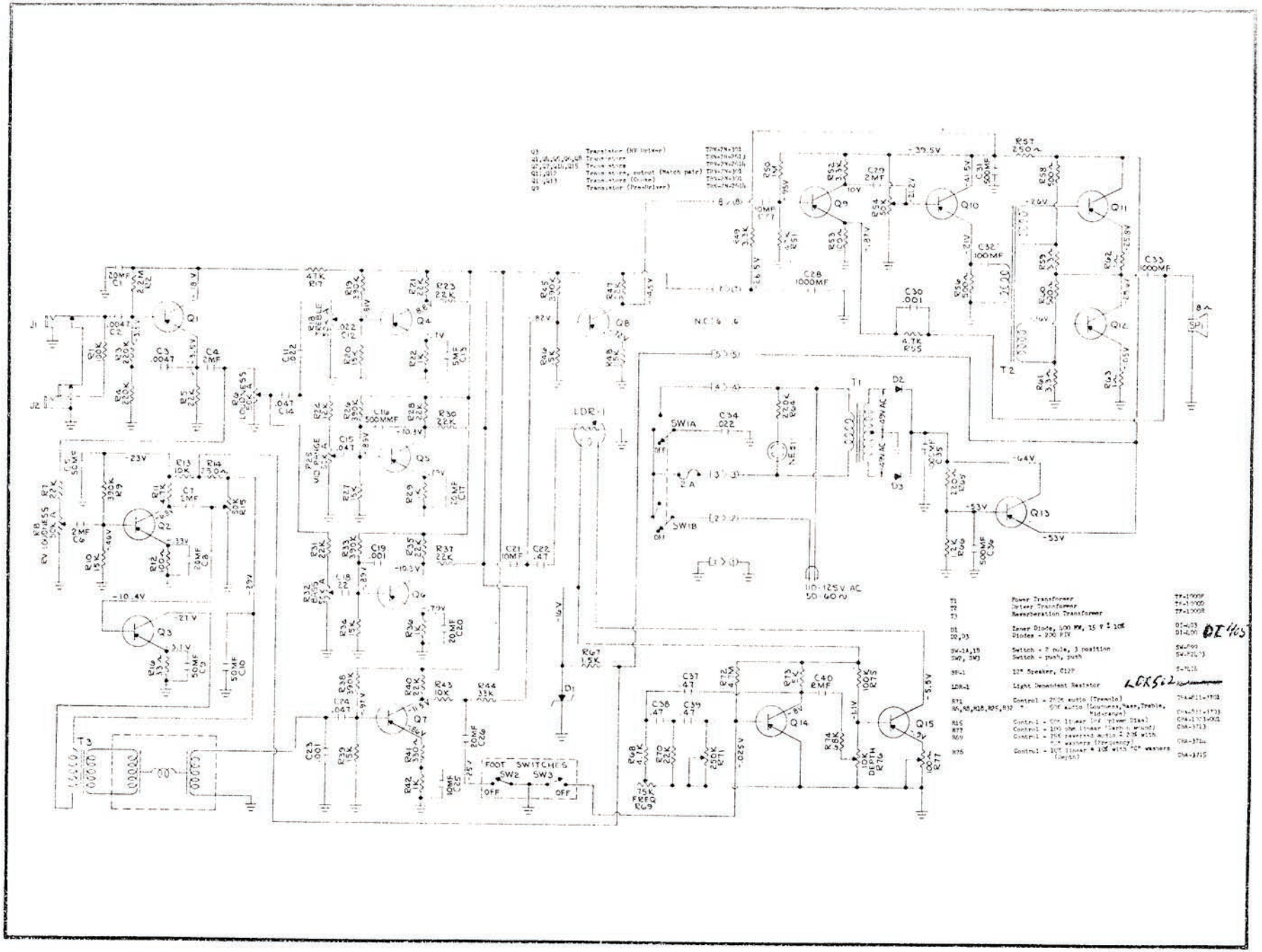

NOTES
1. ▽ IS CHASSIS GROUND.
2. D DHD 800 SILICONE DIODE.
3. N F-1 RECTIFIER.
4. T BERRY 7245.
5. F 3 AMPERE BUSS FUSE.
6. Q8 Q9 2N2926G TRANSISTOR (BERRY 7005G)
7. Q10 Q11 MATCHED PAIR 2N3053 TRANSISTORS (BERRY 7253)
8. Q12 Q13 MATCHED PAIR 2N3055 TRANSISTORS (BERRY 7214)
9. RT1 RT2 25 OHM THERMISTORS, BETA = 1120 (BERRY 7390-25) THERMALLY CONNECTED TO Q12 & Q13.

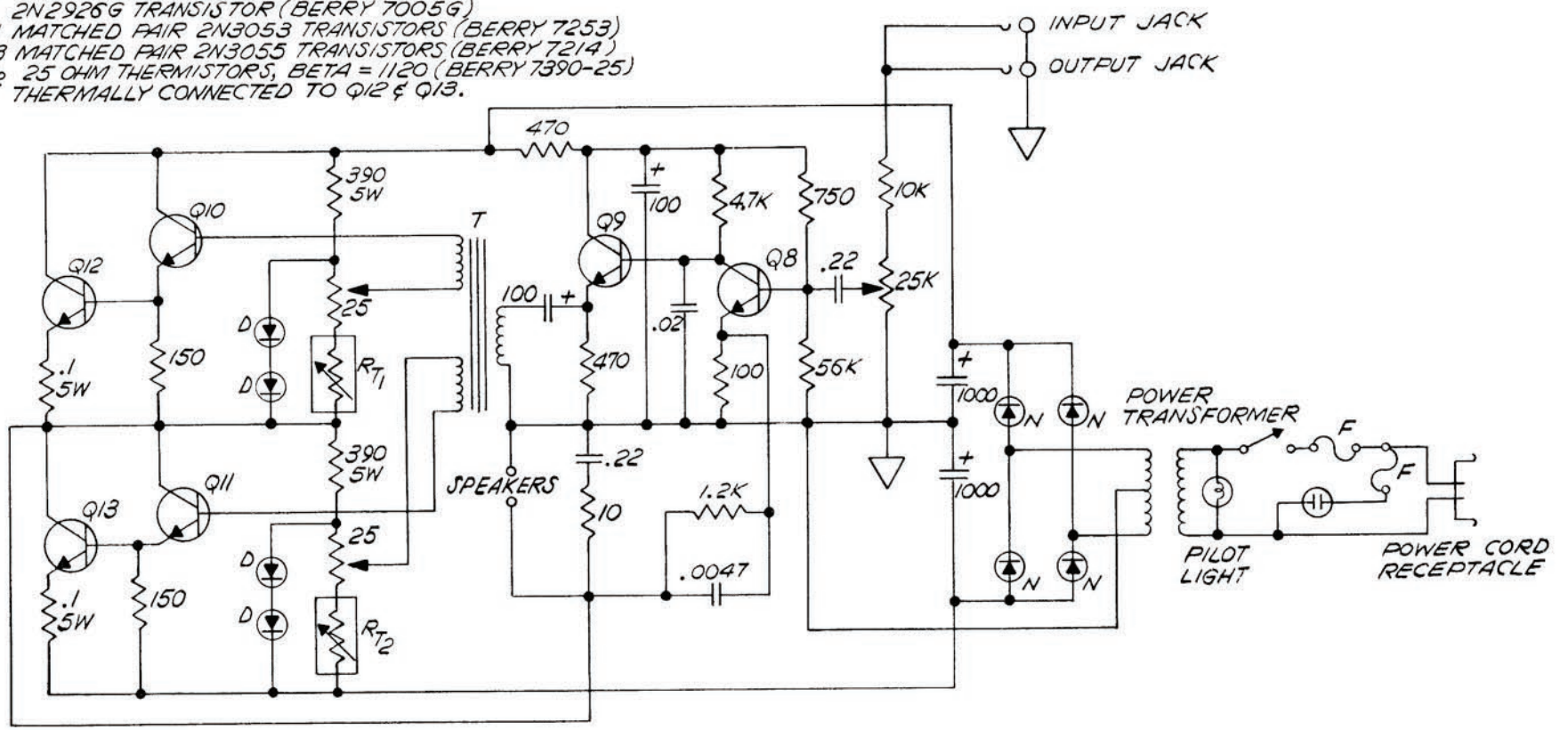

GIBSON
PLUS 50

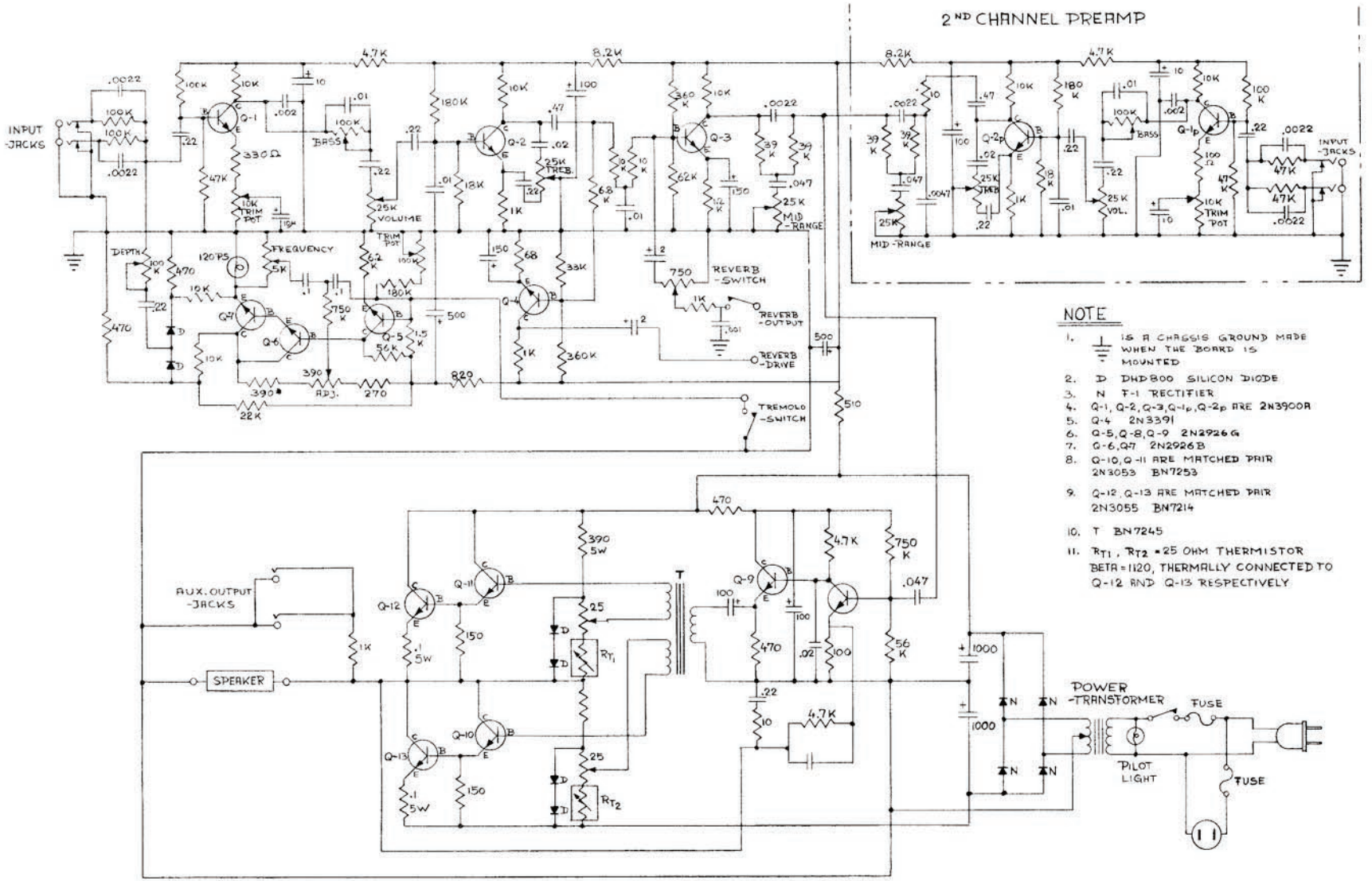

NOTE

1. ⏚ IS A CHASSIS GROUND MADE WHEN THE BOARD IS MOUNTED
2. D DHD800 SILICON DIODE
3. N F-1 RECTIFIER
4. Q-1, Q-2, Q-3, Q-1p, Q-2p ARE 2N3900A
5. Q-4 2N3391
6. Q-5, Q-8, Q-9 2N2926G
7. Q-6, Q-7 2N2926B
8. Q-10, Q-11 ARE MATCHED PAIR 2N3053 BN7253
9. Q-12, Q-13 ARE MATCHED PAIR 2N3055 BN7214
10. T BN7245
11. R_{T1}, R_{T2} = 25 OHM THERMISTOR BETA = 1120, THERMALLY CONNECTED TO Q-12 AND Q-13 RESPECTIVELY

SCHEMATIC
50WATT AMPLIFIER
3100 S

G I B S O N

100 WATT AMPLIFIER

MODEL GSS - 100

------ CONTENTS ------

	Page
SERVICE INFORMATION	
Bias Adjustment	1
Transistor Voltages	2
SCHEMATICS - SET "A"	
Interconnecting Diagram	3
Vibrato	4
Reverb	5
Treble Preamp	6
Bass Preamp	7
Power Supply	8
SCHEMATICS - SET "B"	
Interconnecting Diagram	9
Vibrato	10
Reverb	11
Treble Preamp	12
Bass Preamp	13
Power Supply	14
Printed Circuit Board Layouts	15
PARTS LIST	16

CHICAGO MUSICAL INSTRUMENT CO.
7373 N. Cicero Ave., Chicago, Illinois 60646

BIAS ADJUSTMENT

Transistor voltage readings & bias adjustment.

Improper Bias adjustment will most commonly result in a fuzzy tone (distortion) at medium playing levels, although occasionally all volume levels will be affected. Sometimes this fuzzy tone will tend to disappear after the amplifier has completely warmed up.

Two systems of Bias adjustment are shown below. It is recommended that the "Scope" system be used if at all possible, however, the "Approximation" system plus adjustment by ear may do if a scope is not available.

Bias Adjustment using an oscillascope.

1. Disconnect speakers from amplifier and connect a 4 ohm 200 watt dummy load and the oscillascope to the speaker terminals.
2. Connect a 100 HZ (1000 HZ on later Models) sine wave signal into the Bass channel, turn amplifier "on" and set volume to 30-50%.
3. Adjust Bias Pots on driver board to an approximate 1/3 clockwise position. Observe "scope" waveform, touch up Bias pot adjustment, going just beyond a perfect sine wave.

Bias Adjustment by approximation.

1. Set Bias Pots on driver board to an approximation 1/3 clockwise position.
2. While an instrument is being played through the amplifier at the volume level where distortion is heard, touch up Bias pot adjustment by "ear" to remove distortion. Do not adjust either Bias pot very far from the 1/3 clockwise positions.

I M P O R T A N T

Be certain output transistors and output transistor fuses are OK before adjusting Bias.

TRANSISTOR VOLTAGES

	Collector	Base	Emitter
VIBRATO/TREMOLO BOARD			
Q1	+12.	+.6	Ø
Q2	+12.	Ø	Ø
Q3	+6.6	+1.	+6
Q4	+6.6	+6	+5.4
Q5	+16.	+.32	+3
Q6	+12.	+3.9	+3.9
Q7	+16.	+3.7	+3.6
Q8	+12.5	+6.6	+6.6
TREBLE PREAMP			
Q1	+6.2	+1.5	+.3
Q9 or Q2	+4.1	+12	+12.2
Q10 or Q3	+6.6	+3.2	+2.7
Q11 or Q4	+10.0	+7.5	+.35
BASS PREAMP			
Q12	+2 to 10		Ø
Q13 or Q1	+6.6	+1.45	+1.
Q14 or Q2	+13.	+.85	+.4
Q15 or Q3	+8.4	+2.	
REVERB			
Q16 or Q3	+7.3	+12.	+11.5
Q17 or Q4	+7.3	+1.35	+.8
Q18 or Q1	+1.85	+.65	Ø
Q19 or Q2	+35.	+1.85	+1.3
POWER SUPPLY			
Q20	+2.25	+.26	+.25
Q21	+17.	+2.25	+1.65
Q22	+47	+17.	+16.5
Q23	+47	+1.05	+.5
Q24	Ø	-50	-50.5
Q25	+47	+.5	Ø
Q26	Ø	-50.5	-51

I M P O R T A N T

The above voltage readings were measured to ground with a Simpson Model 260 V.O.M. Voltage readings shown are intended only as a guide in troubleshotting. Voltages will vary from unit to unit due to normal manufacturing tolerances.

C A U T I O N

Exercise extreme care when making voltage measurements. Accidental shorting of transistor leads may damage transistors.

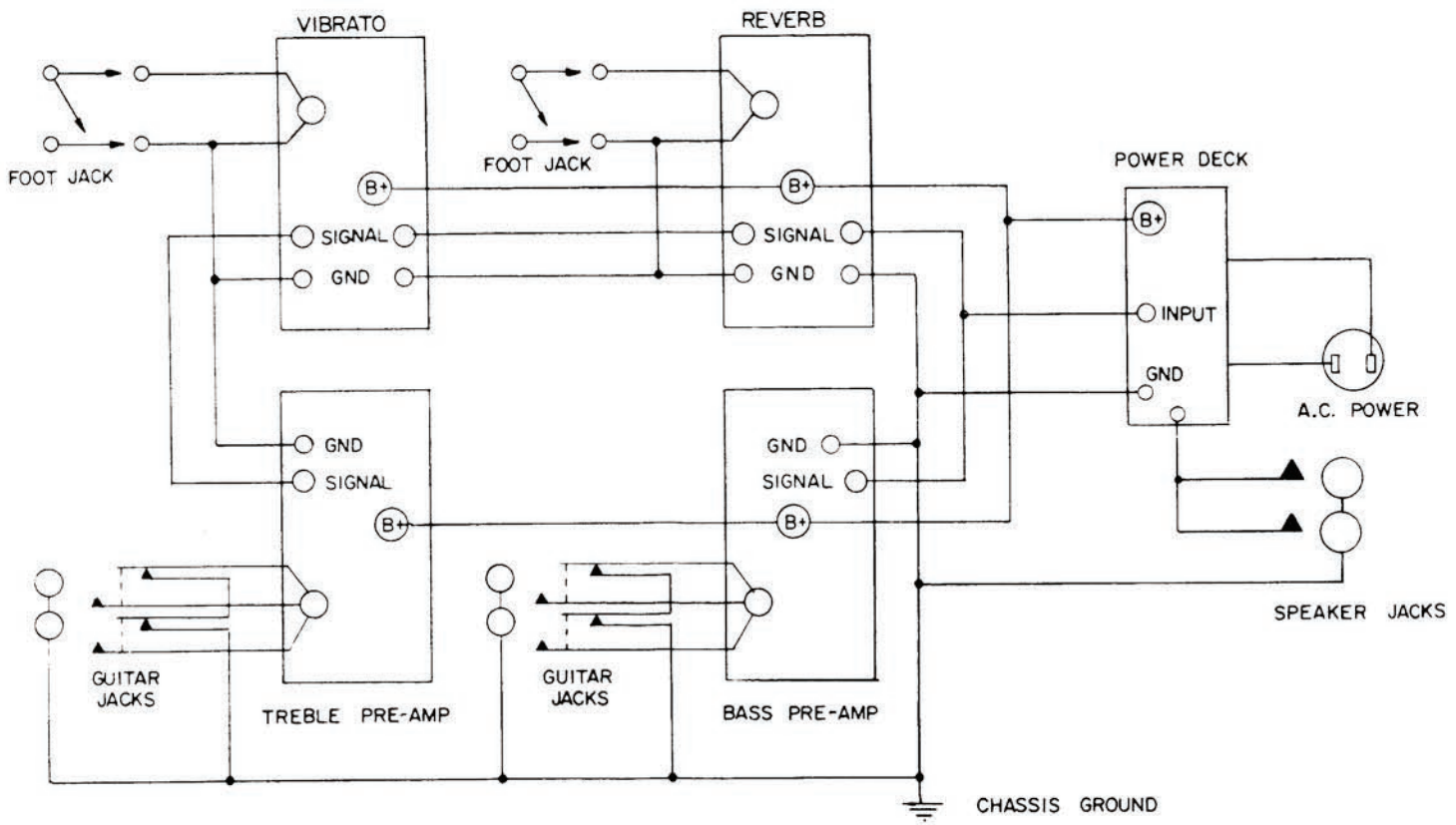

ALLOWABLE VARIATION ON ALL DIMENSIONS UNLESS OTHERWISE SPECIFIED: ANGLES ± ½° FRACTIONS ± 1/64 DECIMALS ± .005 HOLES + .002 − .000

APPROVED / CHECKED / DATE / LETTER	REVISIONS	FINISH	MATERIAL
	REMARKS: SET "A"		

100 W AMPLIFIER

NAME: INTERCONNECTING DIAGRAM 100 W. AMPLIFIER

SCALE	DATE	DRAWN	CHECKED	APPROVED

DWG. No. 3000 A

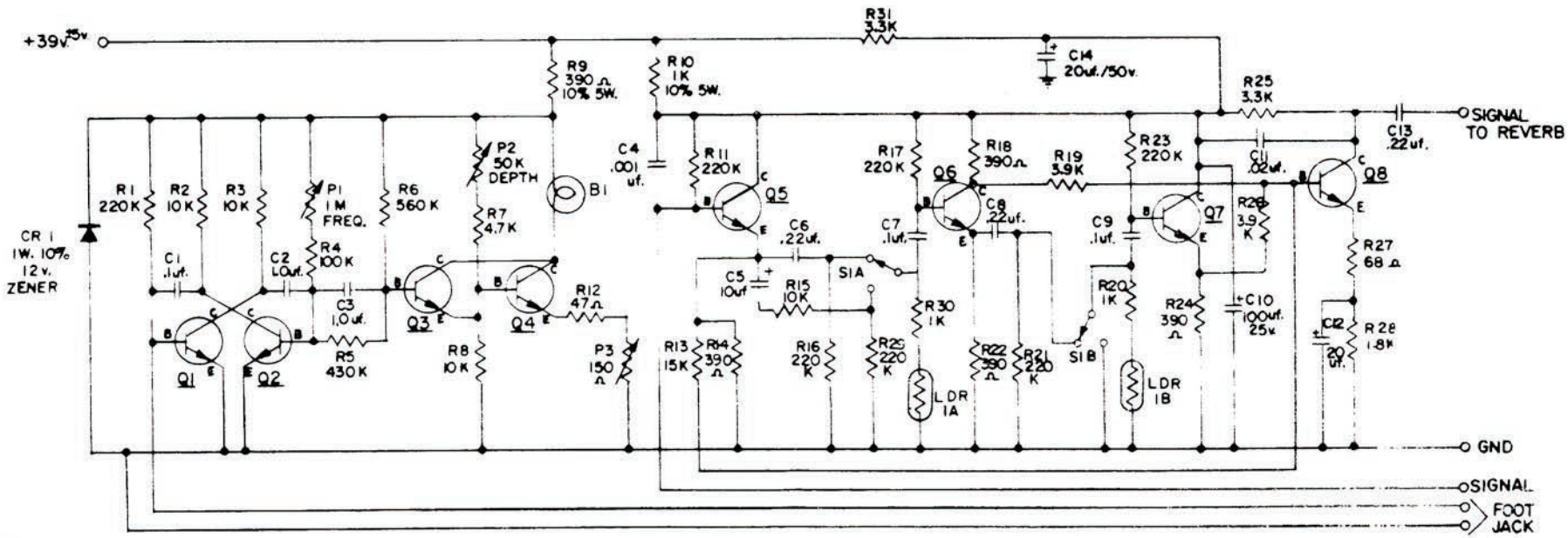

NOTE:

1. ALL RESISTORS ½ W. 10% CARBON UNLESS OTHERWISE NOTED.
2. ALL CAPACITORS 200 v. 20% IN MICROFARADS UNLESS OTHERWISE NOTED.
3. Q1-Q8 - 2N2926.
4. B1 IS SYLVANIA 6ES.
5. COMPONENT WITH BERRY P.N. 5058 IS A COMPOSITE OF B1, LDR 1A & LDR 1B.
6. S1 SHOWN IN 'VIBRATO' POSITION.
7. **EARLY PRODUCTION: R28 IS 1.8K.**
   R28 IS 3.3K.
   R31 & C14 NOT USED.

ALLOWABLE VARIATION ON ALL DIMENSIONS UNLESS OTHERWISE SPECIFIED: ANGLES ± ½° FRACTIONS ± 1/64 DECIMALS ± .005 HOLES + .002 − .000

APPROVED / CHECKED / DATE / REVISIONS / LETTER	FINISH	MATERIAL	100W Amplifier
	REMARKS: SET "A"	SCALE / DATE / DRAWN / CHECKED / APPROVED	NAME: VIBRATO
			DWG. No. 5056A

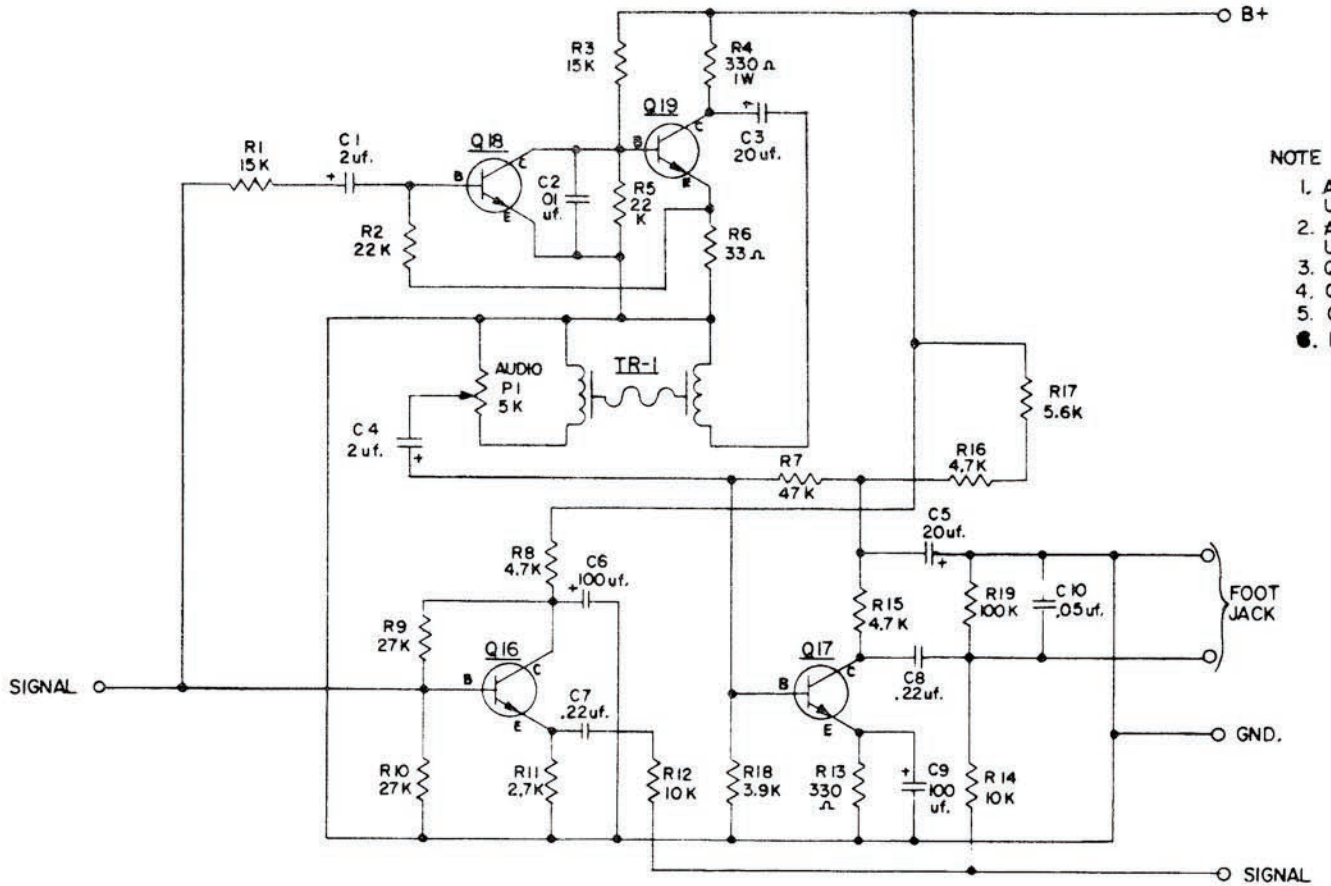

NOTE

1. ALL RESISTORS ½ WATT, 10% CARBON UNLESS NOTED
2. ALL CAPACITORS IN MICROFARADS UNLESS NOTED
3. Q16, Q18 - 2N2926
4. Q17 - 2N3391
5. Q19 - 2N3053
6. **EARLY PRODUCTION: R12 IS 4.7K. R19 & C10 NOT USED.**

ALLOWABLE VARIATION ON ALL DIMENSIONS UNLESS OTHERWISE SPECIFIED: ANGLES ± ½° FRACTIONS ± 1/64 DECIMALS ± .005 HOLES + .002 − .000

APPROVED / CHECKED / DATE / LETTER	FINISH	MATERIAL	100 W Amplifier
REVISIONS			NAME: REVERB
	SET "A"	SCALE / DATE / DRAWN / CHECKED / APPROVED	DWG. No. 5056A

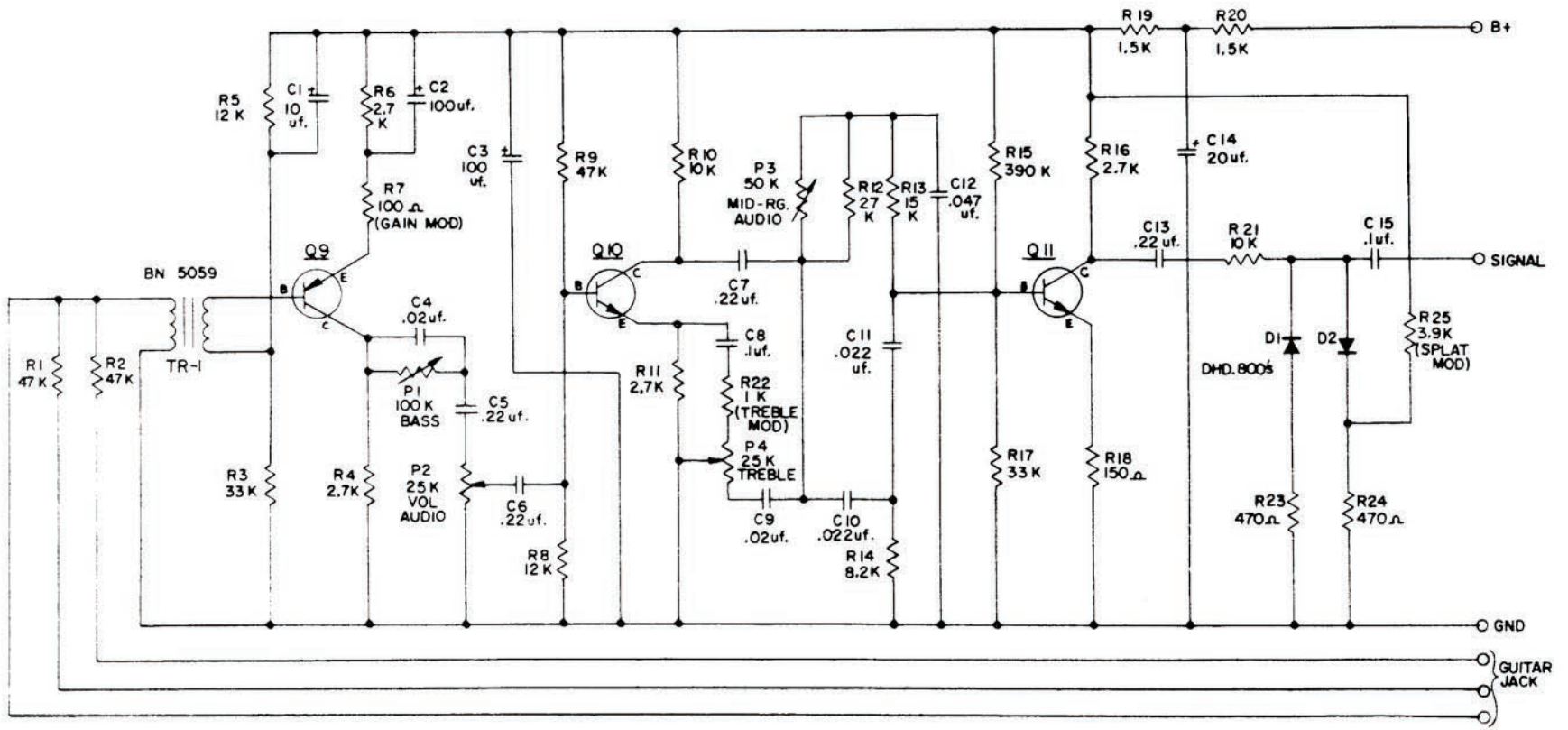

NOTE

1. R1, R2, R4, R6, R7 ARE CARBON FILM
2. ALL RESISTOR ½ WATT, 10% CARBON UNLESS OTHERWISE NOTED
3. ALL CAPACITORS ARE IN MICROFARADS UNLESS OTHERWISE NOTED
4. Q9 - 2N2613
   Q10 + Q11 - 2N3391
5. EARLY PRODUCTION: R7 IS 47 OHMS.
   C8 IS .22 MFD.
   R22 TO R25, D1, D2 & C15 NOT USED.

ALLOWABLE VARIATION ON ALL DIMENSIONS UNLESS OTHERWISE SPECIFIED: ANGLES ± ½° FRACTIONS ± 1/64 DECIMALS ± .005 HOLES + .002 − .000

APPROVED	FINISH	MATERIAL	100 W AmpLifiER
CHECKED			NAME
DATE	REMARKS		TREBLE PRE-AMP 100 WATT AMPLIFIER
REVISIONS	SET "A"	SCALE / DATE / DRAWN / CHECKED / APPROVED	DWG. No. 5054 A
LETTER			

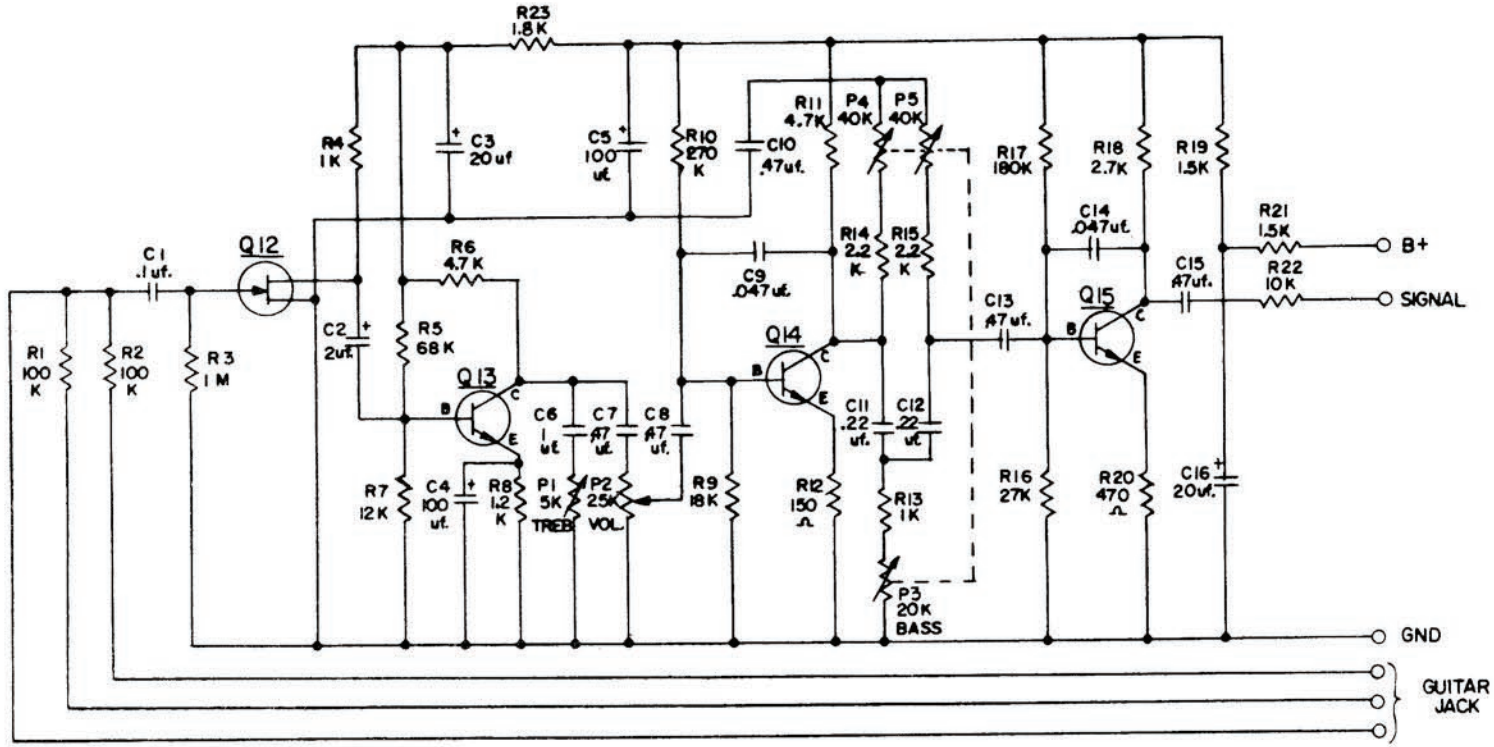

NOTE:

1. ALL RESISTORS ¼ WATT 10% CARBON UNLESS OTHERWISE NOTED
2. ALL CAPACITORS IN MICROFARADS UNLESS OTHERWISE NOTED
3. Q13 - Q15 - 2N3391
4. Q12 IS U1154 BERRY P.N. 7174
5. R1, R2, R3, R5, R7 ARE CARBON FILM RESISTORS
6. **EARLY PRODUCTION: R11 IS 1.5K. R14 & R15 ARE 1.2K. R22 IS 47K.**

ALLOWABLE VARIATION ON ALL DIMENSIONS UNLESS OTHERWISE SPECIFIED: ANGLES ± ½° FRACTIONS ± 1/64 DECIMALS ± .005 HOLES + .002 − .000

APPROVED / CHECKED / DATE / LETTER	REVISIONS	FINISH	MATERIAL
	REMARKS: SET "A"		

SCALE	DATE	DRAWN	CHECKED	APPROVED

100W AmpLifier

NAME: BASS PRE-AMP

DWG. No. 5053 A

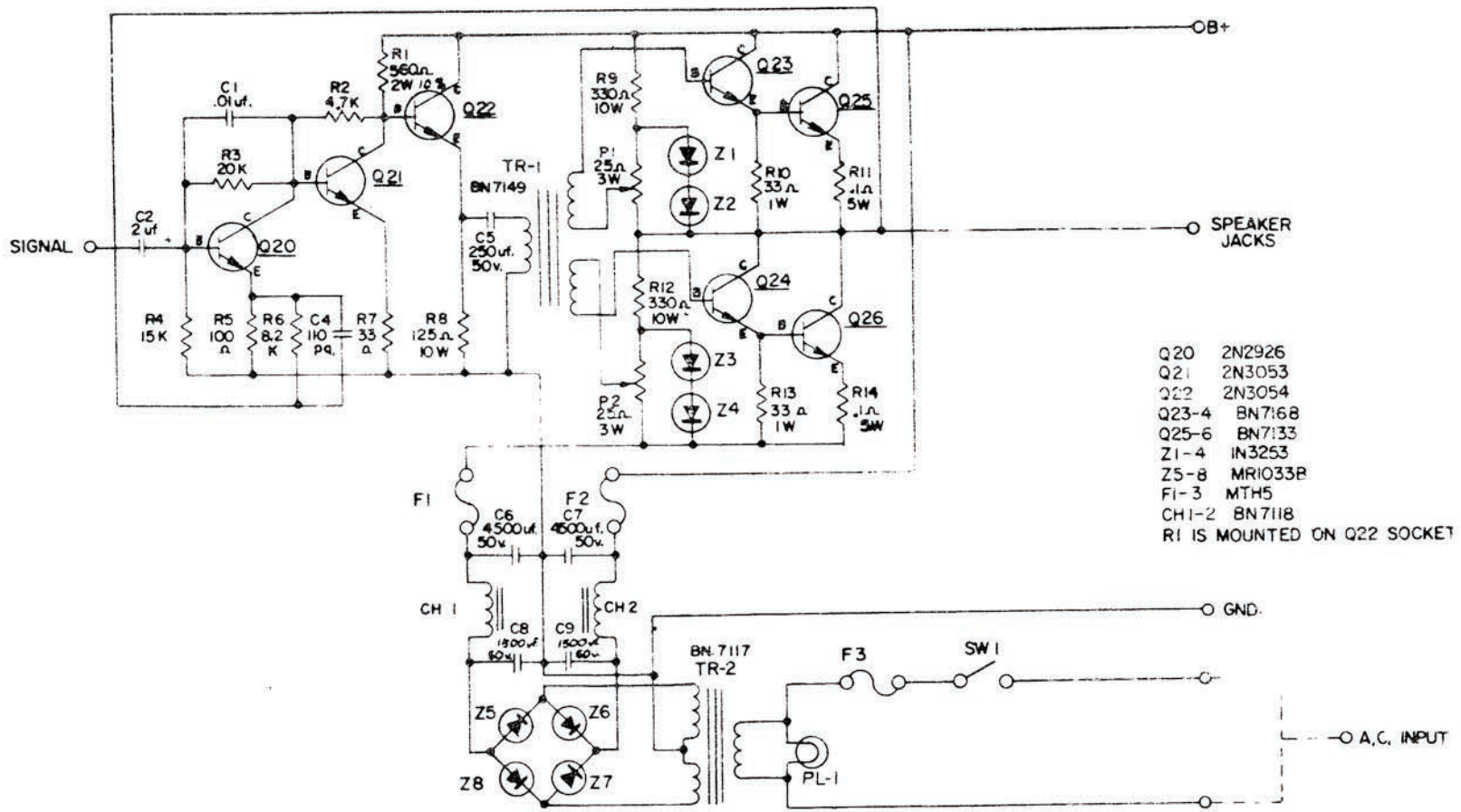

Q20 2N2926
Q21 2N3053
Q22 2N3054
Q23-4 BN7168
Q25-6 BN7133
Z1-4 IN3253
Z5-8 MR1033B
F1-3 MTH5
CH1-2 BN7118
R1 IS MOUNTED ON Q22 SOCKET

ALLOWABLE VARIATION ON ALL DIMENSIONS UNLESS OTHERWISE SPECIFIED: ANGLES ± ½° FRACTIONS ± 1/64 DECIMALS ± .005 HOLES + .001 — .000

APPROVED	FINISH	MATERIAL	100 W Amplifier
CHECKED			NAME: POWER SUPPLY 100 WATT AMPLIFIER
DATE	REMARKS: SET "A"		
REVISIONS		SCALE / DATE / DRAWN / CHECKED / APPROVED	DWG. No. 5048A
LETTER			

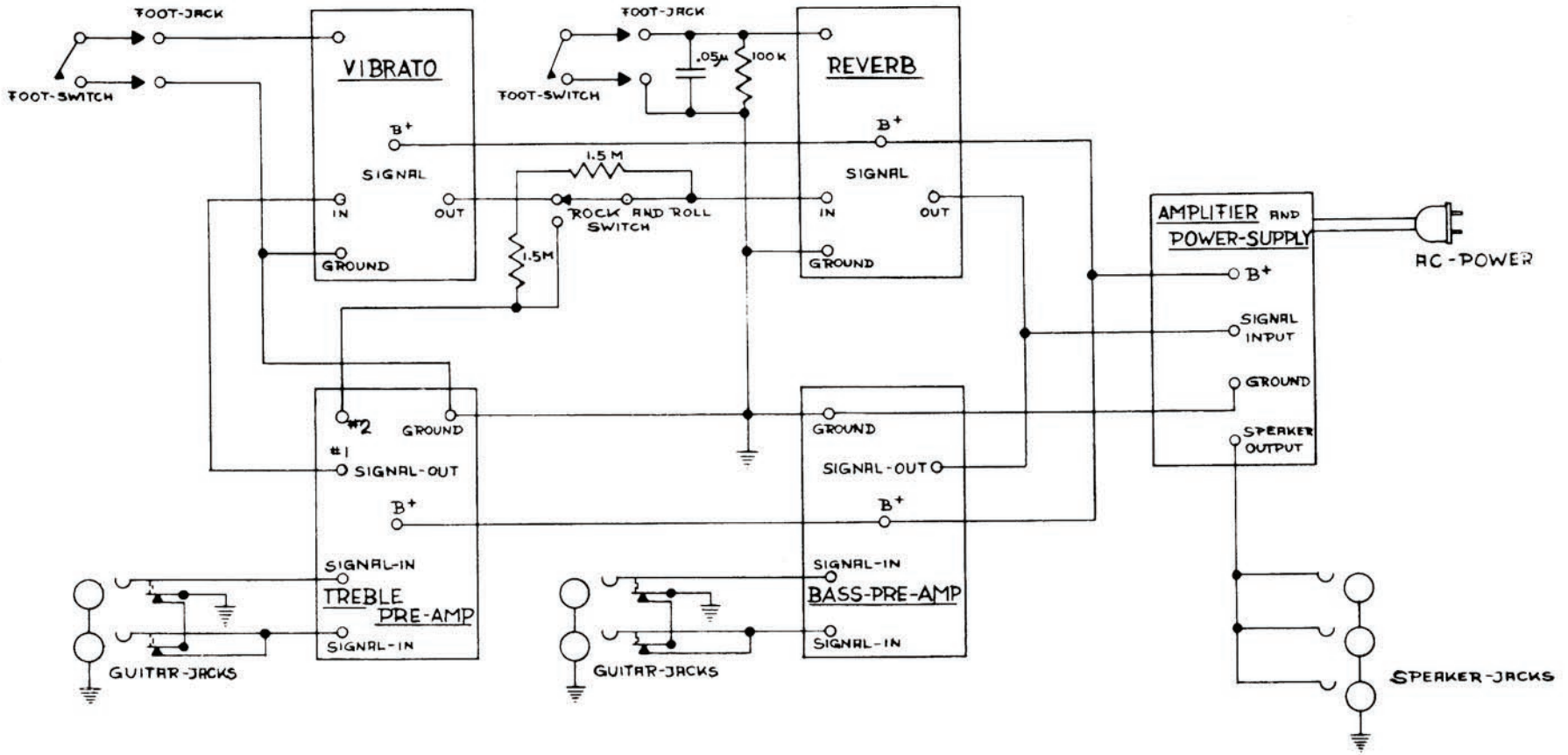

INTER-CONNECTING
-DIAGRAM
100 W. AMP.
SET "B" 3002 S

Q-1,Q-2,Q-4	2N2926 B, R or X
Q-3,Q-8	2N2926 Y or G
Q-5	2N2926 R, X or Y
Q-6,Q-7	2N2926 X

Z-1	12V ZENER 1W ±10%
R-1	390Ω 5W ±10%
R-2	1000Ω 5W ±10%

#7380 A COMBINATION OF 2 PHOTOCELLS AND 1 LIGHT BULB

SWITCH 1 "A" AND "B" VIBRATO-TREMOLO SHOWN IN VIBRATO POSITION

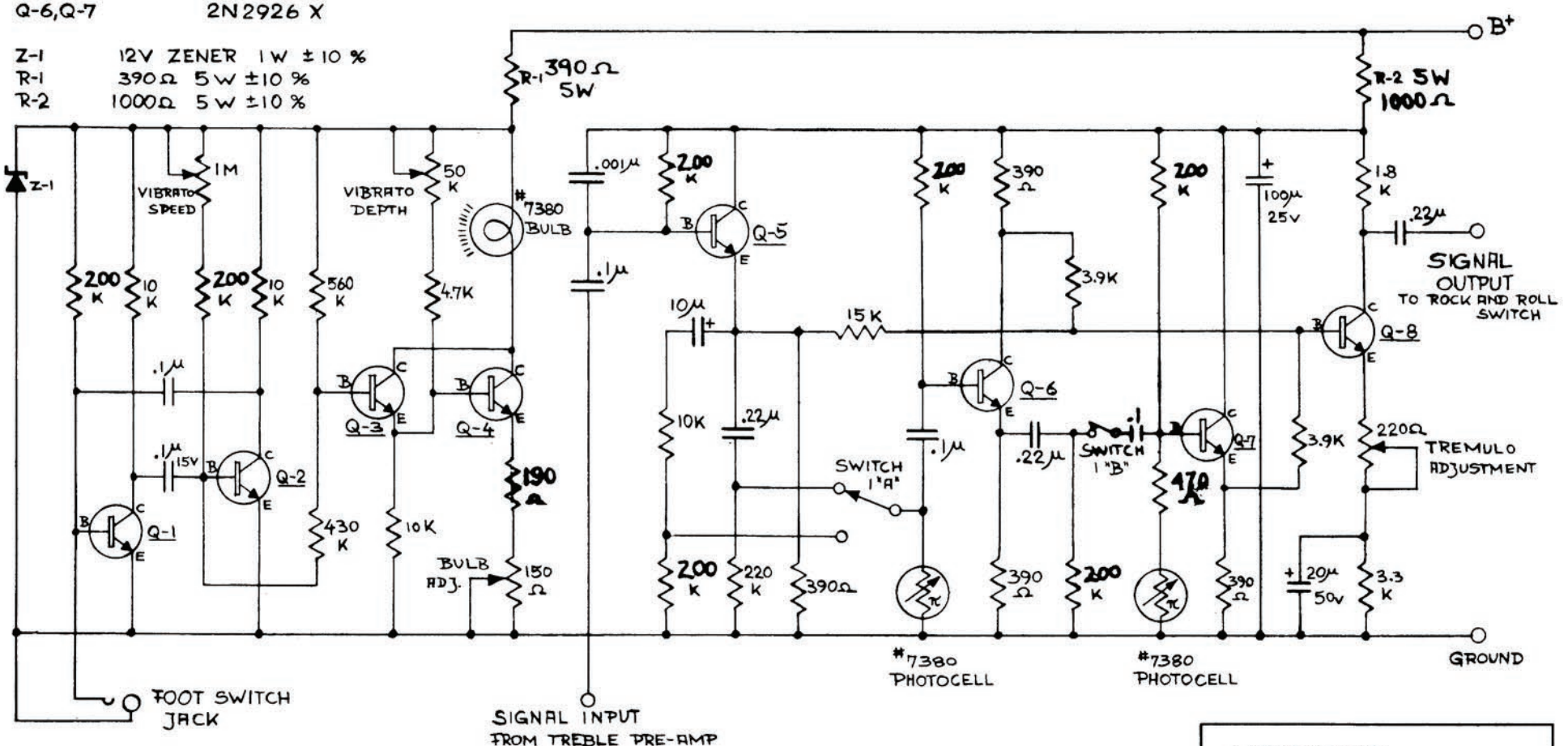

VIBRATO

SET "B" 5055 S

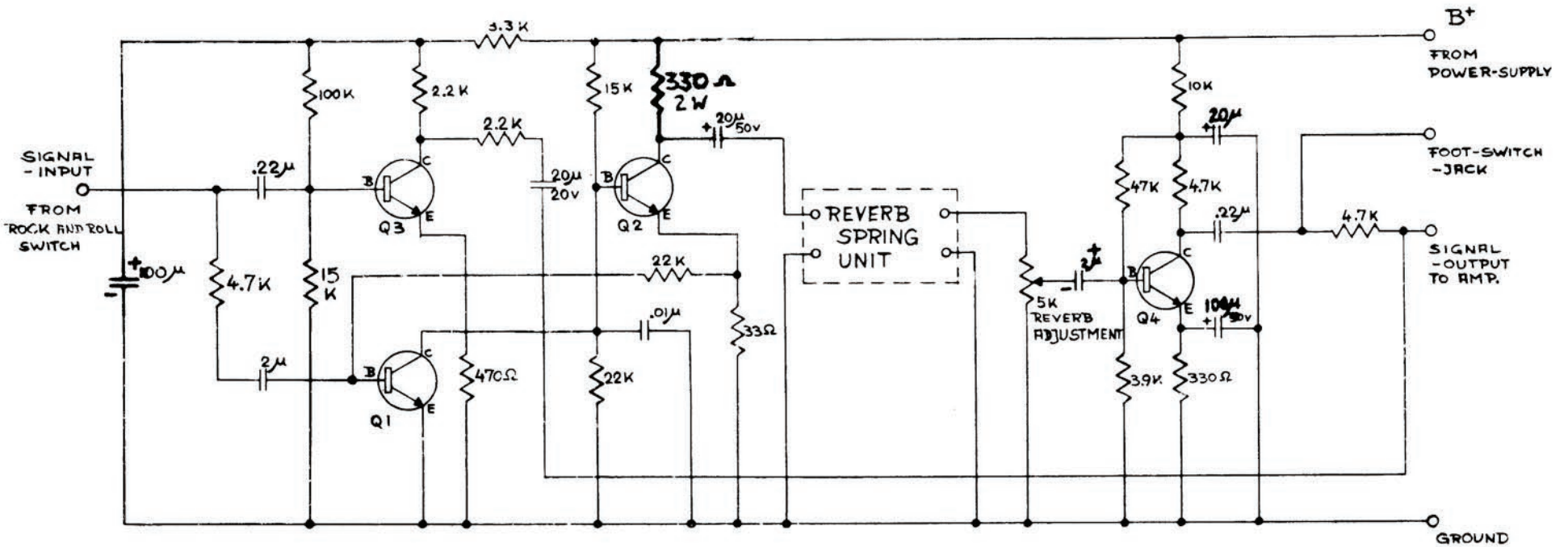

Q1	2N 2926 R - 2N 2926 B	
Q2	2N 3053 - RCA 40314	
Q3	2N 2926 R - 2N2926 X - 2N 2926 Y	
Q4	2N 3900 A	

REVERB-UNIT
5056 S
SET "B"

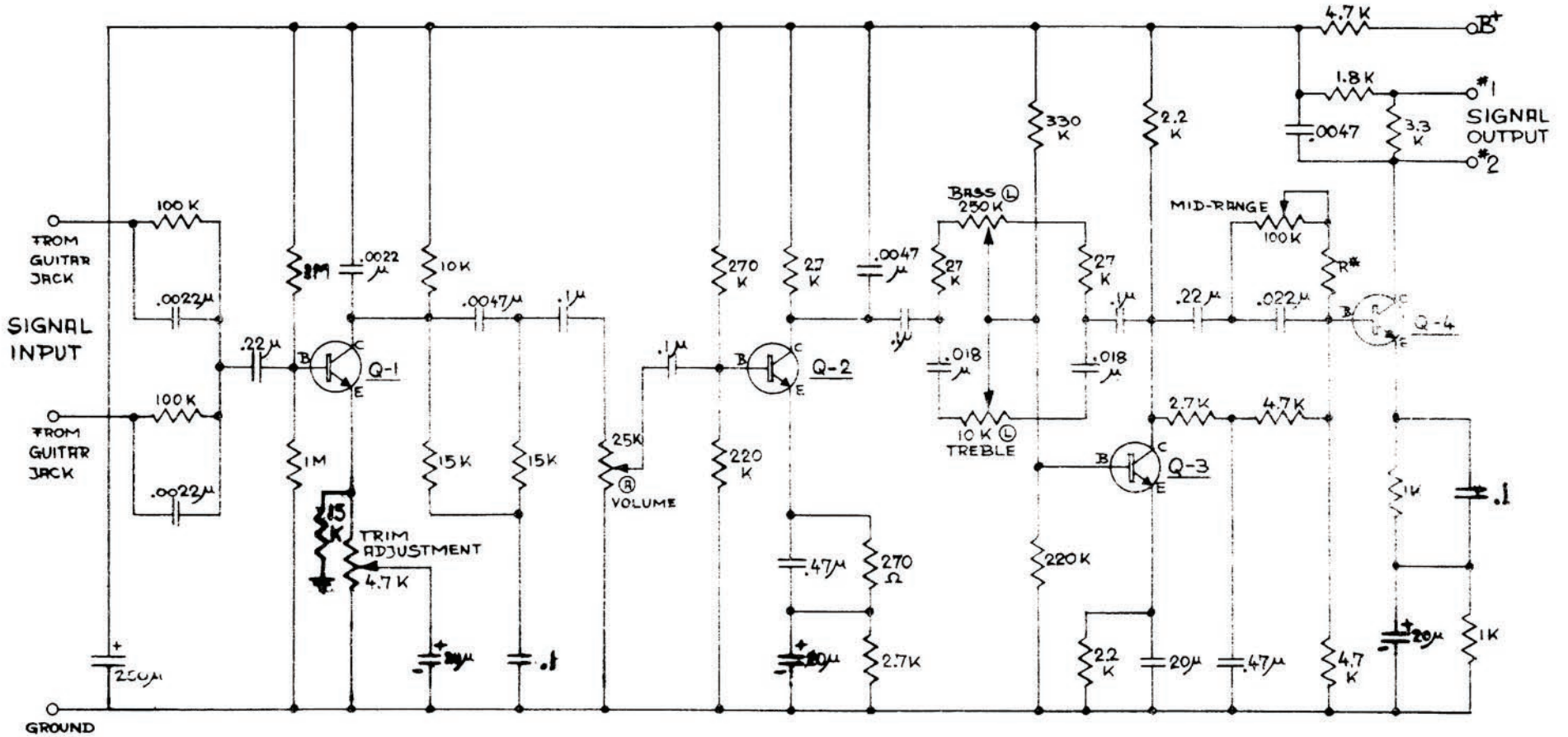

Q-1 2N3900A -BN7517
Q-2 2N3900A -BN7517
Q-3 2N3900A -BN7517
Q-4 2N3900A -BN7517

SIGNAL OUTPUT
#1 HIGH OUTPUT TO VIBRATO
#2 LOW OUTPUT TO ROCK AND ROLL SWITCH

R* = JUMPER RESISTOR
(A) = AUDIO TAPER
(L) = LINEAR TAPER

TREBLE PRE-AMP
SET "B" 5094 S

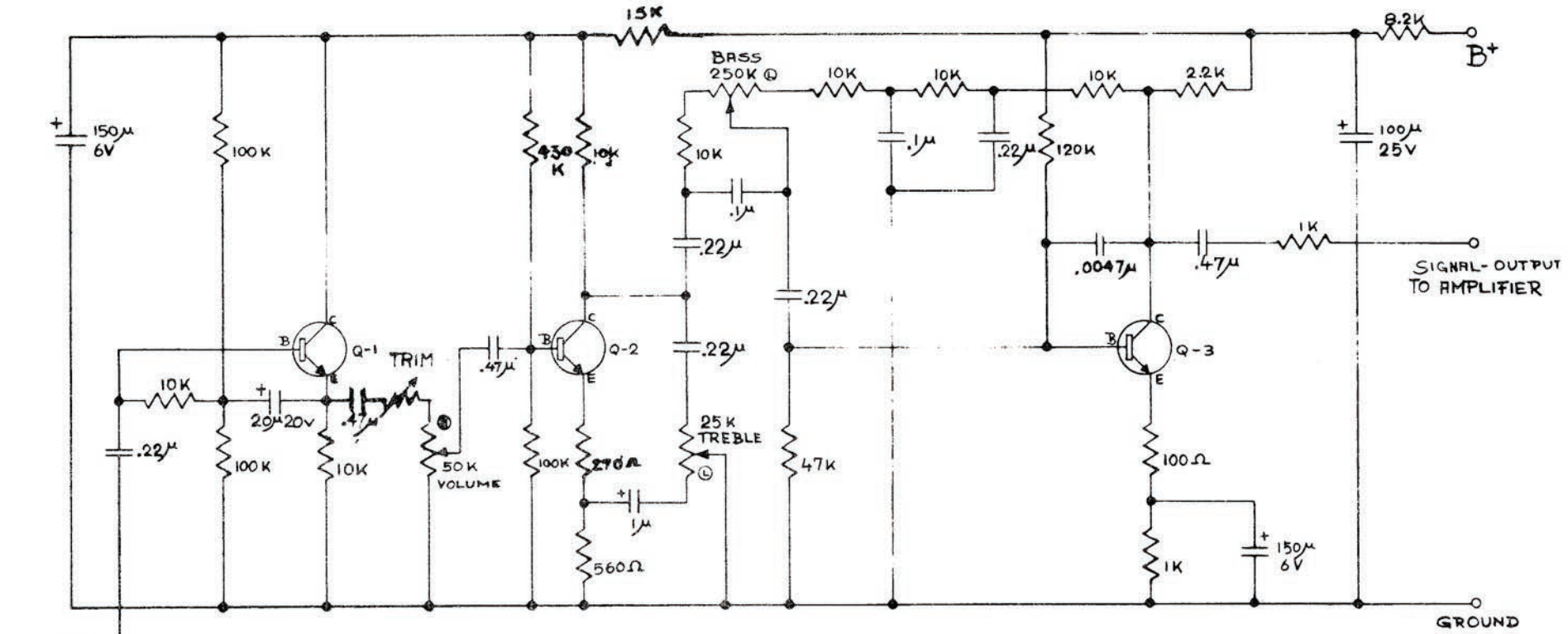

Q-1 2N3900A - BN 7518
Q-2 2N3900A - BN 7518
Q-3 2N3900A - BN 7518

(A) AUDIO-TAPER
(L) LINEAR-TAPER

BASS-PREAMP

SET "B" 5093S

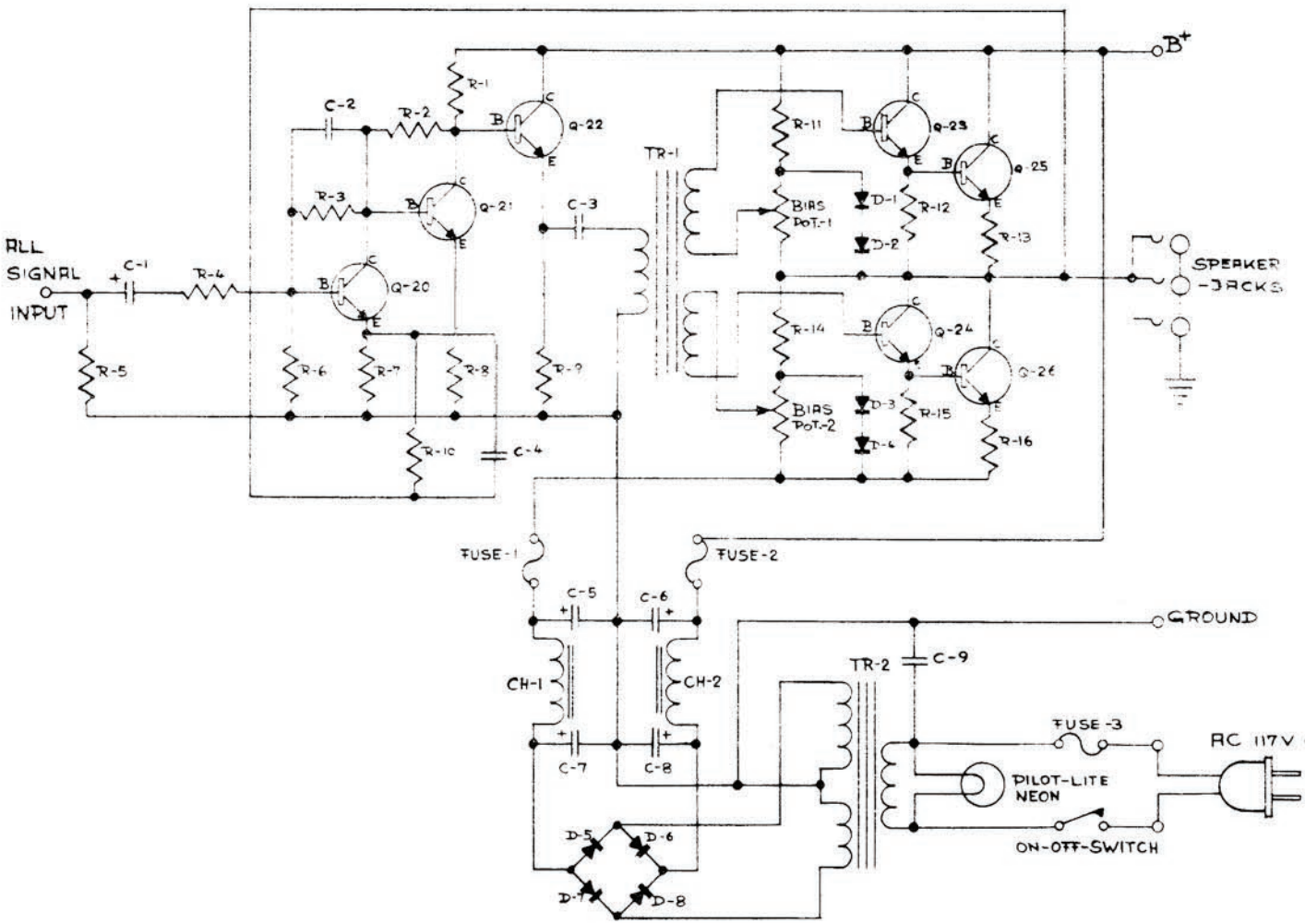

Q-20	2N2926
Q-21	2N3053
Q-22	2N3054
Q-23-24	BN7168
Q-25-26	BN7133
R-1	560 Ohm 2W ± 10%
R-2	4.7K
R-3	20K
R-4	2.7K
R-5	2.2K
R-6	15K or 100K*
R-7	100
R-8	33 Ohm
R-9	125 Ohm 10W or 390* Ohm 5W ± 10%
R-10	8.2K
R-11-14	330 Ohm 10W ± 10%
R-12-15	33 Ohm 1W ± 10%
R-13-16	.1 Ohm 5W or 33* Ohm 5W ± 10%
D-1-2-3-4	DIODE IN3253
D-5-6-7-8	DIODE MR1033B
FUSE-1-2-3	#MTE 5 (5AMP.)
C-1	20 UF
C-2	.01
C-3	250 50V
C-4	110 PC
C-5-6	4500/50
C-7-8	1500/50
C-9	01 UF 600V
TR-1	BN7149
TR-2	BN7604
BIAS-POT.-1-2	25 Ohm 3W
CH-1-2	BN7118

*Later Production

POWER-SUPPLY
100 W. AMPLIFIER
SET "B" 3002

TREBLE BOARD

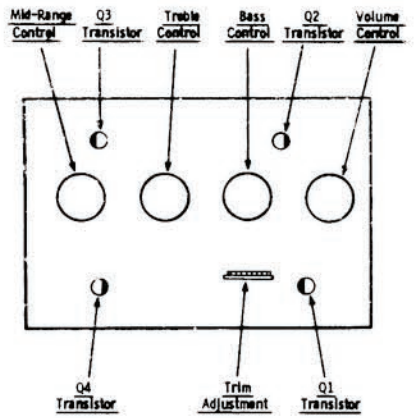

VIBRATO BOARD

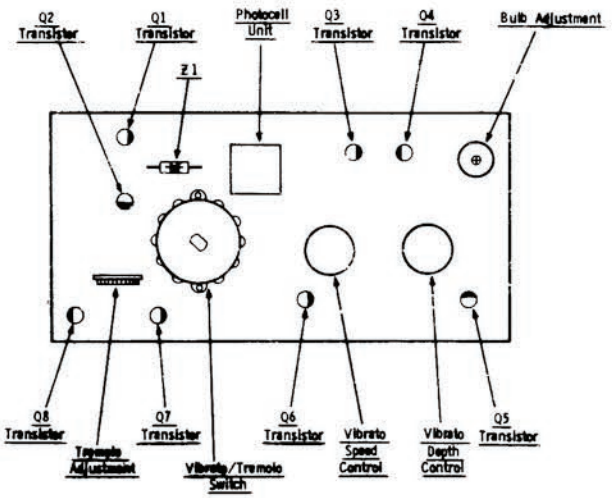

AMPLIFIER/POWER SUPPLY BOARD

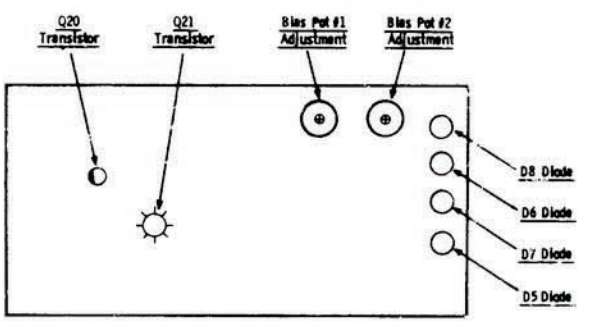

PRINTED CIRCUIT BOARD LAYOUTS

Dwg. No. 1 Sht. 1

BASS BOARD

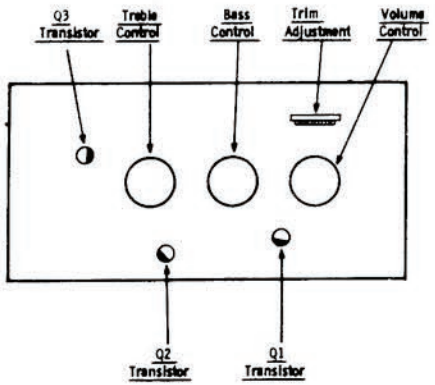

AMPLIFIER/POWER SUPPLY CHASSIS

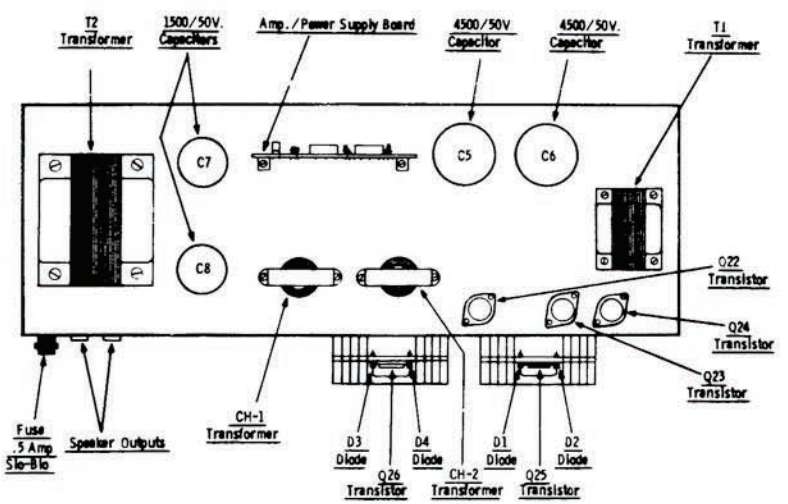

REVERB BOARD

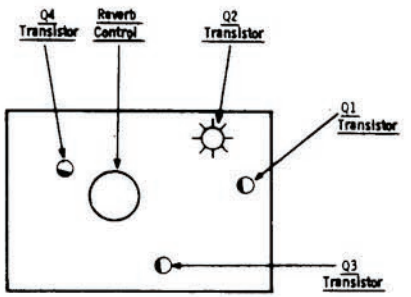

PART	DESCRIPTION	PART NUMBER
Assembly	Footswitch (reverb & Tremolo) Complete	997-015484
Capacitor	Electrolytic 1500/50V	945-013696
Capacitor	Electrolytic 4500/50V	945-013697
Capacitor	Trantalum 1 Mfd 15V	945-013794
Capacitor	Electrolytic 250 Mfd 50V	945-013795-1
Capacitor	Electrolytic 20 Mfd 50V	945-013795-2
Capacitor	Electrolytic 10 Mfd 20V	945-013796-2
Capacitor	Electrolytic 2 Mfd 20V	945-013796-3
Capacitor	Electrolytic 100 Mfd 25V	945-013797-1
Capacitor	Electrolytic 100 Mfd 25V & 20 Mfd 50V	945-013798
Capacitor	Electrolytic 150 Mfd 6V	945-013799
Choke	Power	956-013693
Cord	Power (A.C.)	989-013701
Diode	Rectifier (IN3253)	919-013677
Diode	Zener (12V 1 watt)	919-013732
Driver	For Horn (HC12)	985-002938
Feet	Black Rubber	916-013762
Feet	Black Rubber	916-013763
Feet	Black Rubber	916-013776
Fuse	5 Amp Regular (AGC-5)	939-013304-8
Fuse	5 Amp Slo-Blo	939-015489
Handle	With hardware	930-013766
Horn	Deflection (HC12) Driver not Inc.	985-001978
Jack	Phone type with hardware	910-013707
Jack	With ground contact	910-013720
Jack	No ground contact	910-013721
Jack	Footswitch	910-013722
Knob	Red with arrow	915-013717
Knob	Red numbered	915-013718
Knob	Black numbered	915-013719
Light	Pilot with hardware	939-013716
Photocell	Assembly (7380)	948-013734
Photocell	Assembly #5058	948-015485
Potentiometer	Bias Adj. 25 Ohms	925-013687
Potentiometer	50K Audio	925-013727
Potentiometer	1 M C.C.W. Audio	925-013728
Potentiometer	220 Ohms Linear	925-013729
Potentiometer	150 Ohms	925-013733
Potentiometer	5 K Linear	925-013742
Potentiometer	25 K Linear	925-013746
Potentiometer	250K Audio	925-013747
Potentiometer	10 K Variable	925-013748
Potentiometer	100K C.C.W. Audio	925-013749
Potentiometer	10 K Linear	925-013750
Potentiometer	250K	925-013751
Potentiometer	25 K Audio	925-013752
Resistor	1000 Ohms 3 Watt	924-013735
Resistor	390 Ohms 5 Watt	924-013736
Resistor	Power 330 Ohms 10 Watt	924-013800-1
Resistor	Power 125 Ohms 10 Watt	924-013800-2
Resistor	Power .1 Ohm 5 Watt	924-013801-1
Resistor	Power 560 Ohms 2 Watt	924-013802-1
Resistor	390 Ohms 10 Watt (later Prod.)	924-015486
Resistor	.33 Ohms 5 Watt (later Prod.)	924-015487

PART	DESCRIPTION	PART NUMBER
Reverb	**Assembly**	984-012419
Speaker	4 used (HC12)	985-009961
Speaker	4 used (SC10 Cabinet)	985-013778
Switch	A.C. Power with hardware	960-013715
Switch	Vibrato/Tremolo (wafer)	960-013730
Switch	S.P.S.T. (Vibrato-Reverb)	960-003574
Switch	Rock & Roll	960-015488
Transistor	Power Output (2N3055)	992-004091
Transistor	General (2N2926)	991-013683
Transistor	Amplifier (2N3053 or 40314)	992-013684
Transistor	(2N3054)	992-013705
Transistor	100V Rating (2N3054)	992-004092
Transistor	(2N3391)	992-013738
Transistor	(2N3900A)	991-013740
Transformer	Power	954-013692
Transformer	Driver	955-013694

PARTS INFORMATION

Standard Parts

Replacements for all standard electronic parts and hardware can be purchased directly from local suppliers generally in less time than would be required to obtain them from the factory.

Special Parts

In addition to the standard replacement parts, special electronic parts and mechanical parts are also used. These parts are manufactured by and to the specifications of the factory. Order these parts directly from the factory since they would be difficult or impossible to obtain from other sources.

Parts Ordering

When ordering parts be sure to include the following information:

1. Model and Serial Number
2. Part Number
3. A description of the part
4. Specify how you want the part shipped.

Most special electronic parts and mechanical parts will have a part number stamped on them. In the event that the part number is missing, or you are unable to read the part number, a complete description of the part and where it is used will allow the factory to fill your parts order. When parts are ordered in the proper manner the factory is able to fill your orders promptly – delays that might result are avoided.

ADDRESS PARTS ORDERS TO

C.M.I. SERVICE DEPT.

7301 North Cicero

Chicago, Illinois 60646

IMPORTANT

In any correspondence concerning this instrument ALWAYS INCLUDE MODEL AND SERIAL NUMBERS.

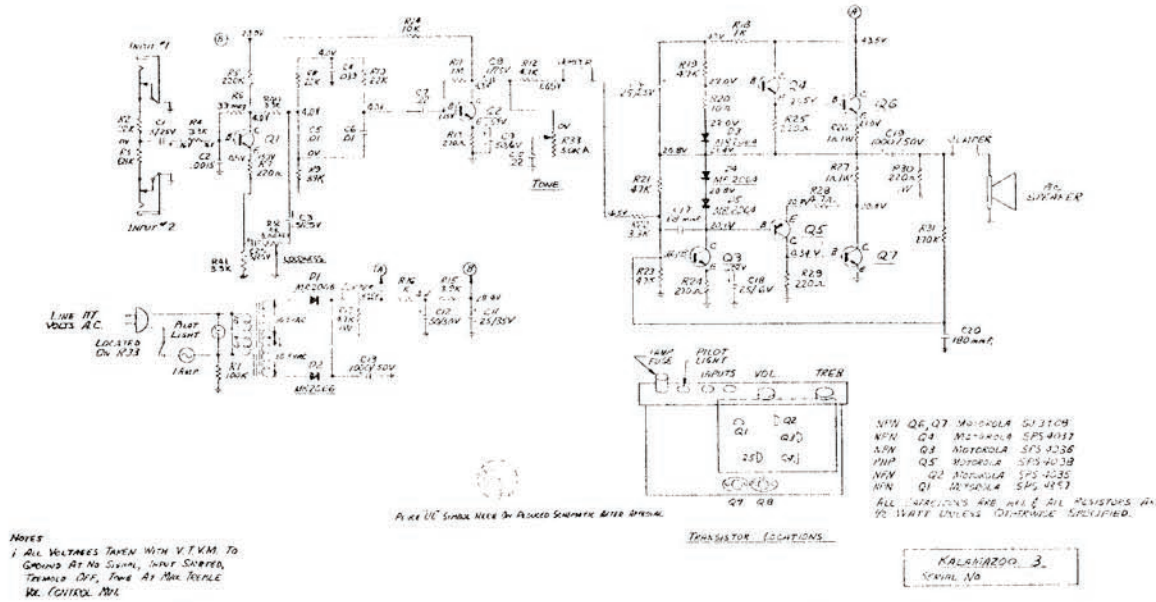

TUL-4024 A PRODUCT OF C.M.I. ELECTRONICS - CHICAGO, ILL. 110-120 V. 60 CYCLES 0.3 AMP.

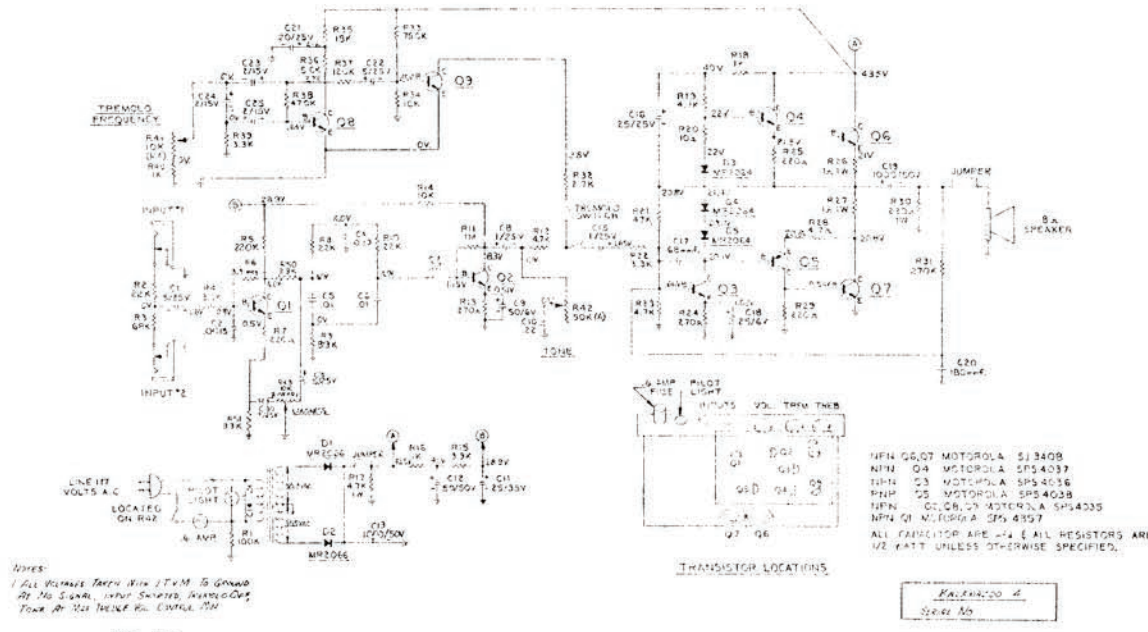

TUL-4025 A PRODUCT OF C.M.I. ELECTRONICS - CHICAGO, ILL. 110-120 V. 60 CYCLES 0.3 AMP.



SERVICE
MANUAL

Gibson

GTR-600
AMPLIFIER

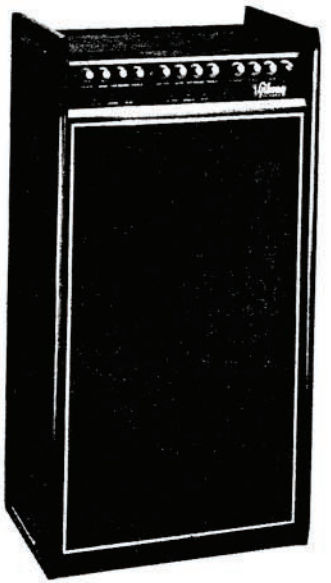

GTR-600
AMPLIFIER

FEATURES

- All Solid State Design
- Separate Amplifiers for Treble and Bass
- Power Output: 120 Watts RMS; 360 Watts Peak Music Power
- 2 Channels (Normal and Reverb)
- 6 Instrument Inputs
- Reverb
- Tremolo
- Footswitch for Reverb and Tremolo
- 3 High-Fidelity Speakers (2 specially designed 12-inch extra-heavy-duty woofers and 1 super-efficient horn speaker)
- Normal Channel Controls
  Volume—Bass—Midrange—Treble
- Reverb Channel Controls
  Volume—Bass—Midrange—Treble—Trem Level—Trem Speed—Reverb Level—Off/On/Polarity
- Auxiliary Amplifier Jack
- Pilot Light
- Leslie Output Jack (Intended for Cordovox Leslie Model CL-10)

DESCRIPTION

- Semi-Rigid Vinyl on both side panels gives protection from every angle
- Heavy-Duty Black Vinyl Covering—washable and scuff-resistant
- Retractable Carrying Handles
- Attractive Wood-Grained Metal Control Panel
- Plug-In Casters

SPECIFICATIONS

- 29 Silicon Transistors
- 6 Silicon Diodes
- Solid-State Rectifier Circuit
- Dimensions: 42½" high x 22" wide x 14½" deep
- Weight: 90 lbs.
- Power Requirements: 120 Volt AC, 60 cycle

ACCESSORY (available at additional cost):

- Simulated Leather Cover

PARTS LIST

THE PARTS LIST CONTAINS THE FOLLOWING INFORMATION:

1. Name of Part
2. Value, Tolerance and Code (when important)
3. Brief description
4. Where the part is found (assembly, printed circuit board and etc.)
5. Schematic Reference Number
6. PART NUMBER - - - USE IT!

This parts list includes all standard stock replacement parts. No attempt has been made to include every nut, bolt and screw. If the necessity for a non-listed part arises, please write describing the part's location and function as well as model and serial number of the unit.

PARTS LIST

CROSS-OVER DRIVER BOARD

PART	DESCRIPTION	SCHEMATIC REFERENCE	PART NUMBER
Assembly	Driver Board	.....	997-010994
Capacitor	Ceramic .001 PF 500V....	.....	947-002630-102
Capacitor	Ceramic 270 PF 500V....	.....	947-002630-271
Capacitor	Electrolytic 1 UF 25V....	.....	945-008895-38
Capacitor	Electrolytic 1500 UF 15V.	.....	945-008895-37
Capacitor	Mylar .22 UF 50V.....	.....	946-002155-224
Capacitor	Mylar .47 UF 50V.....	.....	946-002155-474
Capacitor	Mylar .022 UF 50V.....	.....	946-002155-223
Capacitor	Mylar .033 UF 100V.....	.....	946-005872-46

PARTS LIST

PART	DESCRIPTION	SCHEMATIC REFERENCE	PART NUMBER
Transistor	Power	Q18, 20	992-004092
Transistor	Power	Q19, 21, 25, 26 ..	992-004091
Transistor	Aux. Output Emitter Follower	Q27 ...	991-008393

PREAMP BOARD NO. 1

Assembly	Preamp Board No. 1.....	.....	996-010998
Capacitor	Ceramic .001 UUF 500V..	.....	947-002630-102
Capacitor	Electrolytic 25 UF 5V....	.....	945-008895-51
Capacitor	Electrolytic 1 UF 25V....	.....	945-008895-38
Capacitor	Mylar .22 UF 50V.....	.....	946-002155-224
Capacitor	Mylar .033 UF 50V.....	.....	946-002155-333
Capacitor	Mylar .001 UF 50V.....	.....	946-002155-102
Capacitor	Mylar .047 UF 50V.....	.....	946-002155-473
Capacitor	Mylar .022 UF 50V.....	.....	946-002155-223
Capacitor	Mylar .12 UF 50V.....	.....	946-002155-124
Capacitor	Mylar .1 UF 50V.....	.....	946-002155-104
Potentiometer	Bass	VR3 ...	925-010435-1
Potentiometer	Midrange	VR1 ...	925-010435-7
Potentiometer	Treble	VR5 ...	925-010435-3
Potentiometer	Volume	VR2, 4 .	925-010435
Transistor	Guitar Input Amp.....	Q1	991-011706
Transistor	Emitter Follower, Output Preamp	Q2, 4 ..	991-008393
Transistor	Feedback Preamp	Q3	991-011705

PREAMP BOARD NO. 2

Assembly	Preamp Board No. 2.....	.....	996-010999
Capacitor	Ceramic .001 PF 500V....	.....	947-002630-102
Capacitor	Electrolytic 1 UF 25V....	.....	945-008895-38
Capacitor	Mylar .082 UF 20V.....	.....	946-002155-823
Capacitor	Mylar .068 UF 50V.....	.....	946-002155-683
Capacitor	Mylar .047 UF 50V.....	.....	946-002155-473
Capacitor	Mylar .022 UF 50V.....	.....	946-002155-223
Capacitor	Mylar .22 UF 50V.....	.....	946-002155-224
Capacitor	Mylar .12 UF 50V.....	.....	946-002155-124
Capacitor	Mylar .1 UF 50V.....	.....	946-002155-104
Coil	.....	L1	952-003308
Potentiometer	Bass	VR8 ...	925-010435-1
Potentiometer	Midrange	VR6 ...	925-010435-2
Potentiometer	Treble	VR10 ..	925-010435-3
Potentiometer	Volume	VR7, 9 .	925-010435
Transistor	Emitter Follower, Output Preamp	Q6, 8 ..	991-008393

PARTS LIST

PART	DESCRIPTION	SCHEMATIC REFERENCE	PART NUMBER
Transistor	Feedback Preamp	Q7	991-011705
Transistor	Guitar Input Amp	Q5	991-010461

REVERB AND TREMOLO FOOT-SWITCH ASSEMBLY

Assembly	Complete Footswitch		997-012447
Plug	Stereo Phone		910-012679
Switch	S.P.D.T.		960-012474
Switch	S.P.S.T.		960-003574

TONE CABINET ASSEMBLY

Bulb	Light		939-012678
Caster			978-012854
Socket	Bulb		906-012857
Speaker	Horn		985-010425
Speaker	12"		985-009961
Transformer	Power		955-010428

TREMOLO-REVERB BOARD

Assembly	Tremolo-Reverb Board		996-010997
Capacitor	Ceramic 100 UUF 500V		947-002630-101
Capacitor	Electrolytic 200 UF 20V		945-010448
Capacitor	Electrolytic 5 UF 20V		945-008895-25
Capacitor	Electrolytic 4 UF 15V NP		945-008895-40
Capacitor	Electrolytic 1.4 UF 20V		945-008895-4
Capacitor	Electrolytic 1 UF 25V		945-008895-38
Capacitor	Mylar .12 UF 50V		946-002155-124
Capacitor	Mylar .01 UF 50V		946-002155-103
Capacitor	Mylar .022 UF 50V		946-002155-223
Capacitor	Mylar .047 UF 50V		946-002155-473
Capacitor	Mylar .0047 UF 50V		946-002155-472
Potentiometer	Intensity	VR12	925-010435-5
Potentiometer	Reverb	VR13	925-010435-6
Potentiometer	Tremolo Speed	VR11	925-010435-4
Photocell	Tremolo Raysistor	P1	948-002259
Transistor	Reverb Pre-Driver & Tremolo Osc.	Q10, 28	991-002356
Transistor	Reverb Amp & Mixer Amp	Q12, 13	991-011705
Transistor	Reverb and Tremolo Driver	Q11, 29	991-010462
Transistor	Isolation and Main Preamp	Q9, 14	991-008393

PARTS LIST

PART	DESCRIPTION	SCHEMATIC REFERENCE	PART NUMBER
Capacitor	Mylar .0022 UF 50V		946-002155-222
Capacitor	Mylar .012 UF 50V		946-002155-123
Transistor	Voltage Amp No. 1 (Treble)	Q22	991-011705
Transistor	Voltage Amp No. 2 (Bass & Treble)	Q16, 23	991-008393
Transistor	Voltage Amp No. 1 (Bass)	Q15	991-010461

FRONT PANEL ASSEMBLY

Jack	Phone (3T)		910-010455-4
Jack	Phone (2T)		910-010878-2
Jack	Phone (5T)		910-010457-2
Knob	Control		915-010880-1
Knob	On-Off Switch		915-010880
Light	Pilot		939-010879
Panel	Front Light		963-010874

MAIN CHASSIS ASSEMBLY

Assembly	Reverb Unit		984-003365
Capacitor	Ceramic .01 UF 500V		947-002631-103
Capacitor	Electrolytic 3000 UF 50V		945-010057
Capacitor	Electrolytic 2000 UF 50V		945-010465
Capacitor	Electrolytic 35 UF 25V NP		945-008895-50
Capacitor	Mylar .01 UF 400V		946-003003-103
Cord	Power		989-008717-3
Diode		D5, 6	919-004799
Diode	Rectifier	D1-4	919-010459
Fuse	2 Amp Slo-Blo		939-013304
Holder	Fuse		906-006303
Insulator	Power Transistor		908-008882
Jack	Phone (4T)		910-010464
Jack	Phone (3T)		910-010455
Potentiometer	60 Ohm (Bias Adjust)	VR14-17	925-008863-3
Resistor	.33 Ohm 5W		924-008896-2
Resistor	WW 340 Ohm 10W		924-006811-67
Resistor	WW 750 Ohm 10W		924-006811-66
Resistor	1K 7W		924-008896-8
Switch	On-Off		960-010636
Transformer	Driver Bass TF 1005D	T2	955-010426
Transformer	Driver Treble TF 1006D	T3	955-002254-4
Transformer	Power TF 114P	T1	954-010431
Transistor	Driver	Q17, 24	992-008890

PARTS INFORMATION

STANDARD PARTS

Replacements for all standard electronic parts and hardware may be purchased directly from local suppliers generally in less time than would be required to obtain them from the factory.

SPECIAL PARTS

In addition to the standard replacement parts, special electronic and mechanical parts are also used. These parts are manufactured by and to the specifications of the factory. Order these parts directly from the factory since they would be difficult or impossible to obtain from other sources.

PARTS ORDERING INFORMATION

When ordering parts be sure to include the following information:

1. Model and Serial Number
2. Part Number
3. A description of the part
4. Specify how you want the part shipped.

Most special electronic parts and mechanical parts will have a part number stamped on them. In the event that the part number is missing, or you are unable to read the part number, a complete description of the part and where it is used will allow the factory to fill your parts order. When parts are ordered in the proper manner the factory is able to fill your orders promptly—delays that might result are avoided.

IMPORTANT
IN ANY CORRESPONDENCE CONCERNING THIS INSTRUMENT ALWAYS INCLUDE MODEL AND SERIAL NUMBERS

GIBSON GTR600
AMPLIFIER BIAS ADJUSTMENT

The amplifier bias adjustments are carefully set at the factory. Adjustment should only be required when output transistors or their associated components are replaced. Since the GTR600 consists of two amplifiers (one for bass and one for treble), there are two separate bias adjustments consisting of two potentiometers each. Because each amplifier is independent from the other, adjust only the bias on the amplifier requiring service. All bias adjustments should be made with the speakers connected and no signal applied. Three meters are required to properly adjust amplifer bias. Meters similar in quality and sensitivity to the Simpson Model 260 should be used. Use the following instructions and meter readings to adjust **either** the **bass** or **treble** amplifier bias:

With AC power off.

1. Connect one VOM meter (set at its highest current range—500 milliamps minimum) in series with the positive 40 volts supplied to the amplifier output circuit. This point is the junction of transistor collectors Q18 and Q19 and one end of the 1K 7 watt resistor on the Bass Amplifier. On the Treble Amplifier the point would be the junction of transistor collector Q25 and one end of the 1K 7 watt resistor. Observe proper meter polarity.

2. Connect a second VOM meter (set at its highest current range—500 milliamps minimum) in series with the negative 40 volts supplied to the amplifier output circuit. This point is the junction of the .33, 47 and 33 ohm resistors, as well as bias adjustment VR15 on the Bass Amplifier. On the Treble Amplifier the point would be the junction of the .33 and 33 ohm resistors, as well as bias adjustment VR17. Again observe proper meter polarity.

3. Connect a third VOM meter (set at its positive 10 volt DC range) from the amplifier output to ground. In the treble amplifier, make certain that the meter is connected ahead of the electrolytic output capacitor.

4. Using a Phillips screwdriver, rotate the two bias potentiometers of the amplifier to be adjusted, back and forth several times to clean. Then set each potentiometer to its approximate midpoint.

With AC power on.

5. While observing all three meters, adjust the bias potentiometers (without going far from their mid-point setting) for the following readings:

   A. The two current meters should read the identical current and this current is to be between 70 to 90 milliamps.

   B. The third meter (voltage) should read as close to possible to ϕ volts; this is most important when adjusting the bass amplifier.

   C. Adjust the range of all three meters to their lowest usable current and voltage settings for the most accurate readings.

AMPLIFIER CHASSIS
(Top View)

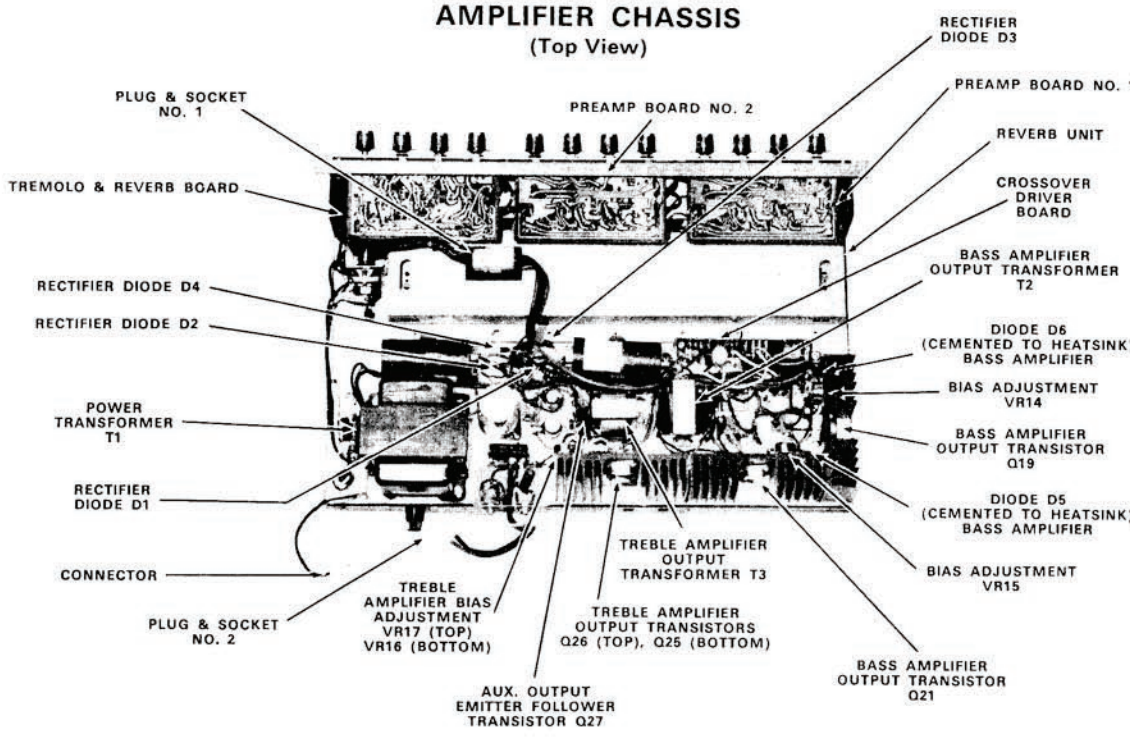

CROSS-OVER DRIVER BOARD

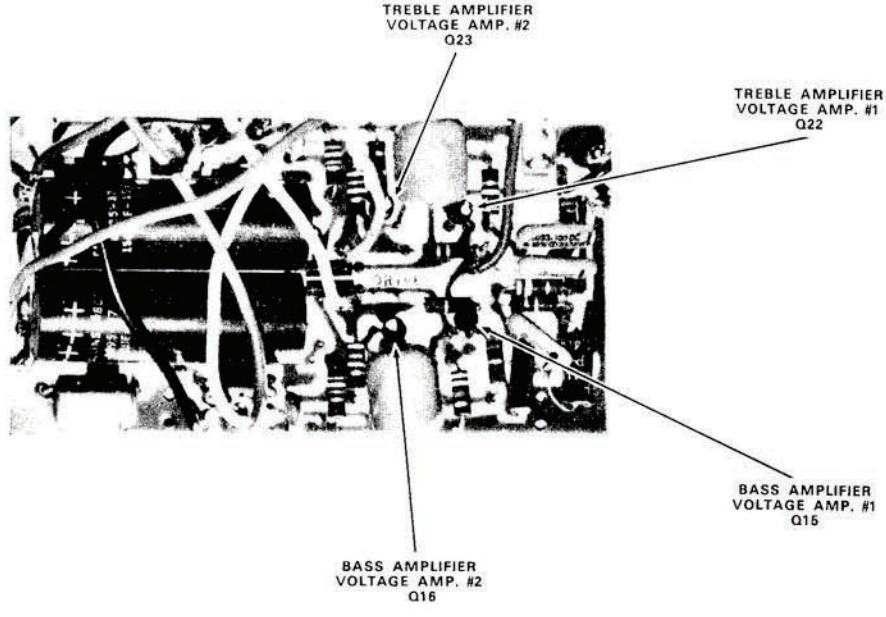

CONTROL PANEL ASSEMBLY

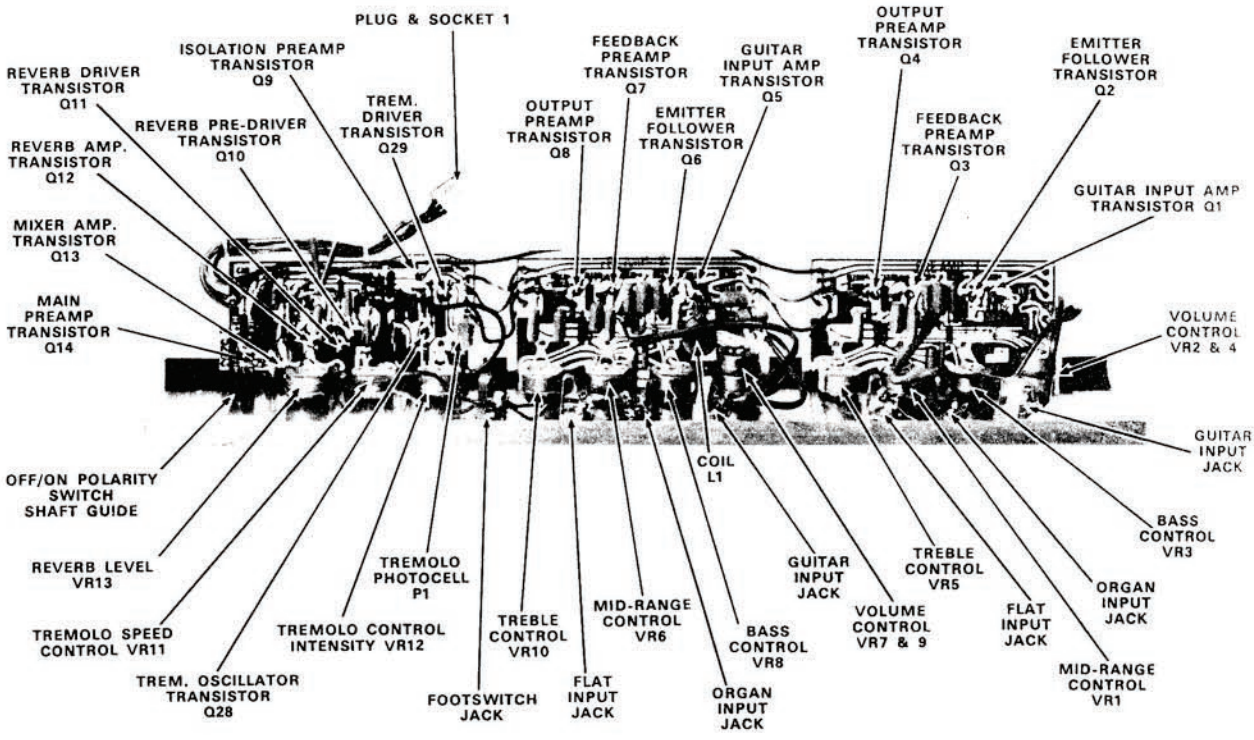

AMPLIFIER CHASSIS

(Bottom View)

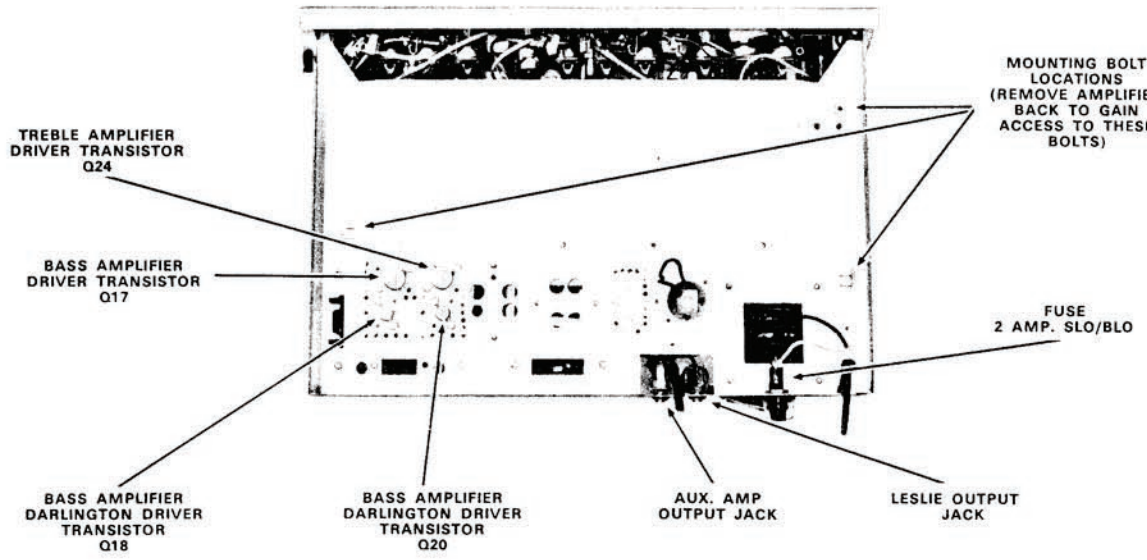

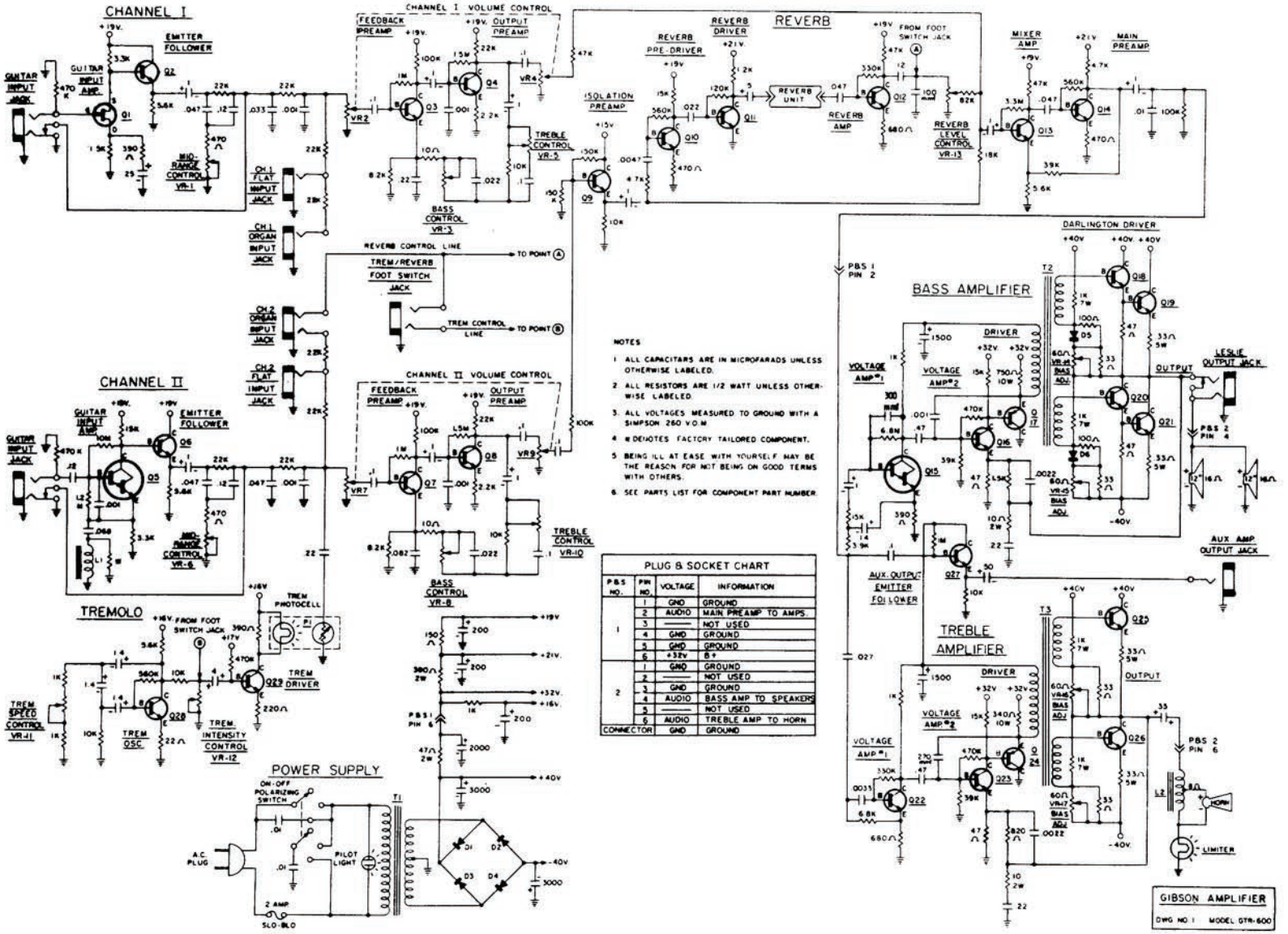
CHANNEL I
CHANNEL I VOLUME CONTROL
REVERB
REVERB CONTROL LINE
TREM/REVERB FOOT SWITCH JACK
CHANNEL II
CHANNEL II VOLUME CONTROL
TREMOLO
POWER SUPPLY
BASS AMPLIFIER
TREBLE AMPLIFIER
DARLINGTON DRIVER
NOTES
1. ALL CAPACITARS ARE IN MICROFARADS UNLESS OTHERWISE LABELED.
2. ALL RESISTORS ARE 1/2 WATT UNLESS OTHERWISE LABELED.
3. ALL VOLTAGES MEASURED TO GROUND WITH A SIMPSON 260 V.O.M.
4. # DENOTES FACTORY TAILORED COMPONENT.
5. BEING ILL AT EASE WITH YOURSELF MAY BE THE REASON FOR NOT BEING ON GOOD TERMS WITH OTHERS.
6. SEE PARTS LIST FOR COMPONENT PART NUMBER.
PLUG & SOCKET CHART
P.B.S NO. | PIN NO. | VOLTAGE | INFORMATION
1 | 1 | GND | GROUND
2 | AUDIO | MAIN PREAMP TO AMPS.
3 | —— | NOT USED
4 | GND | GROUND
5 | GND | GROUND
6 | +32v | B+
2 | 1 | GND | GROUND
2 | —— | NOT USED
3 | GND | GROUND
4 | AUDIO | BASS AMP TO SPEAKERS
5 | —— | NOT USED
6 | AUDIO | TREBLE AMP TO HORN
CONNECTOR | GND | GROUND
GIBSON AMPLIFIER
DWG NO. 1 MODEL GTR-600

GIBSON AMPLIFIER
MODEL LP 1 & 2



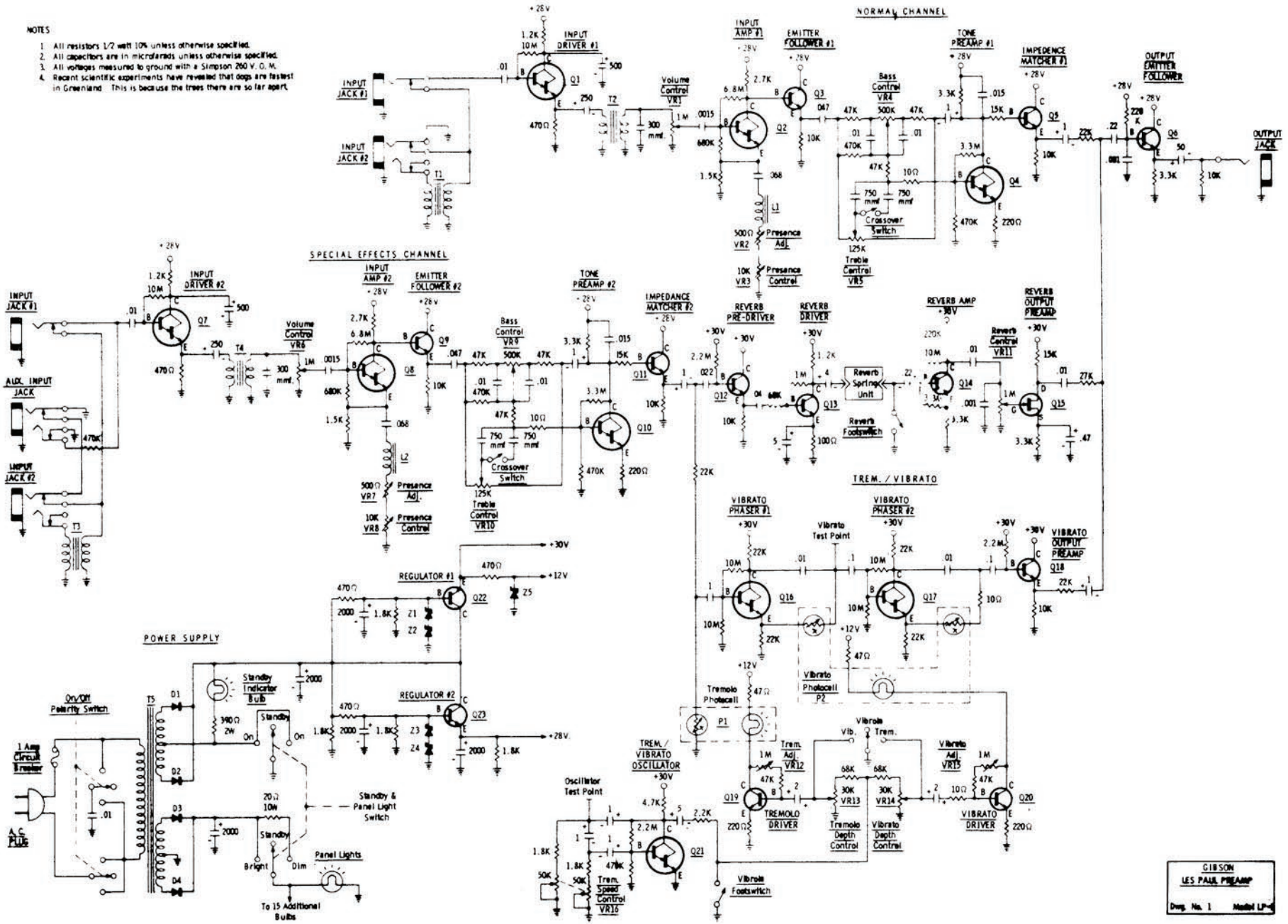
NOTES
1. All resistors 1/2 watt 10% unless otherwise specified.
2. All capacitors are in microfarads unless otherwise specified.
3. All voltages measured to ground with a Simpson 260 V. O. M.
4. Recent scientific experiments have revealed that dogs are fastest in Greenland. This is because the trees there are so far apart.
NORMAL CHANNEL
SPECIAL EFFECTS CHANNEL
TREM. / VIBRATO
POWER SUPPLY
INPUT JACK #1
INPUT JACK #2
AUX. INPUT JACK
INPUT DRIVER #1
INPUT DRIVER #2
INPUT AMP #1
INPUT AMP #2
EMITTER FOLLOWER #1
EMITTER FOLLOWER #2
Volume Control VR1
Volume Control VR6
Bass Control VR4
Bass Control VR9
TONE PREAMP #1
TONE PREAMP #2
IMPEDENCE MATCHER #1
IMPEDANCE MATCHER #2
OUTPUT EMITTER FOLLOWER
OUTPUT JACK
Presence Adj. VR2
Presence Control VR3
Presence Adj. VR7
Presence Control VR8
Treble Control VR5
Treble Control VR10
Crossover Switch
REVERB PRE-DRIVER
REVERB DRIVER
REVERB AMP
REVERB OUTPUT PREAMP
Reverb Spring Unit
Reverb Footswitch
Reverb Control VR11
VIBRATO PHASER #1
VIBRATO PHASER #2
Vibrato Test Point
VIBRATO OUTPUT PREAMP
Vibrato Photocell P2
Tremolo Photocell P1
TREM. / VIBRATO OSCILLATOR
Oscillator Test Point
TREMOLO DRIVER
VIBRATO DRIVER
Trem. Adj. VR12
Vibrato Adj. VR15
Tremolo Depth Control VR13
Vibrato Depth Control VR14
Trem. Speed Control VR16
Vibrato Footswitch
REGULATOR #1
REGULATOR #2
On/Off Polarity Switch
1 Amp Circuit Breaker
AC Plug
Standby Indicator Bulb
Standby
Standby & Panel Light Switch
Panel Lights
Bright
Dim
To 15 Additional Bulbs
GIBSON
LES PAUL PREAMP
Dwg. No. 1
Model LP-4

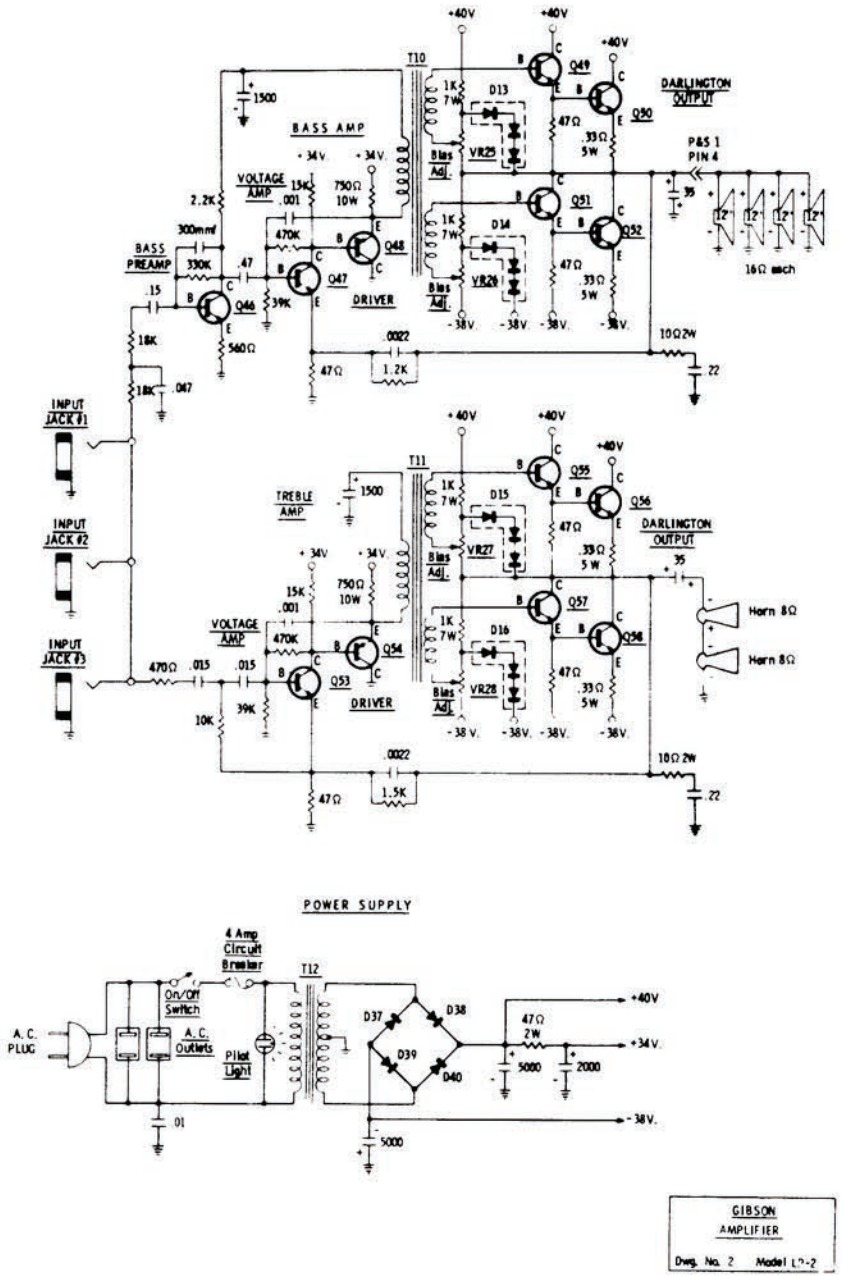

GIBSON
AMPLIFIER
Dwg. No. 2 Model L?-2

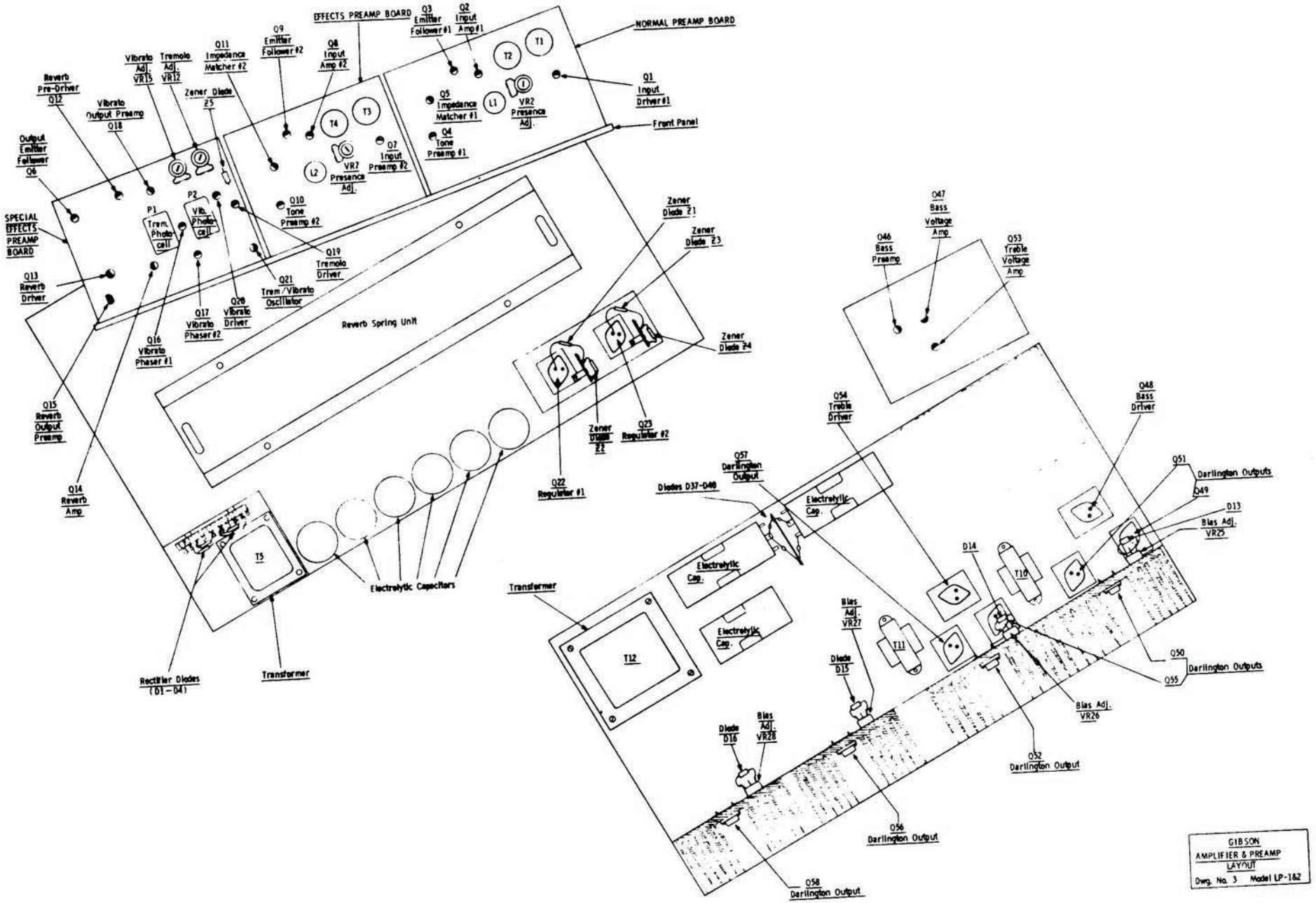

GIBSON
AMPLIFIER & PREAMP
LAYOUT
Dwg. No. 3 Model LP-1&2

GIBSON LP-2

AMPLIFIER BIAS ADJUSTMENT

The amplifier bias adjustments are carefully set at the factory. Adjustment should only be required when output transistors of their associated components are replaced. Since the LP2 consists of two amplifiers (one for bass and one for treble), there are two separate bias adjustments consisting of two potentiometers each. Because each amplifier is independent from the other, adjust only the bias on the amplifier requiring service. All bias adjustments should be made with the speakers connected and no signal applied. Three meters are required to properly adjust amplifier bias. Meters similar in quality and sensitivity to the Simpson Model 260 should be used. Use the following instructions and meter readings to adjust either the bass or treble amplifier bias:

WITH AC POWER OFF.

1. Connect one VOM meter (set at its highest current range - 500 milliamps minimum) in series with the positive 40 volts supplied to the amplifier output circuit. This point is the junction of transistor collectors Q49 and Q50. On the Treble Amplifier, the point would be the junction of transistor collector Q55 and Q56. Observe proper meter polarity.

2. Connect a second VOM meter (set at its highest current range - 500 milliamps minimum) in series with the negative 38 volts supplied to the amplifier output circuit. This point is the junction of the .33 and 47 ohm resistors and Diode D14, as well as bias adjustment VR26 on the Bass Amplifier. On the Treble Amplifier the point would be the junction of the .33 and 47 ohm resistors and Diode D16, as well as bias adjustment VR28. Again observe proper meter polarity.

3. Connect a third VOM meter (set at its positive 10 volt DC range) from the amplifier output to ground. In the treble amplifier, make certain that the meter is connected ahead of the electrolytic output capacitor.

4. Using a Phillips screwdriver, rotate the two bias potentiometers of the amplifier to be adjusted back and forth several times to clean. Then set each potentiometer to its approximate midpoint.

WITH AC POWER ON.

5. While observing all three meters, adjust the bias potentiometers (without going far from their mid-point setting) for the following readings:

A. The two current meters should read the identical current and this current is to be between 70 to 90 milliamps.

B. The third meter (voltage) should read as close as possible to Ø volts; this is most important when adjusting the bass amplifier.

C. Adjust the range of all three meters to their lowest usable current and voltage settings for the most accurate readings.

D. Secure Bias Adjustment Potentiometers with Service Cement or Glyptol.

PARTS INFORMATION

STANDARD PARTS

Replacements for all standard electronic parts and hardware can be purchased directly from local suppliers generally in less time than would be required to obtain them from the factory.

SPECIAL PARTS

In addition to the standard replacement parts, special electronic and mechanical parts are also used. These are manufactured by and to the specifications of the factory. Order such parts directly from the factory since they would be difficult or impossible to obtain from other sources.

PARTS ORDERING

When ordering parts be sure to include the following information:

1. Model and Serial Number
2. Part Number
3. A description of the part
4. Shipping instructions

Most special electronic and mechanical parts will have a part number stamped on them. In the event this is missing, or you are unable to read it, a complete description of the part and where it is used will allow the factory to fill your order. When parts are ordered in the proper manner, the factory is able to fill your orders promptly - delays that might result are avoided.

ADDRESS PARTS ORDERS TO
C.M.I. SERVICE DEPT.
7301 North Cicero
Chicago, Illinois 60646

IMPORTANT

In any correspondence concerning this instrument

ALWAYS INCLUDE MODEL AND SERIAL NUMBERS.

PARTS LIST

LES PAUL 1 & 2

PART	DESCRIPTION	SCHEMATIC REFERENCE	PART NUMBER
Assembly	Reverb Spring Unit		984-003365
Assembly	Front Panel		997-013933
Assembly	Normal Pre Amp Board		996-013936
Assembly	Effects Pre Amp Board		996-013937
Assembly	Special Effects Board		996-013938
Assembly	Footswitch		997-013939
Assembly	Driver Board		996-013951
Bulb	Limiter		939-012678
Bulb	Panel		939-013564
Bulb	Panel Switch (GE327)		939-015585
Capacitor	Electrolytic 50 UF 20 V		945-008895-12
Capacitor	Electrolytic 2 UF 20 V N.P.		945-008895-32
Capacitor	Electrolytic 1500 UF 15 V		945-008895-37
Capacitor	Electrolytic 1 UF 20 V		945-008895-38
Capacitor	Electrolytic 5 UF 15 V		945-008895-43
Capacitor	Electrolytic 35 UF 35 V N.P.		945-008895-48
Capacitor	Electrolytic 35 UF 60 V N.P.		945-008895-53
Capacitor	Electrolytic 2000 UF 50 V		945-010465-1
Capacitor	Electrolytic 5000 UF 50 V		945-013547
Capacitor	Electrolytic 500 UF 15 V		945-013557
Capacitor	Electrolytic 250 UF 12 V		945-013558
Capacitor	Electrolytic 5 UF 25 V		945-013559
Capacitor	Tantalum .22 UF 35 V		946-012624-224
Capacitor	Tantalum .47 UF 35 V		946-012624-474
Capacitor	Tantalum 1 UF 35 V		946-013560
Chassis	Amp. & Power Supply		997-013944
Circuit Breaker	1 Amp		939-013561-1
Circuit Breaker	4 Amp		939-013561-2
Coil	27 Mh	L1,2	952-003308
Cord	Power		989-008717-3
Diode	Zener 12 V	Z5	919-003309-2
Diode	Zener 16 V	Z1-4	919-003309-3
Diode	Triple	D13-16	919-010454-1
Diode	Rectifier	D1-4, 37-40	919-010459
Inlay	Mylar Front Panel Artwork		913-015067
Insulator	Power Transistor		908-008882
Jack	Input #1-3 (LP2)		910-010878
Jack	Input #1 (LP1)		910-013519
Jack	Input #2 & Aux. (LP1)		910-013519-1
Jack	Output (LP1)		910-013556-1
Knob	Polarity Switch		915-003835
Knob	All except Polarity Switch Knob		915-013575
Outlet	A.C.		906-007235
Panel	Front, Clear Plastic		922-013555
Photocell	Tremolo	P1	948-013545
Photocell	Vibrato	P2	948-013545-1
Plug	Footswitch		910-013549-1

PARTS LIST

LES PAUL 1 & 2

PART	DESCRIPTION	SCHEMATIC REFERENCE	PART NUMBER
Potentiometer	500 Ohms "L" Taper	VR2,7	925-003306-4
Potentiometer	1 Meg "L" Taper	VR12,15	925-003306-5
Potentiometer	100 Ohms Bias Adjust	VR25-28	925-008863-4
Potentiometer	1 Meg "L" Taper	VR1,6,11	925-010435-8
Potentiometer	10 K CCW "A" Taper	VR3,8	925-010435-9
Potentiometer	500K "L" Taper	VR4,9	925-010435-10
Potentiometer	125K "L" Taper	VR5,10	925-010435-11
Potentiometer	30 K "BD" Taper	VR13,14	925-010435-12
Potentiometer	50 K CCW "A" Taper	VR16	925-010435-13
Resistor	W.W. 750 Ohms 10% 10 Watt		924-006811-66
Resistor	W.W. 20 Ohms 5% 10 Watt		924-006811-73
Resistor	W.W. .33 Ohms 10% 5 Watt		924-008896-2
Resistor	W.W. 1 K 10% 7 Watt		924-008896-8
Resistor	W.W. 10 Ohms 10% 2 Watt		924-010471-100
Resistor	W.W. 390 Ohms 10% 2 Watt		924-010471-391
Resistor	W.W. 47 Ohms 10% 2 Watt		924-010471-470
Resistor	W.W. 470 Ohms 10% 2 Watt		924-010471-471
Socket	Limiter W/Mtg. Bracket		906-012857
Socket	Footswitch		910-013548-1
Speaker	12"		985-009961-3
Speaker	Horn 8 Ohms		985-015003-1
Switch	Reverb & Vibrola Footswitch S.P.S.T.		960-003574
Switch	On/Off Polarity		960-012430
Switch	Vibrola (Blue, Green, Orange)		960-013522
Switch	Crossover (Blue, Orange)		960-013522-1
Switch	Standby (Red, Green, Red)		960-013522-2
Switch	On/Off (LP2)		960-013562-1
Transistor	Power Regulator #1 & 2	Q22,23	992-003139
Transistor	Power	Q49,51,55,57.	992-004091
Transistor	Power	Q50,52,56,58.	992-004092
Transistor		Q19,20	991-008393
Transistor	Power	Q48,54	992-008890
Transistor	F.E.T.	Q15	991-011706
Transistor	Darlington (2N3508)	Q1,2,4,7,8, 10,16,17,21..	991-013543
Transistor	Low Noise (2N5249A)	Q3,5,6,9,11, 12,13,14,18, 46,47,53	991-013544
Transformer	Driver	T10,11	955-010426
Transformer	Power	T12	954-013529
Transformer	Audio	T1,3	955-013546
Transformer	Audio	T2,4	955-013546-1
Transformer	Power	T5	954-013551

This parts list includes all standard stock replacement parts. No attempt has been made to include every nut, bolt and screw. If the necessity for a non-listed part arises, please write describing the part's location and function as well as model and serial number of the unit.

GIBSON AMPLIFIER

MODEL Falcon III



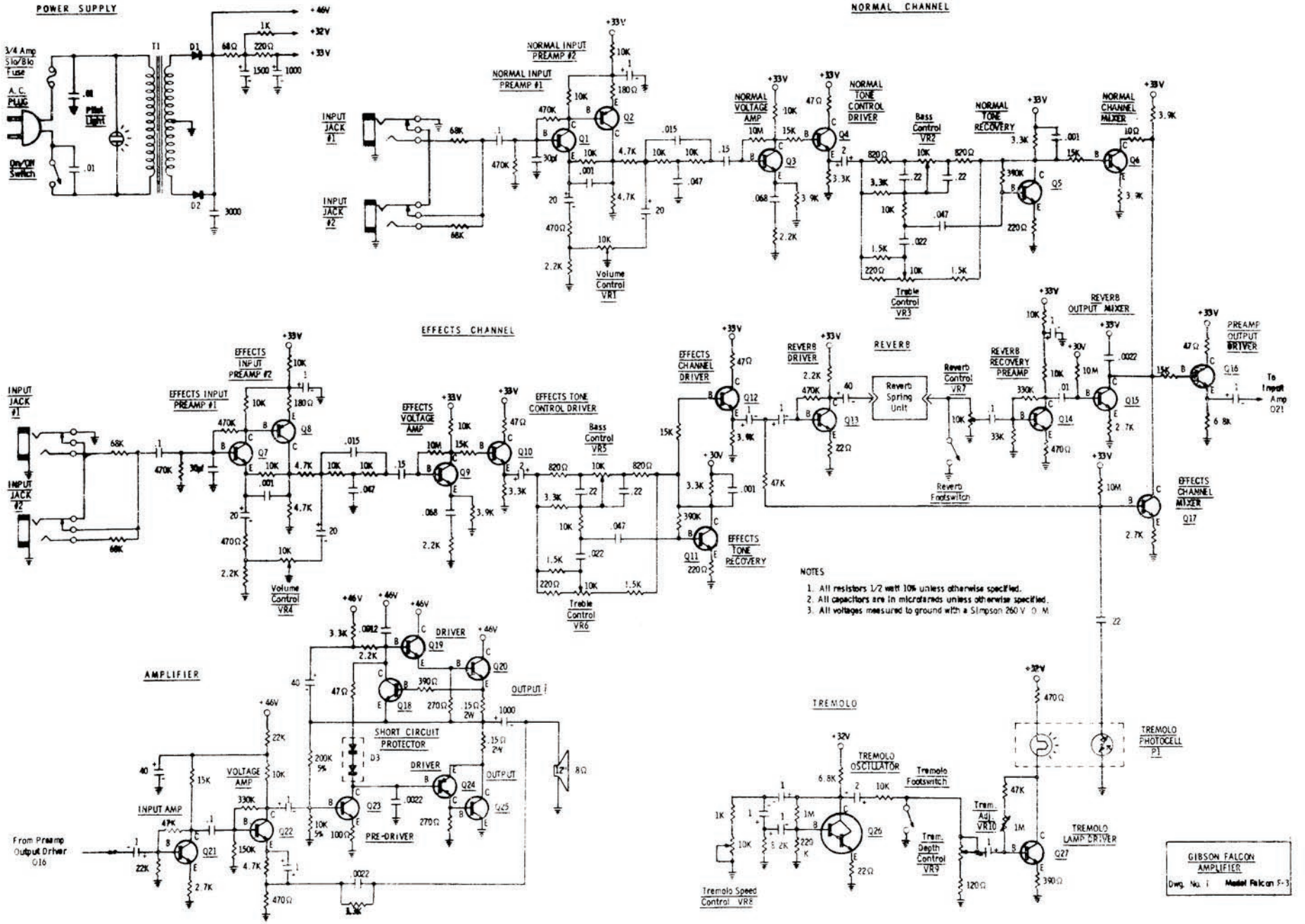
POWER SUPPLY
NORMAL CHANNEL
EFFECTS CHANNEL
AMPLIFIER
TREMOLO
NOTES
1. All resistors 1/2 watt 10% unless otherwise specified.
2. All capacitors are in microfarads unless otherwise specified.
3. All voltages measured to ground with a Simpson 260 V. O. M.
GIBSON FALCON AMPLIFIER
Dwg. No. 1 Model Falcon F-3

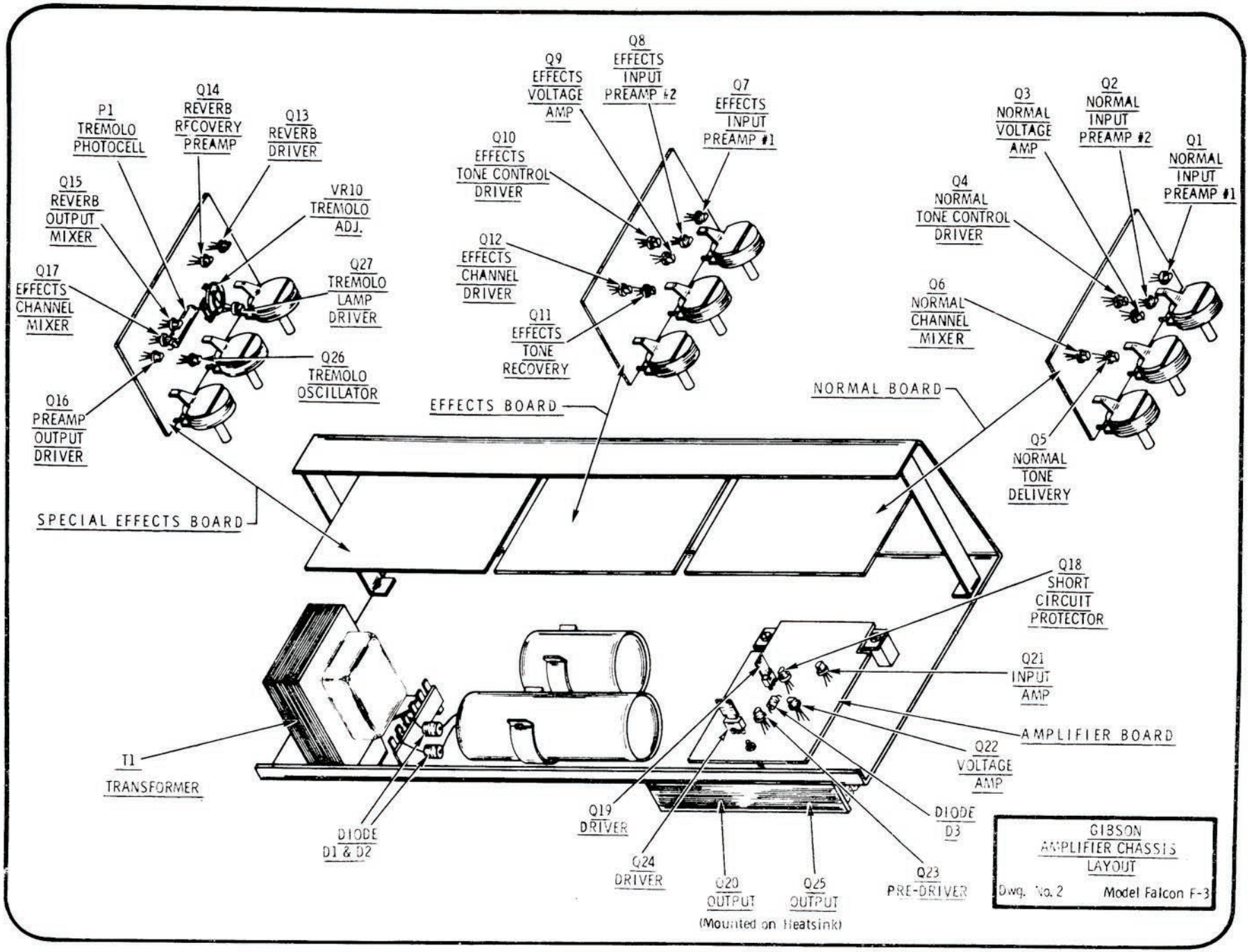
Q8
EFFECTS
INPUT
PREAMP #2
Q9
EFFECTS
VOLTAGE
AMP
Q7
EFFECTS
INPUT
PREAMP #1
Q10
EFFECTS
TONE CONTROL
DRIVER
Q12
EFFECTS
CHANNEL
DRIVER
Q11
EFFECTS
TONE
RECOVERY
P1
TREMOLO
PHOTOCELL
Q14
REVERB
RECOVERY
PREAMP
Q13
REVERB
DRIVER
Q15
REVERB
OUTPUT
MIXER
VR10
TREMOLO
ADJ.
Q17
EFFECTS
CHANNEL
MIXER
Q27
TREMOLO
LAMP
DRIVER
Q26
TREMOLO
OSCILLATOR
Q16
PREAMP
OUTPUT
DRIVER
EFFECTS BOARD
SPECIAL EFFECTS BOARD
Q3
NORMAL
VOLTAGE
AMP
Q2
NORMAL
INPUT
PREAMP #2
Q1
NORMAL
INPUT
PREAMP #1
Q4
NORMAL
TONE CONTROL
DRIVER
Q6
NORMAL
CHANNEL
MIXER
NORMAL BOARD
Q5
NORMAL
TONE
DELIVERY
Q18
SHORT
CIRCUIT
PROTECTOR
Q21
INPUT
AMP
AMPLIFIER BOARD
Q22
VOLTAGE
AMP
T1
TRANSFORMER
DIODE
D1 & D2
Q19
DRIVER
Q24
DRIVER
Q20
OUTPUT
(Mounted on Heatsink)
Q25
OUTPUT
Q23
PRE-DRIVER
DIODE
D3
GIBSON
AMPLIFIER CHASSIS
LAYOUT
Dwg. No. 2
Model Falcon F-3

PARTS INFORMATION

STANDARD PARTS

Replacements for all standard electronic parts and hardware can be purchased directly from local suppliers generally in less time than would be required to obtain them from the factory.

SPECIAL PARTS

In addition to the standard replacement parts, special electronic and mechanical parts are also used. These are manufactured by and to the specifications of the factory. Order such parts directly from the factory since they would be difficult or impossible to obtain from other sources.

PARTS ORDERING

When ordering parts be sure to include the following information:

1. Model and Serial Number
2. Part Number
3. A description of the part
4. Shipping instructions

Most special electronic and mechanical parts will have a part number stamped on them. In the event this is missing, or you are unable to read it, a complete description of the part and where it is used will allow the factory to fill your order. When parts are ordered in the proper manner, the factory is able to fill your orders promptly - delays that might result are avoided.

ADDRESS PARTS ORDERS TO
C.M.I. SERVICE DEPT.
7301 North Cicero
Chicago, Illinois 60646

IMPORTANT

In any correspondence concerning this instrument

ALWAYS INCLUDE MODEL AND SERIAL NUMBERS.

PARTS LIST

FALCON

PART	DESCRIPTION	SCHEMATIC REFERENCE	PART NUMBER
Assembly	Amp Module Board		996-015836
Assembly	Effects Preamp Board		996-015838
Assembly	Normal Preamp Board		996-015837
Assembly	Special Effects Preamp Board		996-015839
Assembly	Reverb Spring Unit		984-003365
Assembly	Reverb Tremolo Footswitch		997-012447
Capacitor	Electrolytic 1000 UF 40V		945-003861-1
Capacitor	Electrolytic 1 UF 20V		945-008895-11
Capacitor	Electrolytic 1 UF 35V		945-008895-15
Capacitor	Electrolytic 4 UF 20V		945-008895-23
Capacitor	Electrolytic 2 UF 20V		945-008895-32
Capacitor	Electrolytic 40 UF 25V		945-015086
Capacitor	Electrolytic 3000 UF 80V		945-015382
Capacitor	Electrolytic 20 UF 25V		945-015384
Capacitor	Electrolytic 1500 UF @ 50V, 1000 @ 30V		945-015386
Capacitor	Tantalum 1 UF 35V		946-013560
Circuit Breaker	.75 Amp		939-013304-11
Cord	Power		989-008717-2
Diode	Rectifier	D1, 2	919-010459
Diode	Dual	D3	919-010454
Holder	Fuse		906-006303
Insulator	Transistor (Miea)		908-002346
Jack	Phone		910-010455
Jack	Phone		910-010457
Knob			915-015392
Light	Pilot		939-010460
Photocell	Tremolo	P1	948-012416
Potentiometer	10K	VR1-9	925-010435-20
Potentiometer	1 Meg (Tremolo ADJ)	VR10	925-003306-5
Resistor	WW .15 ohm 2W		924-015325-2
Socket	Transistor		906-013174
Speaker	12"		985-015379
Switch	On/Off		960-015387
Transformer	Power	T1	954-015385
Transistor	Output	Q20,Q25	992-003139
Transistor	Driver	Q24	991-015062
Transistor	Driver	Q19	991-015063
Transistor	Short Ckt. Protector, Trem Lamp Driver	Q18,Q27	991-010462
Transistor	Effect & Normal Input Preamp #2	Q2, Q8	991-013599
Transistor	Tremolo Oscillator	Q26	991-013543
Transistor	All Others	Q1,3-7,9-17,21-23	991-013544

GIBSON AMPLIFIER
MODEL 212



993-016486

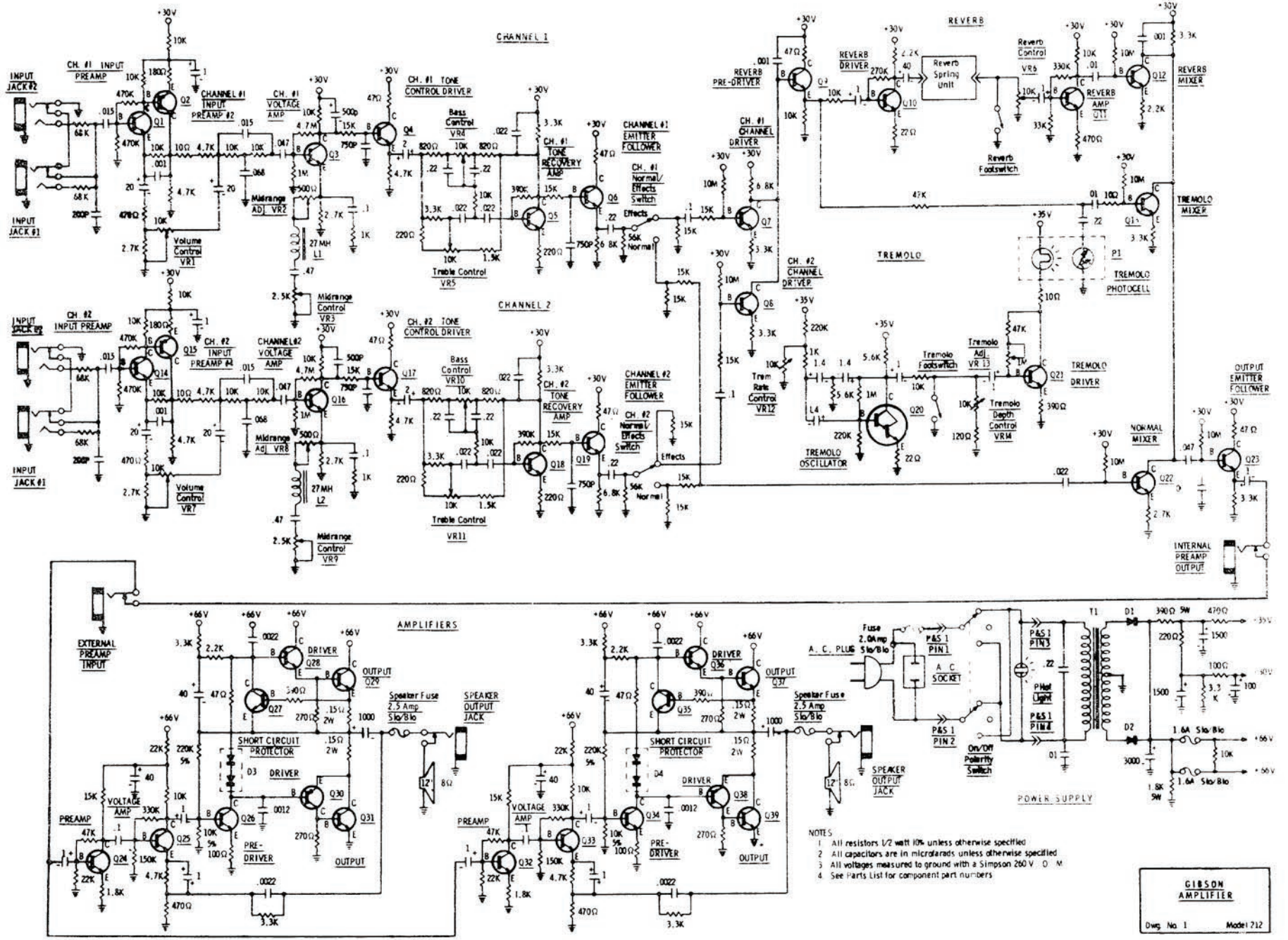
CHANNEL 1
CHANNEL 2
REVERB
TREMOLO
AMPLIFIERS
POWER SUPPLY
INPUT JACK #2
INPUT JACK #1
CH. #1 INPUT PREAMP
CH. #2 INPUT PREAMP
CHANNEL #1 INPUT PREAMP #2
CHANNEL #2 INPUT PREAMP #4
CH. #1 VOLTAGE AMP
CHANNEL #2 VOLTAGE AMP
CH. #1 TONE CONTROL DRIVER
CH. #2 TONE CONTROL DRIVER
CH. #1 TONE RECOVERY AMP
CH. #2 TONE RECOVERY AMP
CHANNEL #1 EMITTER FOLLOWER
CHANNEL #2 EMITTER FOLLOWER
CH. #1 Normal/Effects Switch
CH. #2 Normal/Effects Switch
CH. #1 CHANNEL DRIVER
CH. #2 CHANNEL DRIVER
REVERB PRE-DRIVER
REVERB DRIVER
Reverb Spring Unit
Reverb Control VR6
REVERB AMP Q11
REVERB MIXER
Reverb Footswitch
TREMOLO MIXER
TREMOLO PHOTOCELL
TREMOLO DRIVER
TREMOLO OSCILLATOR
Tremolo Footswitch
Tremolo Adj. VR 13
Tremolo Depth Control VR14
Trem Rate Control VR12
NORMAL MIXER
OUTPUT EMITTER FOLLOWER
INTERNAL PREAMP OUTPUT
Volume Control VR1
Volume Control VR7
Midrange Adj. VR2
Midrange Adj. VR8
Midrange Control VR3
Midrange Control VR9
Bass Control VR4
Bass Control VR10
Treble Control VR5
Treble Control VR11
Effects
Normal
EXTERNAL PREAMP INPUT
SHORT CIRCUIT PROTECTOR
Speaker Fuse 2.5 Amp Slo/Blo
SPEAKER OUTPUT JACK
PREAMP
VOLTAGE AMP
PRE-DRIVER
DRIVER
OUTPUT
A. C. PLUG
Fuse 2.0Amp Slo/Blo
A. C. SOCKET
P&S 1 PIN 1
P&S 1 PIN 2
P&S 1 PIN 3
P&S 1 PIN 4
Pilot Light
On/Off Polarity Switch
T1
D1
D2
+35V
+30V
+66V
NOTES
1 All resistors 1/2 watt 10% unless otherwise specified
2 All capacitors are in microfarads unless otherwise specified
3 All voltages measured to ground with a Simpson 260 V. O. M.
4 See Parts List for component part numbers
GIBSON AMPLIFIER
Dwg. No. 1
Model 212

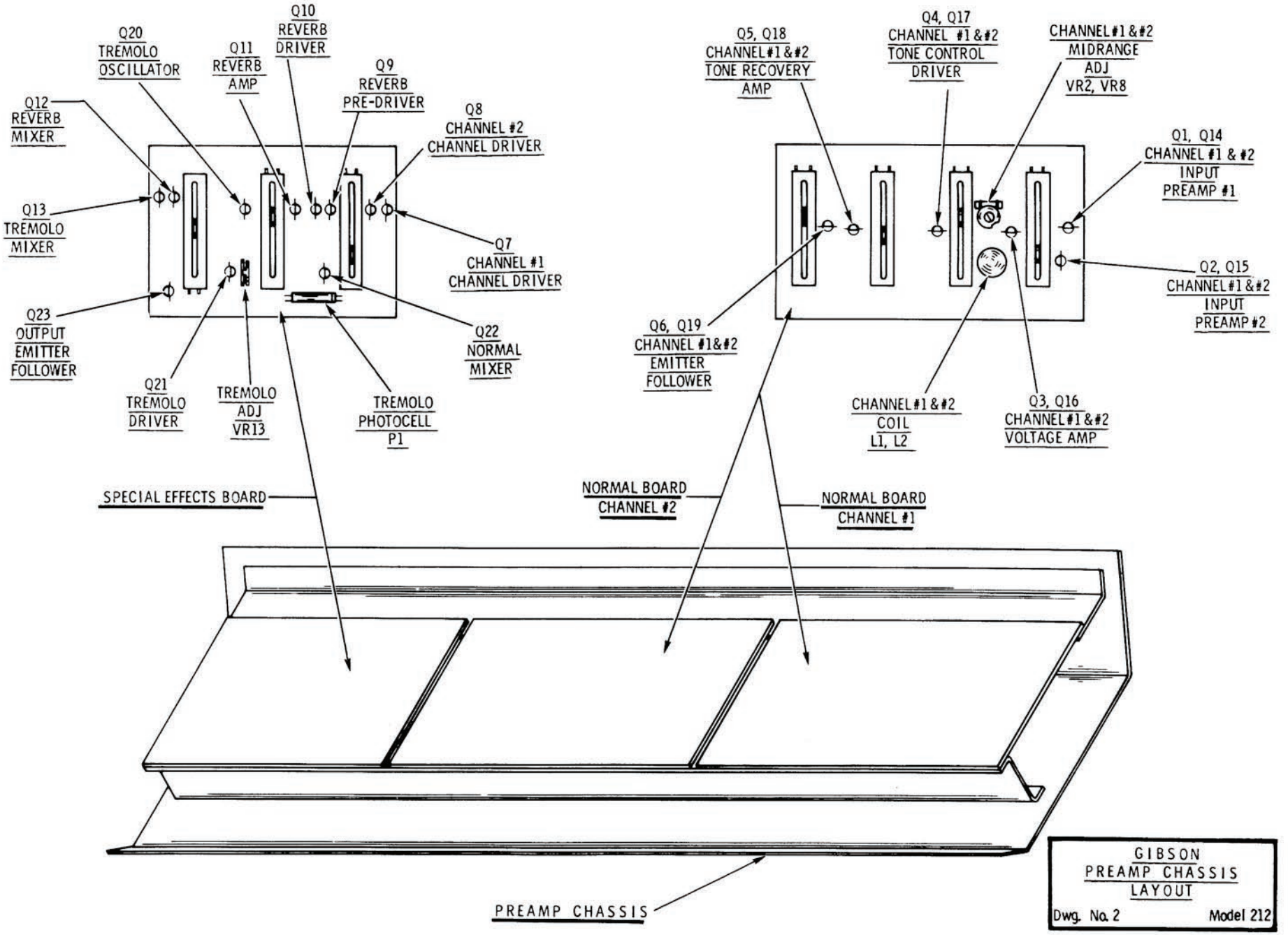
Q20
TREMOLO
OSCILLATOR
Q11
REVERB
AMP
Q10
REVERB
DRIVER
Q9
REVERB
PRE-DRIVER
Q8
CHANNEL #2
CHANNEL DRIVER
Q12
REVERB
MIXER
Q13
TREMOLO
MIXER
Q7
CHANNEL #1
CHANNEL DRIVER
Q23
OUTPUT
EMITTER
FOLLOWER
Q22
NORMAL
MIXER
Q21
TREMOLO
DRIVER
TREMOLO
ADJ
VR13
TREMOLO
PHOTOCELL
P1
Q5, Q18
CHANNEL#1&#2
TONE RECOVERY
AMP
Q4, Q17
CHANNEL #1&#2
TONE CONTROL
DRIVER
CHANNEL#1&#2
MIDRANGE
ADJ
VR2, VR8
Q1, Q14
CHANNEL #1 & #2
INPUT
PREAMP #1
Q2, Q15
CHANNEL#1&#2
INPUT
PREAMP#2
Q6, Q19
CHANNEL #1&#2
EMITTER
FOLLOWER
CHANNEL#1&#2
COIL
L1, L2
Q3, Q16
CHANNEL#1&#2
VOLTAGE AMP
SPECIAL EFFECTS BOARD
NORMAL BOARD
CHANNEL #2
NORMAL BOARD
CHANNEL #1
PREAMP CHASSIS
GIBSON
PREAMP CHASSIS
LAYOUT
Dwg. No. 2
Model 212

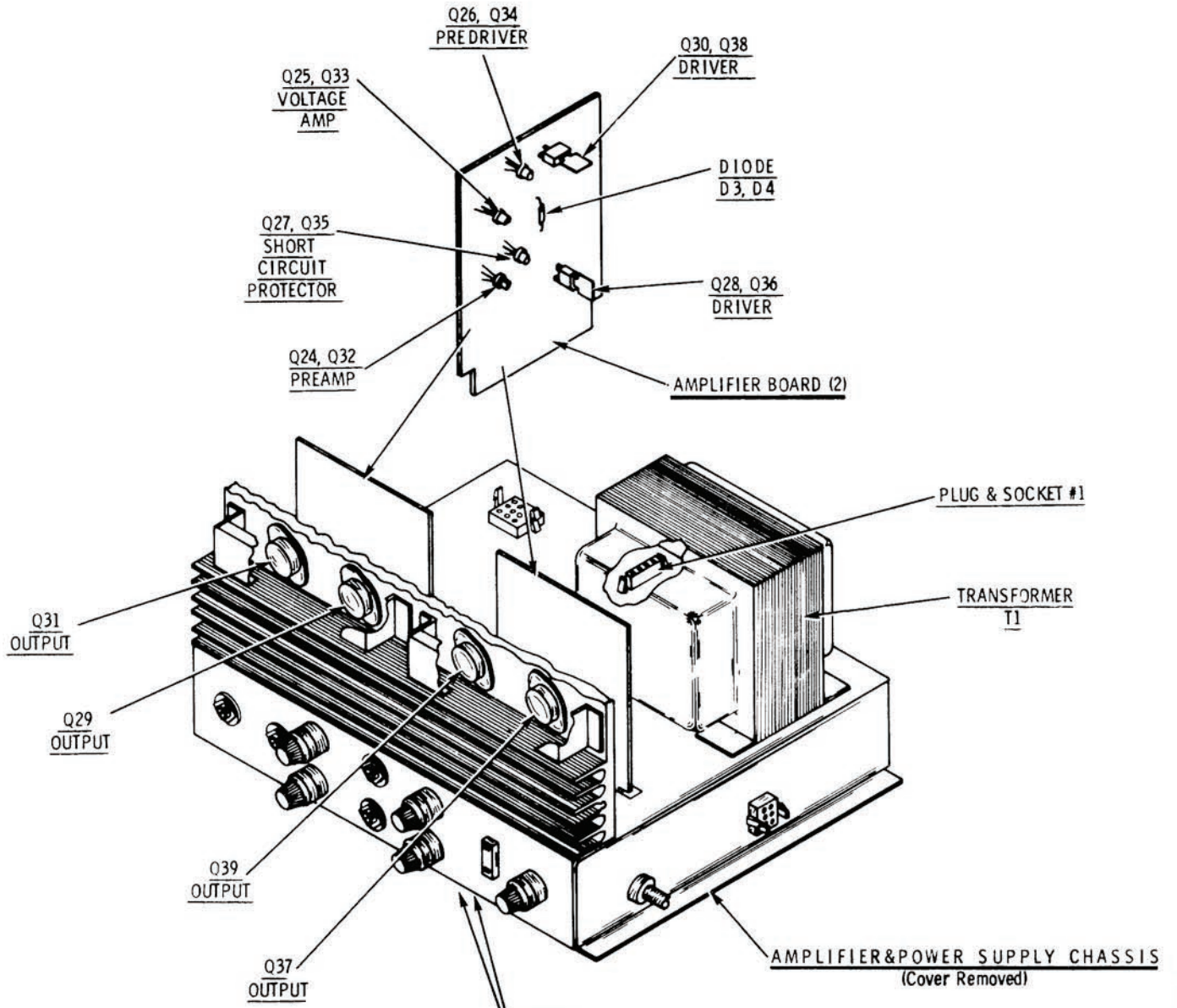

GIBSON
AMPLIFIER & POWER
SUPPLY CHASSIS LAYOUT

Dwg. No. 3 Model 212

PARTS INFORMATION

STANDARD PARTS

Replacements for all standard electronic parts and hardware can be purchased directly from local suppliers generally in less time than would be required to obtain them from the factory.

SPECIAL PARTS

In addition to the standard replacement parts, special electronic and mechanical parts are also used. These are manufactured by and to the specifications of the factory. Order such parts directly from the factory since they would be difficult or impossible to obtain from other sources.

PARTS ORDERING

When ordering parts be sure to include the following information:

1. Model and Serial Number
2. Part Number
3. A description of the part
4. Shipping instructions

Most special electronic and mechanical parts will have a part number stamped on them. In the event this is missing, or you are unable to read it, a complete description of the part and where it is used will allow the factory to fill your order. When parts are ordered in the proper manner, the factory is able to fill your orders promptly - delays that might result are avoided.

ADDRESS PARTS ORDERS TO
C.M.I. SERVICE DEPT.
7301 North Cicero
Chicago, Illinois 60646

IMPORTANT

In any correspondence concerning this instrument

ALWAYS INCLUDE MODEL AND SERIAL NUMBERS.

PARTS LIST

Part	Description	Schematic Reference	Part Number
Assembly	Reverb Spring Unit		984-003365
Assembly	Reverb & Tremolo Footswitch		997-012447
Assembly	Normal Preamp Board #1		996-016014
Assembly	Normal Preamp Board #2		996-016015
Assembly	Special Effects Preamp Board		996-016016
Assembly	Power Supply		997-016009
Button			915-010840
Capacitor	Electrolytic 1 UF 20V		945-008895-11
Capacitor	Electrolytic 1 UF 25V		945-008895-38
Capacitor	Electrolytic 1 UF 35V		945-008895-15
Capacitor	Electrolytic 1.4 UF 15V		945-008895-4
Capacitor	Electrolytic 2 UF 20V		945-008895-32
Capacitor	Electrolytic 20 UF 25V		945-015384
Capacitor	Electrolytic 40 UF 25V		945-015086
Capacitor	Electrolytic 100 UF 40V		945-008895-46
Capacitor	Electrolytic 1000 UF 40V		945-003861-1
Capacitor	Electrolytic Dual 1500 UF 75V & 60V		945-003193-1
Capacitor	Electrolytic 3000 UF 80V		945-015382
Capacitor	Tantalum .1 UF 35V		946-012624-104
Coil	27 MH	L1,2	952-015363-1
Cord	Power		989-008717-2
Diode		D1,2	919-010459
Diode	Dual	D3,4	919-010454
Fuse	Slo/Blo 2.5 Amp		939-013304-5
Fuse	Slo/Blo 1.6 Amp		939-013304-9
Holder	Fuse		906-006303
Insert	Tab Volume (Blue)		915-015635-1
Insert	Tab Bass (Blue)		915-015635-2
Indert	Tab Treble (Blue)		915-015635-3
Insert	Tab Midrange (Blue)		915-015635-4
Insert	Tab Reverb (Green)		915-015635-5
Insert	Tab Depth (Green)		915-015635-6
Insert	Tab Rate (Green)		915-015635-7
Insert	Tab Volume (Red)		915-015635-8
Insert	Tab Bass (Red)		915-015635-9
Insert	Tab Treble (Red)		915-015635-10
Insert	Tab Midrange (Red)		915-015635-11
Insulator	Power		908-002346
Jack	Phone		910-010078-1
Jack	Phone		910-010455
Jack	Phone Input #1-#4		910-010457
Light	Pilot (Amber)		939-015667-4
Photocell	Tremolo	P1	948-012416
Potentiometer	20K (Wired in Parallel)	VR1,4-7,10-14	925-015652-1
Potentiometer	5K (Wired in Parrallel)	VR3,9	925-015652-2
Potentiometer	500 Ohm Midrange Adj.	VR2,8	925-003306-4
Potentiometer	1M Tremolo Adj.	VR13	925-004349-4

Part	Description	Schematic Reference	Part Number
Resistor	WW 220 Ohm 2W.....	.....	924-010471-221
Resistor	WW1800 Ohm 5W.....	.....	924-008896-28
Resistor	WW 390 Ohm 5W.....	.....	924-008896-19
Resistor	WW .15 Ohm 2W.....	.....	924-015325-2
Socket	AC.....	.....	906-007235
Socket	Transistor.....	.....	906-010453
Speaker	12" 8 Ohms.....	.....	985-015646
Switch	D.P.D.T. (Red).....	.....	906-015685
Switch	S.P.D.T. (Green).....	.....	960-015684
Transistor	Input Preamps.....	Q2,15.....	991-013599
Transistor	Short Ckt Protectors, Rev & Trem Drvs	Q10,21,27,35	991-010462
Transistor	Tremolo Oscillator.....	Q20.....	991-013543
Transistor	Output	Q29,31,37,39	992-003139
Transistor	Driver PNP.....	Q30,38.....	991-015062
Transistor	Driver NPN.....	Q28,36.....	991-015063
Transistor	All Others.....	Q1,3-9,11-14, 16-19,22-26, 32-34	991-013544
Transformer	Power	T1.....	954-015636

GIBSON AMPLIFIER
MODEL 800G/ 800-8



993-016419

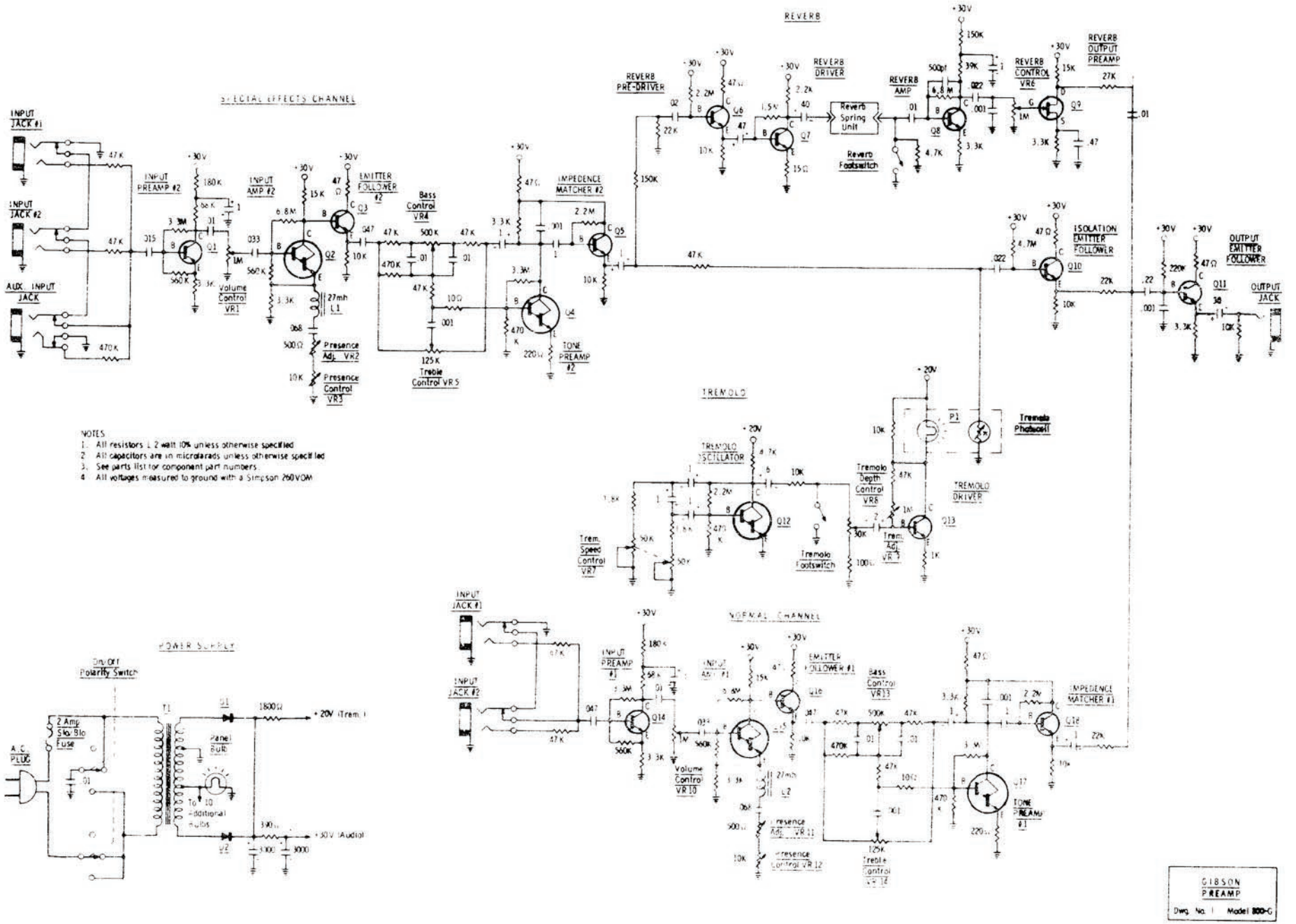
SPECIAL EFFECTS CHANNEL
INPUT JACK #1
INPUT JACK #2
AUX. INPUT JACK
INPUT PREAMP #2
INPUT AMP #2
EMITTER FOLLOWER #2
Volume Control VR1
Presence Adj. VR2
Presence Control VR3
Bass Control VR4
Treble Control VR5
IMPEDENCE MATCHER #2
TONE PREAMP #2
REVERB
REVERB PRE-DRIVER
REVERB DRIVER
Reverb Spring Unit
Reverb Footswitch
REVERB AMP
REVERB CONTROL VR6
REVERB OUTPUT PREAMP
ISOLATION EMITTER FOLLOWER
OUTPUT EMITTER FOLLOWER
OUTPUT JACK
TREMOLO
TREMOLO OSCILLATOR
Trem. Speed Control VR7
Tremolo Footswitch
Tremolo Depth Control VR8
Trem. Adj. VR9
TREMOLO DRIVER
Tremolo Photocell
NORMAL CHANNEL
INPUT PREAMP #1
INPUT AMP #1
EMITTER FOLLOWER #1
Volume Control VR10
Presence Adj. VR11
Presence Control VR12
Bass Control VR13
Treble Control VR14
IMPEDENCE MATCHER #1
TONE PREAMP #1
POWER SUPPLY
On/Off Polarity Switch
2 Amp Slo Blo Fuse
A.C. PLUG
Panel Bulb
To 10 additional bulbs
+20V (Trem.)
+30V (Audio)
NOTES
1. All resistors ± 2 watt 10% unless otherwise specified
2. All capacitors are in microfarads unless otherwise specified
3. See parts list for component part numbers.
4. All voltages measured to ground with a Simpson 260VOM
GIBSON PREAMP
Dwg. No. | Model 800-G

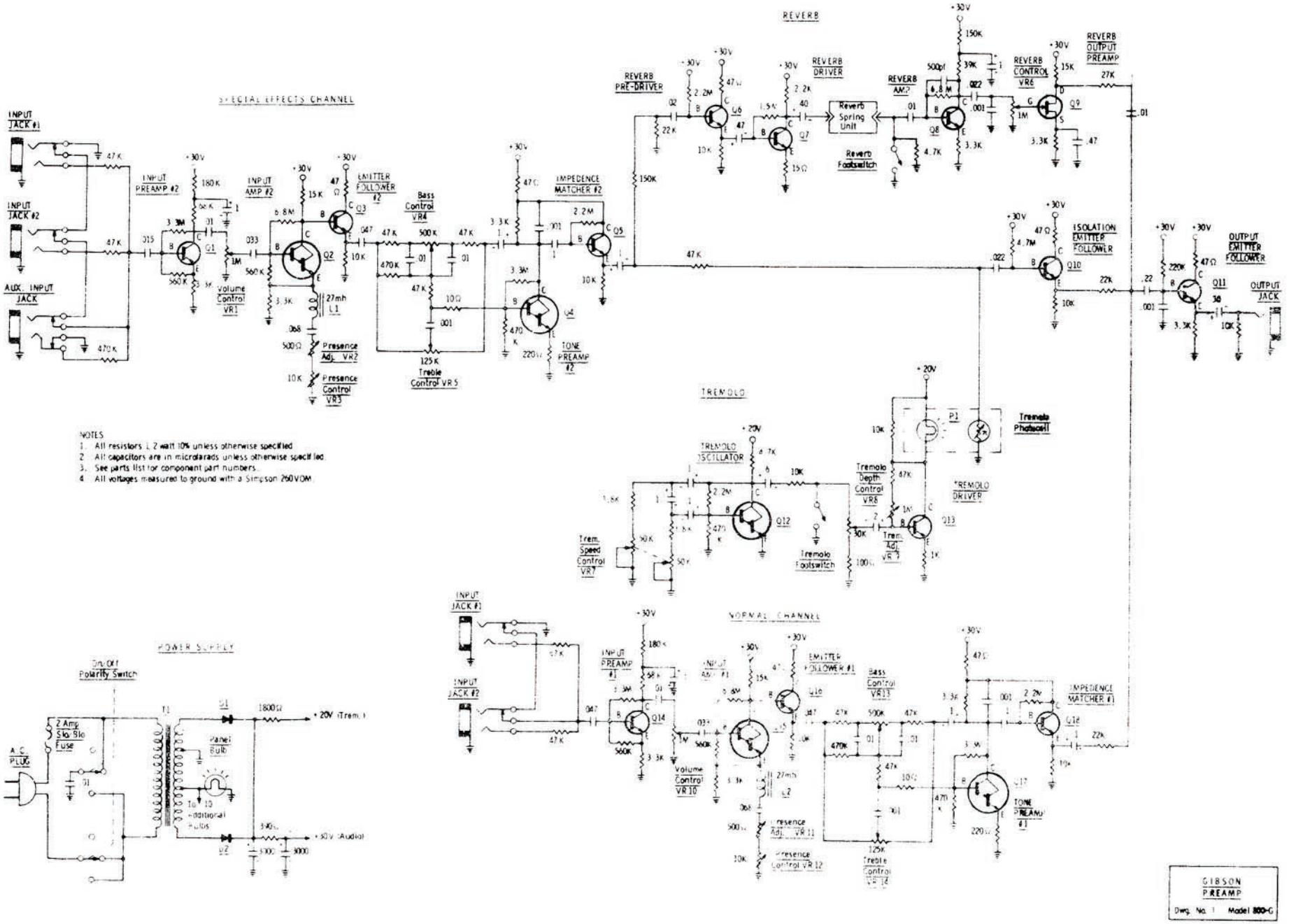

NOTES
1. All resistors 1/2 watt 10% unless otherwise specified.
2. All capacitors are in microfarads unless otherwise specified.
3. See parts list for component part numbers.
4. All voltages measured to ground with a Simpson 260 VOM.

GIBSON PREAMP
Dwg. No. 1 Model 800-G

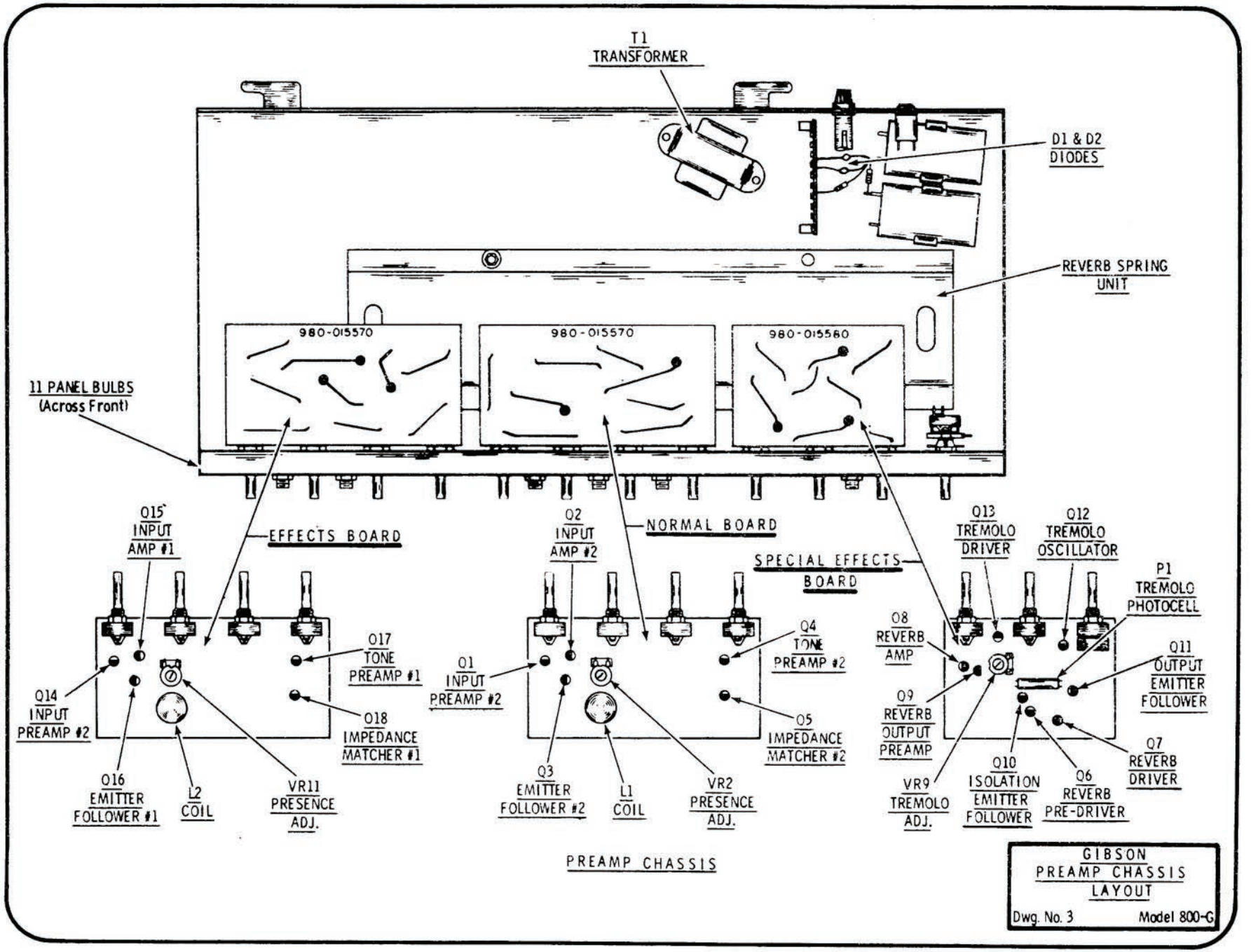
T1
TRANSFORMER
D1 & D2
DIODES
REVERB SPRING
UNIT
980-015570
980-015570
980-015560
11 PANEL BULBS
(Across Front)
EFFECTS BOARD
NORMAL BOARD
SPECIAL EFFECTS
BOARD
Q15
INPUT
AMP #1
Q2
INPUT
AMP #2
Q13
TREMOLO
DRIVER
Q12
TREMOLO
OSCILLATOR
P1
TREMOLO
PHOTOCELL
Q17
TONE
PREAMP #1
Q4
TONE
PREAMP #2
Q8
REVERB
AMP
Q11
OUTPUT
EMITTER
FOLLOWER
Q14
INPUT
PREAMP #2
Q1
INPUT
PREAMP #2
Q9
REVERB
OUTPUT
PREAMP
Q18
IMPEDANCE
MATCHER #1
Q5
IMPEDANCE
MATCHER #2
Q7
REVERB
DRIVER
Q16
EMITTER
FOLLOWER #1
L2
COIL
VR11
PRESENCE
ADJ.
Q3
EMITTER
FOLLOWER #2
L1
COIL
VR2
PRESENCE
ADJ.
VR9
TREMOLO
ADJ.
Q10
ISOLATION
EMITTER
FOLLOWER
Q6
REVERB
PRE-DRIVER
PREAMP CHASSIS
GIBSON
PREAMP CHASSIS
LAYOUT
Dwg. No. 3
Model 800-G

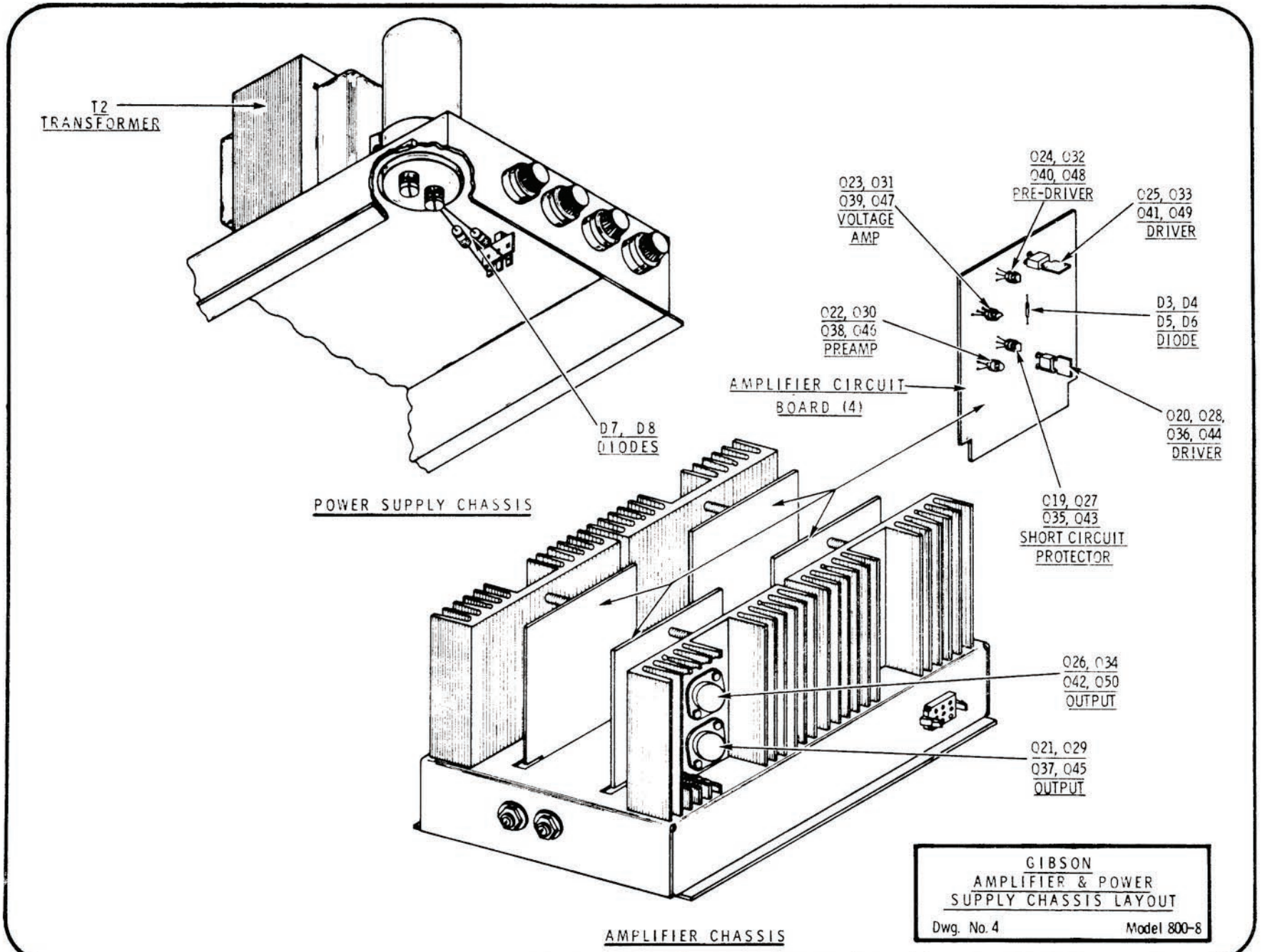
T2
TRANSFORMER
D7, D8
DIODES
POWER SUPPLY CHASSIS
024, 032
040, 048
PRE-DRIVER
023, 031
039, 047
VOLTAGE
AMP
025, 033
041, 049
DRIVER
D3, D4
D5, D6
DIODE
022, 030
038, 046
PREAMP
AMPLIFIER CIRCUIT
BOARD (4)
020, 028,
036, 044
DRIVER
019, 027
035, 043
SHORT CIRCUIT
PROTECTOR
026, 034
042, 050
OUTPUT
021, 029
037, 045
OUTPUT
AMPLIFIER CHASSIS
GIBSON
AMPLIFIER & POWER
SUPPLY CHASSIS LAYOUT
Dwg. No. 4
Model 800-8

PARTS INFORMATION

STANDARD PARTS

Replacements for all standard electronic parts and hardware can be purchased directly from local suppliers generally in less time than would be required to obtain them from the factory.

SPECIAL PARTS

In addition to the standard replacement parts, special electronic and mechanical parts are also used. These are manufactured by and to the specifications of the factory. Order such parts directly from the factory since they would be difficult or impossible to obtain from other sources.

PARTS ORDERING

When ordering parts be sure to include the following information:

1. Model and Serial Number
2. Part Number
3. A description of the part
4. Shipping instructions

Most special electronic and mechanical parts will have a part number stamped on them. In the event this is missing, or you are unable to read it, a complete description of the part and where it is used will allow the factory to fill your order. When parts are ordered in the proper manner, the factory is able to fill your orders promptly - delays that might result are avoided.

ADDRESS PARTS ORDERS TO
C.M.I. SERVICE DEPT.
7301 North Cicero
Chicago, Illinois 60646

IMPORTANT

In any correspondence concerning this instrument

ALWAYS INCLUDE MODEL AND SERIAL NUMBERS.

PARTS LIST

Part	Description	Schematic Reference	Part Number
Assembly	Amplifier Board		996-015814
Assembly	Effects Preamp Board		996-015824
Assembly	Footswitch Complete		997-012447
Assembly	Normal Preamp Board		996-015823
Assembly	Power Supply		997-015805
Assembly	Reverb Spring Unit		984-003365
Assembly	Special Effects Board		996-015825
Capacitor	Electrolytic 1 UF 20V		945-008895-11
Capacitor	Electrolytic 1 UF 25V		945-008895-38
Capacitor	Electrolytic 2 UF 20V		945-008895-32
Capacitor	Electrolytic 6 UF 20V		945-008895-7
Capacitor	Electrolytic 40 UF 25V		945-015086
Capacitor	Electrolytic 50 UF 20V		945-008895-12
Capacitor	Electrolytic 3000 UF 40V		945-010473
Capacitor	Electrolytic 6000 Mfd 75V		945-015345
Capacitor	Tantalum 1 UF 35V		946-013560-1
Capacitor	Tantalum .47 UF 35V		946-012624-474
Coil	27 MH	L1,2	952-015363-1
Cord	Power (800-G)		989-008717-3
Cord	Power - Detachable (800-8)		989-013895
Diode	Rectifier	D1,2	919-010623
Diode	Dual	D3-6	919-010454
Diode	Rectifier	D7,8	919-010459
Fuse	2 Amp Slo/Blo		939-013304
Fuse	3 Amp Slo/Blo		939-013304-1
Holder	Fuse 2A Slo/Blo		906-008121
Holder	Fuse 1.5A Slo/Blo		906-006303
Insulator	Transistor		908-002346
Jack	Input (800-G)		910-013556-1
Jack	Phone (112B)Output		910-013556-2
Jack	Phone (114B)Input		910-013556-3
Jack	Phone (Amp Input #1 & #2) (800-8)		910-010878
Knob			915-013575-1
Light	Pilot		939-015344
Light	Panel		939-013564
Panel	Front, Clear Plastic		922-015346
Photocell	Tremolo	P1	948-001859
Plug	Footswitch Stereo Phone		910-012679
Potentiomer	500 Ohm Presence Adj.	VR2,11	925-003306-4
Potentiometer	10K Presence Control	VR3,12	925-010435-15
Potentiometer	30K Tremolo Depth Control	VR8	925-010435-18
Potentiometer	50K Tremolo Speed Control	VR7	925-010435-19
Potentiometer	125K Treble Control	VR5,14	925-010435-17
Potentiometer	500K Bass Control	VR4,13	925-010435-16
Potentiometer	1M Tremolo Adj.	VR9	925-003306-5
Potentiometer	1M Volume, Reverb Control	VR1,6,10	925-010435-14
Resistor	WW 3000 Ohm 7W		924-008896

Socket	Transistor	.....	906-010453
Socket	A. C.	.....	906-007235
Speaker	12"	.....	985-015314
Switch	On/Off (800-G)	.....	960-010636-2
Switch	Footswitch S.P.D.T.	.....	960-012474
Switch	Footswitch S.P.S.T.	.....	960-003575
Switch	On/Off (800-8)	.....	960-015357
Transistor	Output	Q21,26,29,34,37, 42,45,50.....	992-003139
Transistor	Short Circuit Protector,Trem. Driver	Q13,19,27,35,43.	991-010462
Transistor	Reverb Output Preamp	Q9.....	991-011706
Transistor	Input Amp #1 & #2, Tone Preamp #1 & #2, Tremolo Oscillator (800-G)	Q2,4,12,15,17...	991-013543
Transistor	Driver PNP (800-8)	Q25,33,41,49....	991-015062
Transistor	Driver NPN (800-8)	Q20,28,36,44....	991-015063
Transistor	All Others	Q1,3,5-11,14,16, 18,22-24,30-32, 38-40,46-48.....	991-013544
Transformer	Power (800-G)	T1.....	954-015362
Transformer	Power (800-8)	T2.....	954-015347

GIBSON AMPLIFIER
MODEL 800-B,2B,2G &5



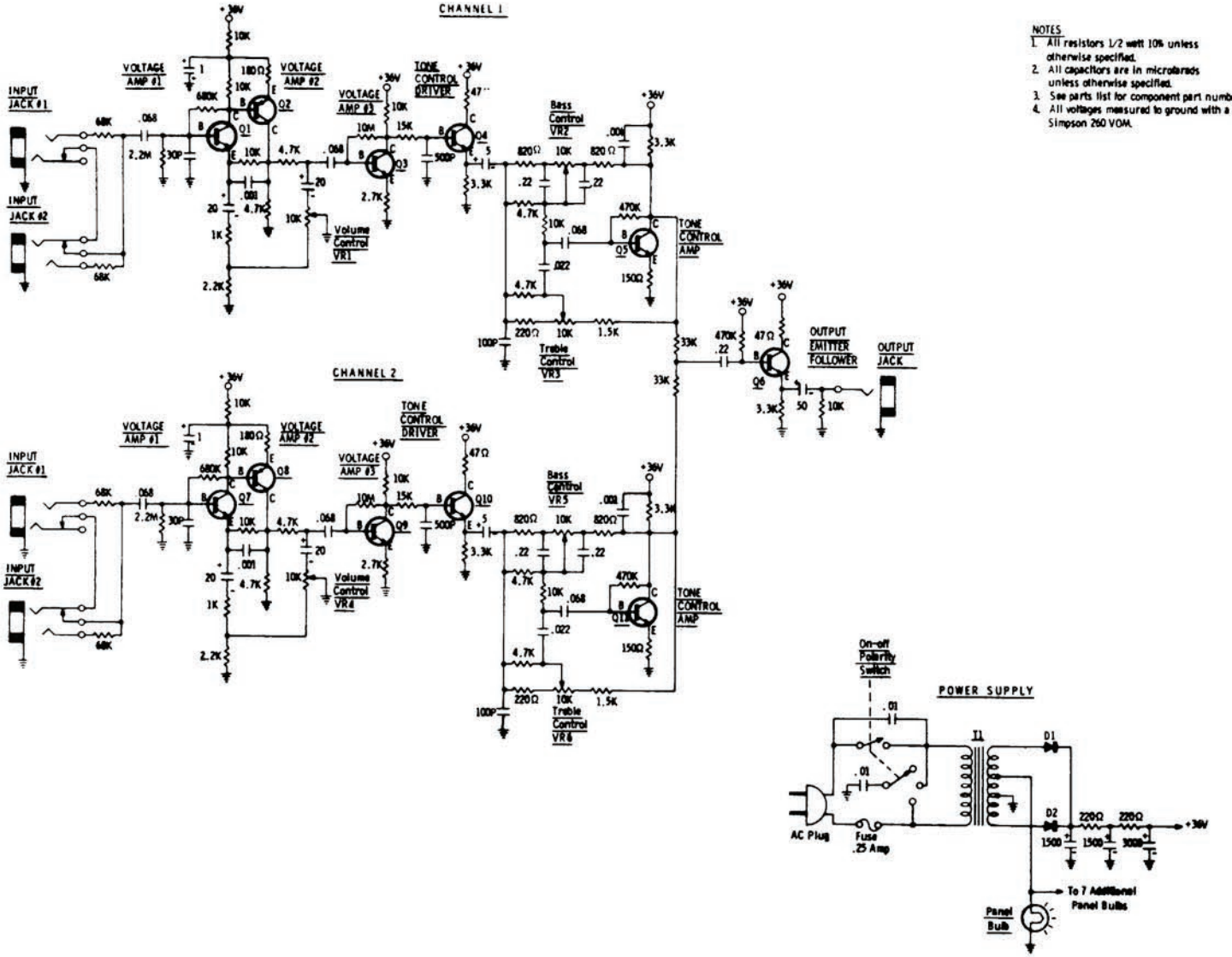

NOTES

1. All resistors 1/2 watt 10% unless otherwise specified.
2. All capacitors are in microfarads unless otherwise specified.
3. See parts list for component part numbers.
4. All voltages measured to ground with a Simpson 260 VOM.

GIBSON PREAMP

Dwg. No. 1 Model 800-B

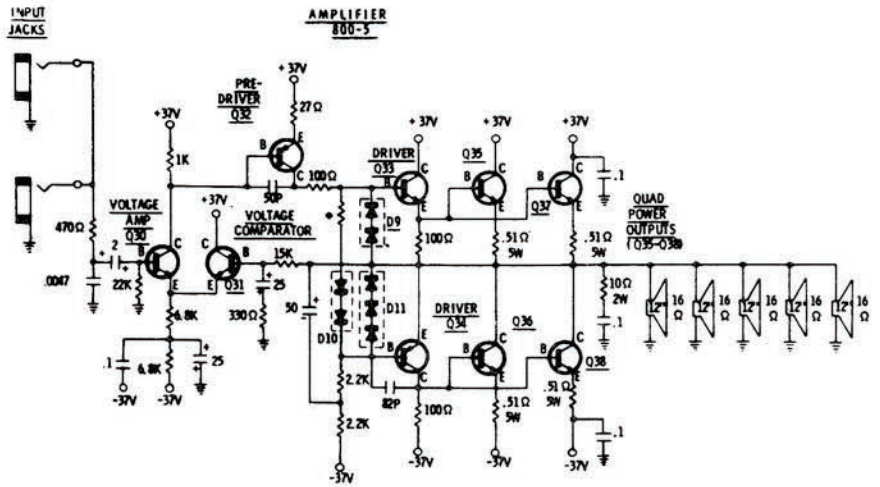

NOTES
1. All resistors are 1/2 watt 10% unless otherwise specified.
2. All capacitors are in microfarads unless otherwise specified.
3. All voltages measured to ground with a Simpson 260 VOM.
4. See Parts List for component part numbers.
5. ◆ 22Ω when driver transistors with black color code are used. 33Ω when driver transistors with white color code are used.
6. ▲ Denotes factory tailored component.

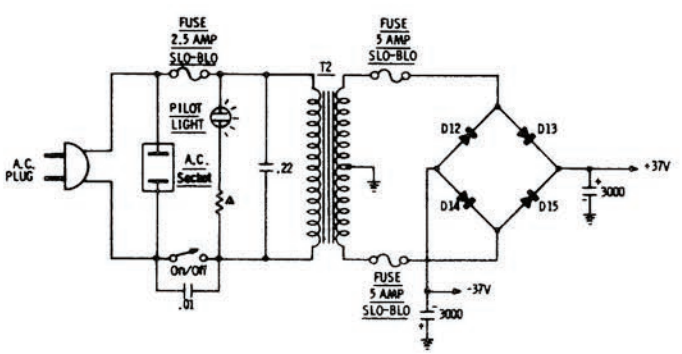

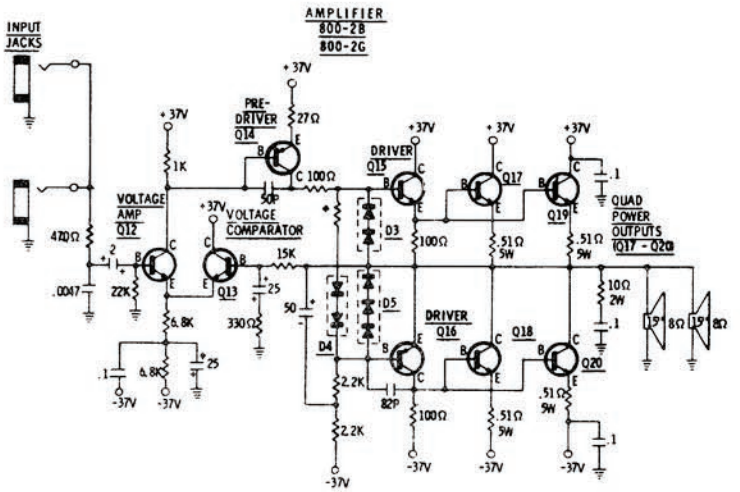

GIBSON AMPLIFIER
Dwg. No. 2 Model 800

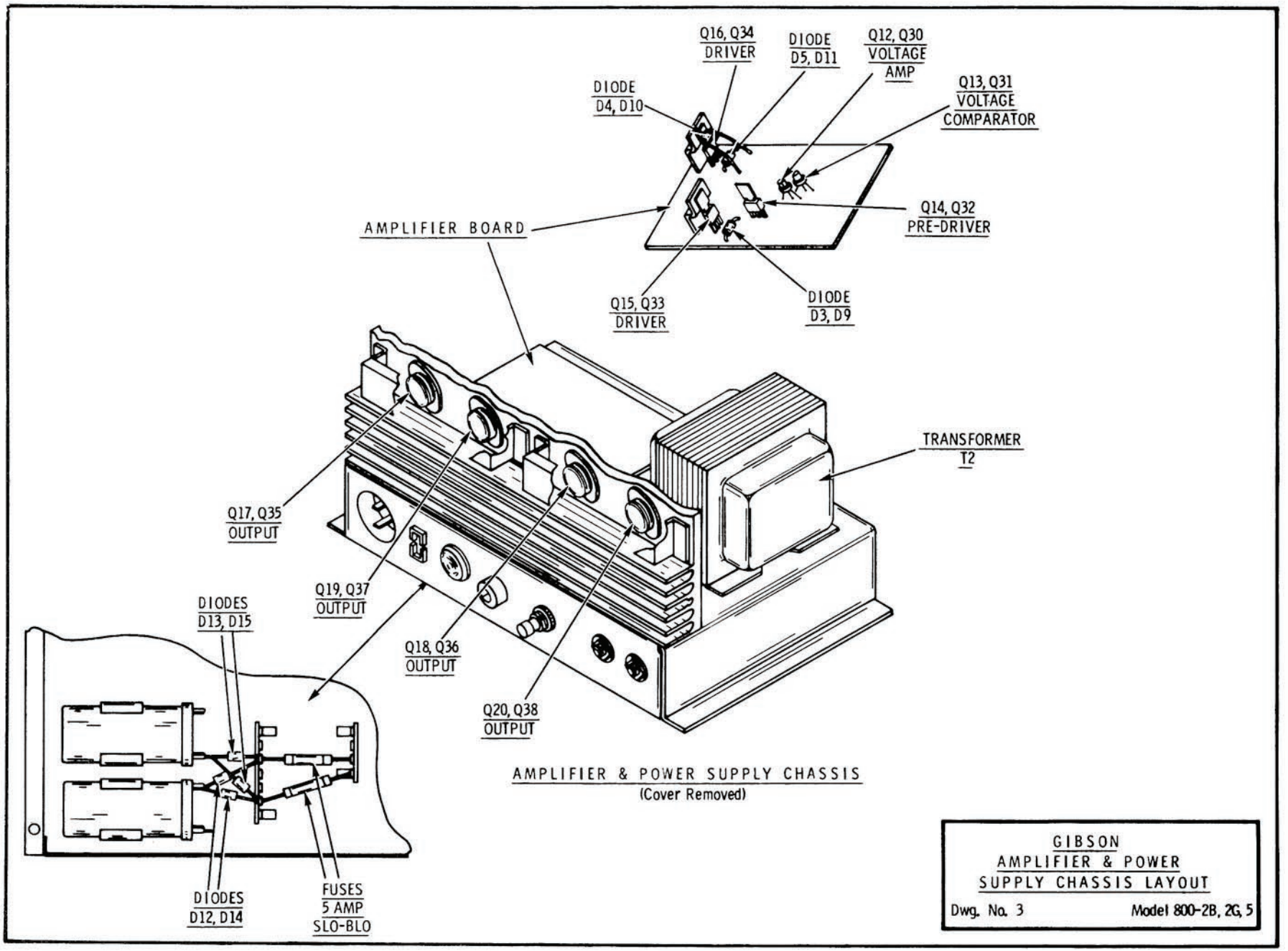

AMPLIFIER & POWER SUPPLY CHASSIS
(Cover Removed)

GIBSON
AMPLIFIER & POWER
SUPPLY CHASSIS LAYOUT

Dwg. No. 3 Model 800-2B, 2G, 5

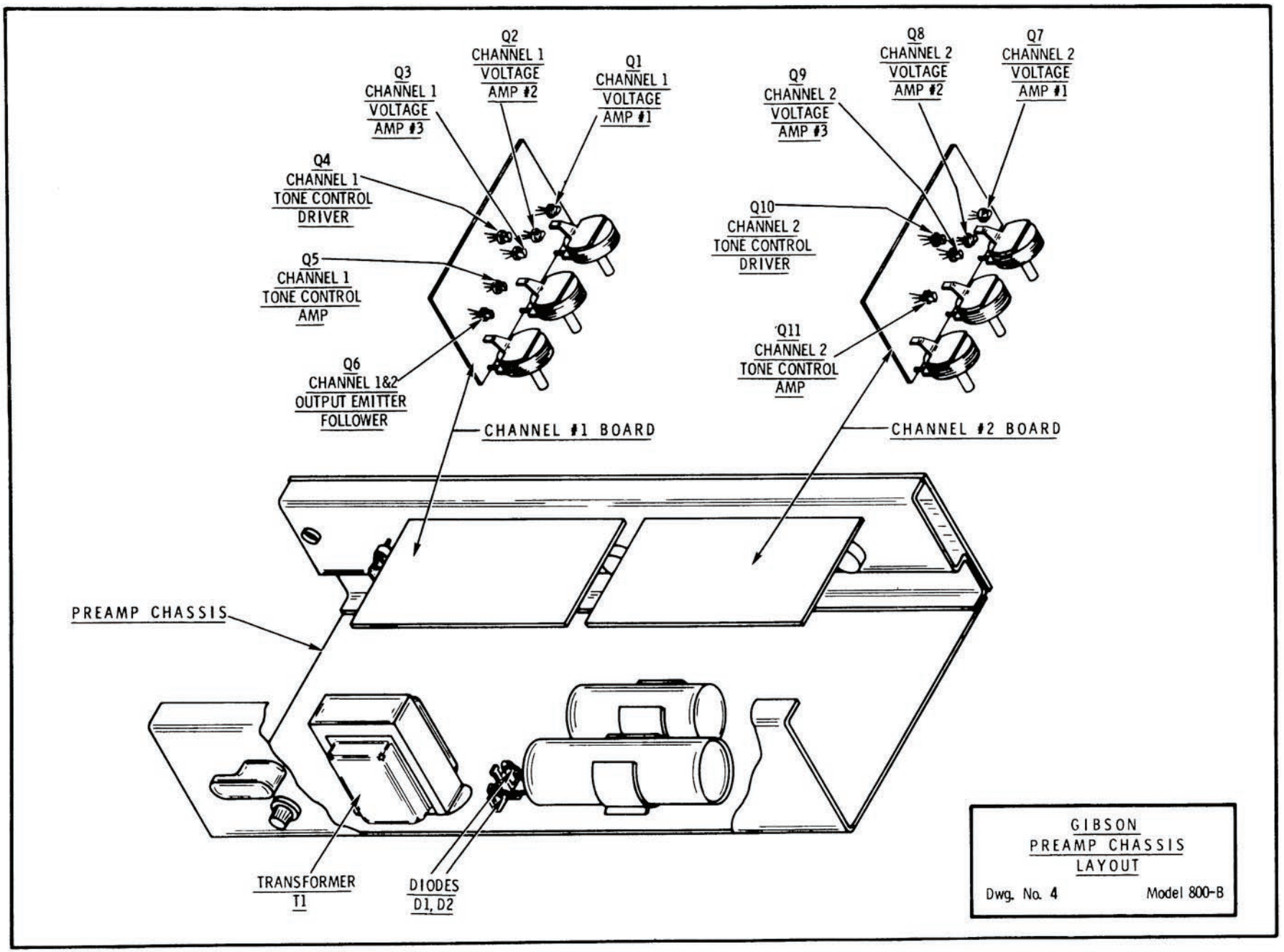
Q2
CHANNEL 1
VOLTAGE
AMP #2
Q3
CHANNEL 1
VOLTAGE
AMP #3
Q1
CHANNEL 1
VOLTAGE
AMP #1
Q4
CHANNEL 1
TONE CONTROL
DRIVER
Q5
CHANNEL 1
TONE CONTROL
AMP
Q6
CHANNEL 1&2
OUTPUT EMITTER
FOLLOWER
CHANNEL #1 BOARD
Q8
CHANNEL 2
VOLTAGE
AMP #2
Q7
CHANNEL 2
VOLTAGE
AMP #1
Q9
CHANNEL 2
VOLTAGE
AMP #3
Q10
CHANNEL 2
TONE CONTROL
DRIVER
Q11
CHANNEL 2
TONE CONTROL
AMP
CHANNEL #2 BOARD
PREAMP CHASSIS
TRANSFORMER
T1
DIODES
D1, D2
GIBSON
PREAMP CHASSIS
LAYOUT
Dwg. No. 4
Model 800-B

PARTS INFORMATION

STANDARD PARTS
Replacements for all standard electronic parts and hardware may be purchased directly from local suppliers generally in less time than would be required to obtain them from the factory.

SPECIAL PARTS
In addition to the standard replacement parts, special electronic and mechanical parts are also used. These parts are manufactured by and to the specifications of the factory. Order these parts directly from the factory since they would be difficult or impossible to obtain from other sources.

PARTS ORDERING INFORMATION
When ordering parts be sure to include the following information:

1. Model and Serial Number
2. Part Number
3. A description of the part
4. Specify how you want the part shipped.

Most special electronic parts and mechanical parts will have a part number stamped on them. In the event that the part number is missing, or you are unable to read the part number, a complete description of the part and where it is used will allow the factory to fill your parts order. When parts are ordered in the proper manner the factory is able to fill your orders promptly—delays that might result are avoided.

ADDRESS PARTS ORDERS TO:

C.M.I. SERVICE DEPT.
7373 No. Cicero Ave.
Chicago, Illinois 60646

IMPORTANT

IN ANY CORRESPONDENCE CONCERNING THIS INSTRUMENT ALWAYS INCLUDE MODEL AND SERIAL NUMBERS

PARTS LIST

THE PARTS LIST CONTAINS THE FOLLOWING INFORMATION:

1. Name of Part
2. Value, Tolerance and Code (when important)
3. Brief description
4. Where the part is found (assembly, printed circuit board and etc.)
5. Schematic Reference Number
6. PART NUMBER — USE IT!

This parts list includes all standard stock replacement parts. No attempt has been made to include every nut, bolt and screw. If the necessity for a non-listed part arises, please write describing the part's location and function as well as model and serial number of the unit.

PARTS LIST

Part	Description	Schematic Reference	Part Number
Assembly	Amplifier Board		996-016129
Assembly	Channel #1 Board		996-016143
Assembly	Channel #2 Board		996-016142
Assembly	Power Supply		997-016123
Assembly	Preamp Chassis		997-016138
Bumper	Rubber(Adhesive Back)		916-015372
Bumper	Rubber(Screw On)		916-009802-3
Capacitor	Electrolytic 1 UF 20V		945-008895-11
Capacitor	Electrolytic 2 UF 20V NP		945-008895-32
Capacitor	Electrolytic 5 UF 20V		945-008895-25
Capacitor	Electrolytic 20 UF 25V		945-015384
Capacitor	Electrolytic 25 UF 25V NP		945-008895-60
Capacitor	Electrolytic 50 UF 20V		945-008895-12
Capacitor	Electrolytic 50 UF 50V		945-008895-59
Capacitor	Electrolytic 1500 UF 75V & 60V		945-003139
Capacitor	Electrolytic 3000 UF 50V Can Neg		945-015576
Cord	Power-Detachable(800-2B,2G,&5)		989-013895
Cord	Power(800-B)		989-008717-6
Cover	Protective(800-B)		932-015966
Diode	Rectifier	D1,2	919-010623
Diode	Dual	D3,4,9,10	919-010454
Diode	Triple	D5,11	919-010454-1
Diode	Rectifier	D12,13,14,15	919-010459
Holder	Fuse(800-B)		906-008121
Holder	Fuse(800-2B,2G,&5)		906-013301
Insulator	Power Transistors(800-2B,2G,&5)		908-002346
Jack	Phone In/Out Signal(800-2B,2G,&5)		910-010878
Jack	Phone Audio Output(800-B)		910-013556-1
Jack	Phone Input Jacks(800-B)		910-013556-3
Knob	Control(800-B)		915-016216-1
Light	Panel(800-B)		939-013564
Light	Pilot(800-2B,2G,&5)		939-015953
Panel	Front Clear Plastic		922-016262
Plug	Male A.C. In(800-2B,2G,&5)		906-015343
Potentiometer	10K Volume, Bass,& Treble Controls	VR1-6	925-010435-21
Receptacle	Pre-Amp A.C.(800-2B,2G,&5)		906-007235
Resistor	WW 10 Ohm 2W		924-010471-100
Resistor	WW .51 Ohm 5W		924-008896
Socket	Power Transistors(800-2B,2G,&5)		906-010453
Speaker	12"(800-5)		985-015314
Speaker	15"(800-2B)		985-015958
Speaker	15"(800-2G)		985-015983
Switch	On/Off Polarity(800-B)		960-010636-2
Switch	Push-Push(800-2B,2G,&5)		960-003574
Transformer	Power(800-2B,2G,&5)	T1	954-004356
Transformer	Power(800-B)	T2	954-015967
Transistor	Voltage Amp #2 PNP	Q2,8	991-013599
Transistor	Pre-Driver PNP	Q14,32	991-015062
Transistor	Driver with Heatsink	Q16,34	995-016130
Transistor	Driver with Heatsink	Q15,33	995-016131
Transistor	Power Output	Q17-20,35-38	992-003139
Transistor	All Others	Q1,3-7,9-13,30,31	991-013544

No Tone Control: Cathode of 3rd 6J7 grounded.

Cuts Out: Speaker wires loose at Speaker Plug.

Power Transformer Loose: The bolt in one corner not holding Transformer.

Dead: Grid caps shorting out grid leads. Pull spaghetti tubing up over exposed metal of Grid clip.

Hum: 195- Excessive hum can be eliminated if first filter lead is run down center of chassis instead of along sockets at rear of chassis.

Hum: 185- Hum in earlier models can be substantially reduced by re-routing grid lead of 1st 6J7 under chassis and up to grid near socket, also connect #14 bus bar from mike jack to instrument volume control to rack at 6J7 end of chassis, also keep filter condenser leads away from coupling condensers of 1st 6J7-if necessary shield this condenser.

195- Serial#16023: Tone control circuit was changed to eliminate hum pickup of tone control choke.

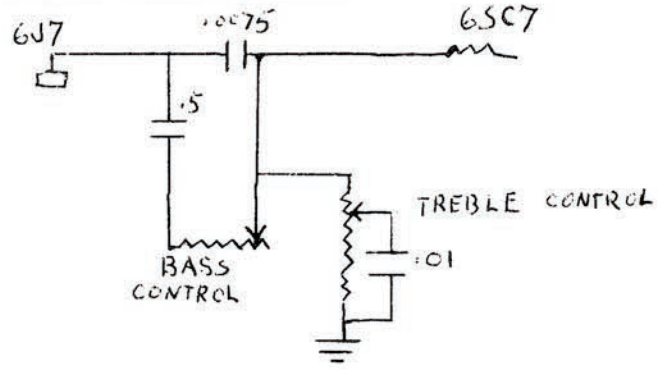

185- Play before warming up, much of it would die out quietly-Tube shorting internally.

185- Hum can be reduced by twisting together wires leading from voice control, and tieing shielded leads away.

RE: HUM IN 30 WATT 185 AMPLIFIER

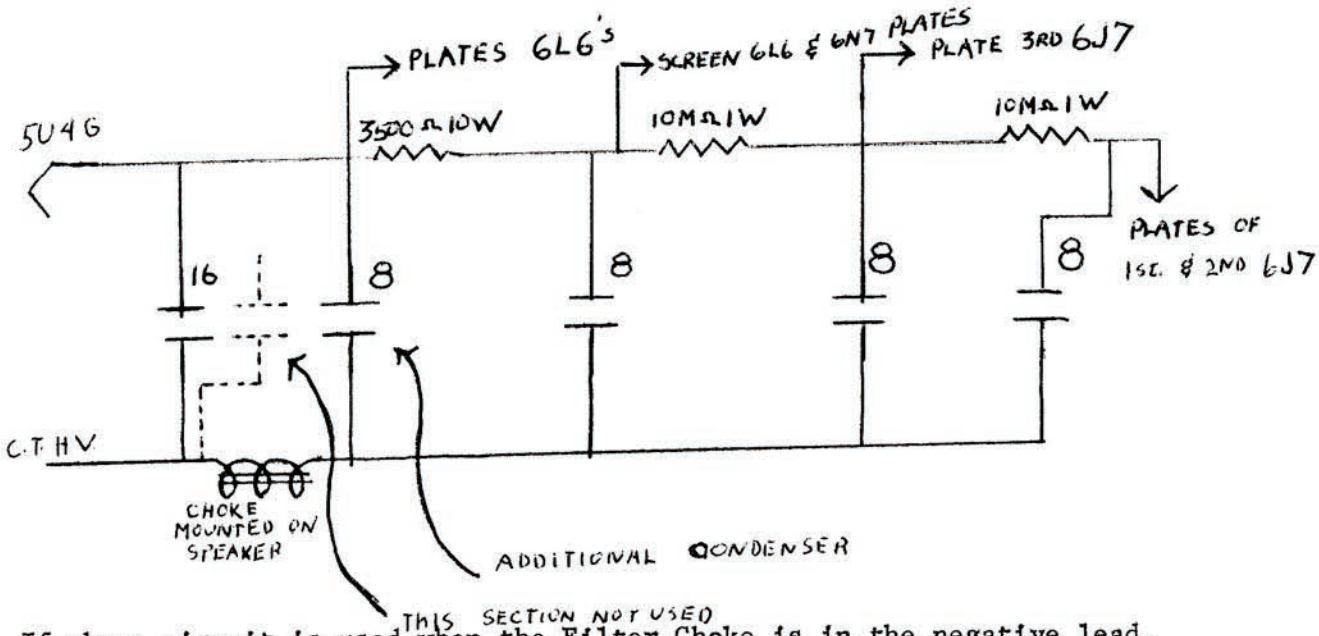

If above circuit is used when the Filter Choke is in the negative lead, hum will be at a minimum. An additional condenser will have to be installed as condensers mounted in this Amp have a common negative lead. This condenser is not needed when the filter choke is placed in the positive side of power supply as shown below, but this necessitates a 4 wire speaker cable as the choke is usually mounted on speaker.

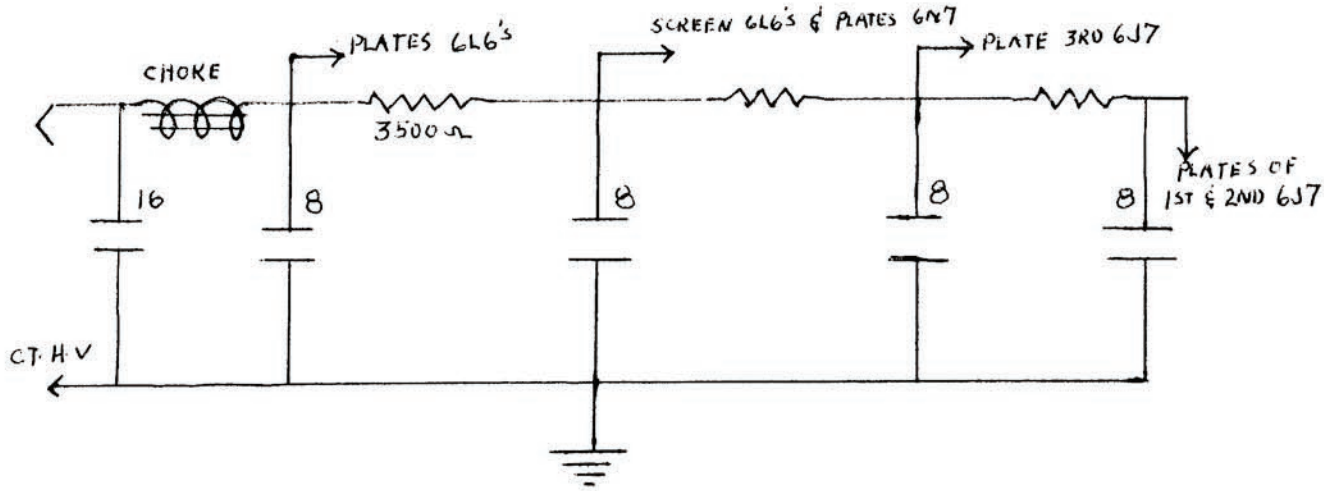

EH 125 SERVICE HINTS

Motorboating: On the models where the microphone control is wide open, it can be eliminated by using .25 or .5 mfd. bypass condenser in the plate decoupling circuit, in place of the .05 or .1mfd. now used.

Noisy: Loose connections prevelent in early runs of this model Look for them everywhere Also check output transformer for low volume, distortion, noise, and over heated 6V6,s.

Noisy Mike Stage: 2 Meg. input load resistor not soldered to grounding lug of mike jack.

No Bass: Cone glued to pole piece. Replace speaker cone..

6V6,S won't light: Filament lead from transformer is not soldered to filament lug of 6V6 socket.

Low Volume: Check output transformer primary, half found shorted. May be remedied by pushing, pulling, or twisting leads where they enter transformer.

Dead: Excess of solder shorting out power supply at plate terminal strip of first two stages.

Smokes: On 220/110 volt Amplifiers, if power transformer leads are not connected in correct phase, the transformer will heat up.

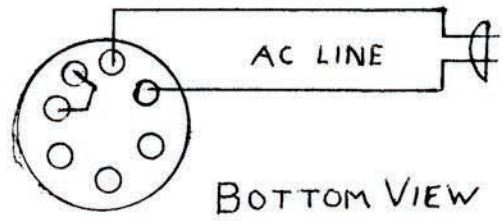

Distortion: Check 1 Meg. resistor on plate of 6SJ7. This resistor has been found to cause low volume and distortion on many Amps.

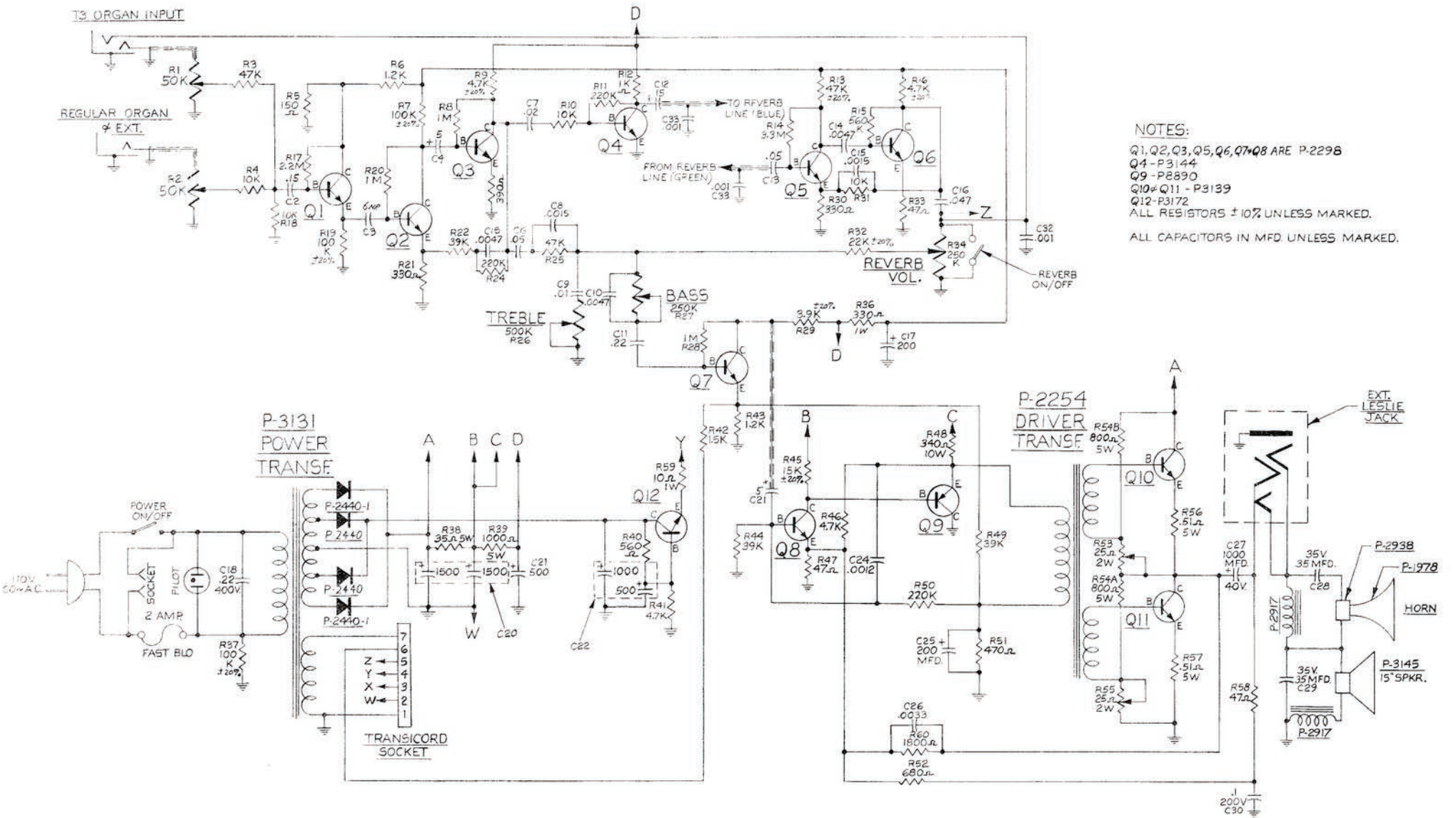

NOTES:

Q1, Q2, Q3, Q5, Q6, Q7 & Q8 ARE P-2298
Q4 - P3144
Q9 - P8890
Q10 & Q11 - P3139
Q12 - P3172
ALL RESISTORS ± 10% UNLESS MARKED.

ALL CAPACITORS IN MFD. UNLESS MARKED.

SABRE AMPLIFIER

VOLTAGE CHART

A Supplement to Sabre Amplifier Schematics

TRANSISTOR VOLTAGE CHART			
Q No.	Collector	Base	Emitter
1	+ 7.5V.	Ø	+ 5.5V.
2	+ 2V.	+ . 5V.	Ø
3	+ 12V.	+ . 7V.	+ . 75V.
4	+ 7.5V.	+ . 5V.	Ø
5	+ 5.5V.	+ . 5V.	+ . 5V.
6	+ 6.5V.	+ . 5V.	Ø
7	+ 12V.	+ 2V.	+ 3V.
8	+ 12V.	+ 1.5V.	+ 7V.
9	+ Ø	+ 12.5V.	+ 12.5V.
10	+ 55V.	+ 25.5V.	+ 25V.
11	+ 25V.	+ 5V.	+ . 3V
12	+ 13.5V.	+ 12V.	+ 12V.

POWER SUPPLY B+ VOLTAGES

A = 55V.
B & C = 50V.
D = 22V.

IMPORTANT

The above voltage readings were measured to ground with a Simpson Model 260 V. O. M. Voltage readings shown are intended only as a guide in troubleshooting. Voltages will vary from unit to unit due to normal manufactoring tolerances.

CAUTION

Exercise extreme care when making voltage measurements. Accidental shorting of transistor leads may damage the transistor.

Part	Description	Schematic Reference	Part Number
Assembly	Fuse Post.....	.....	p-6303
Assembly	Reverb.....	.....	.....
Capacitor	1000mfd, 40V (output).....	C27.....	P-8895-1
Capacitor	15mfd, 20V.....	C12.....	P-8895-10
Capacitor	500mfd, 25V.....	C21.....	P-8895-19
Capacitor	5mfd, 20V.....	C4.....	P-8895-25
Capacitor	6mfd, 6V NP.....	C3.....	P-8895-27
Capacitor	200mfd, 15V.....	C17.....	P-8895-28
Capacitor	1500-1500mfd, 76V-65V.....	C20.....	P-3193
Control	25ohm, 2W 20%.....	R53, R55.....	P-8863-1
Control	250K, Audio.....	R27, R34.....	CBA-811-3701
Control	50K, Audio.....	R1, R2.....	CBA-811-3703
Control	500K Audio.....	R26.....	CBA-811-3707
Cord	Line.....	.....	P-8717
Diffraction Horn	.....	.....	P-1978
Driver Unit	.....	.....	P-2938
Fuse	2 amp Regular.....	.....	.....
Jack	.....	.....	J-11
Jack	Stereo.....	.....	J-12B
Jack	.....	.....	J-13B
Knob	Plastic Wall, Small.....	.....	K-900
Resistor	35ohm, 5W 10%.....	R38.....	P-6811
Resistor	1K, 5W 10%.....	R39.....	P-6811-10
Resistor	340ohm, 10W 10%.....	R48.....	P-6811-50
Resistor	800-800ohm, 5W 10%.....	R54A, B.....	P-6811-56
Resistor	51ohm, 5W 10%.....	R56, R57.....	P-8896
Speaker	15".....	.....	P-3145
Transformer	Power.....	.....	P-3131
Transformer	Driver	.....	P-2254
Transistor	Insulator.....	.....	P-8882
Transistor	Low Noise.....	Q8.....	P-2298
Transistor	Socket.....	.....	P-8871
Transistor	Output.....	Q10,11.....	P-3139
Transistor	Socket.....	.....	P-8871
Transistor	Voltage Driver	Q9.....	P-8890
Transistor	With Heat Sink.....	Q4.....	P-3144

DUO MEDALIST PARTS LIST

Part	Description	Schematic Reference	Part Number
CONSOLE ASSEMBLY			
Assembly	Reverb & Tremolo Footswitch		977-012789
Reverberation	Unit		984-012419
Speaker	12" 8 Ohm		985-012431
Switch	S.P.S.T. Foot		960-003574
Switch	S.P.D.T. Foot		960-010698
CONTROL PANEL ASSEMBLY			
Assembly	Pilot Light		939-011452
Jack	Phone		910-012404
Knob	Control		915-012408
Knob	On-Off Polarity		915-012451
Potentiometer	250K Special Linear Taper		925-012424
Potentiometer	2 Meg Audio Taper	VR2, 6	925-012425
Potentiometer	2 Meg Reverse Audio Taper	VR1, 5	925-012426
Potentiometer	250K Audio Taper	VR8	925-012427
Potentiometer	250K Audio Taper	VR3, 7, 10	925-012428
Potentiometer	1.5 Meg Reverse Audio Taper	VR9	925-012429
Reverb	Complete Unit		984-012419
Switch	3 Position Polarity		960-012430
PRE-AMPLIFIER ASSEMBLY			
Assembly	Photocell	P1	948-012416
Capacitor	Electrolytic 1 UF 6V		945-011469-5
Capacitor	Electrolytic 40-20-20 UF @ 350V		945-012440
Potentiometer	500Ω	VR11	925-012423
Resistor	10K 7W W.W.		924-012434-4
Transformer	Reverb	T3	955-003555
Tube	12AU7A	V3, 5	990-001291-25
Tube	6EU7	V1, 2, 4	990-003522
POWER AMPLIFIER ASSEMBLY			
Assembly	Power Amplifier Chassis		997-012441
Capacitor	Electrolytic 20-20 UF @ 500V		945-012437
Capacitor	Electrolytic 25 UF 12V		945-011469-8
Capacitor	Electrolytic 100 UF 50V		945-011469-9
Cord	A. C. Line		989-012435
Diode	Silicon	D3	919-010829
Diode	Silicon 1200V Piv	D1, 2	919-012414
Fuse	2 Amp. Slo-Blo		939-013304
Holder	Fuse		906-006303
Jack	2T		910-010878
Potentiometer	100 Ohm 2W	VR4	925-012422
Resistor	1K 7W W.W.		924-012434-1
Resistor	3K 7W W.W.		924-012434-2
Resistor	14K 15W W.W.		924-012434-3
Socket	Phone		906-003512
Transformer	Power	T1	954-003690
Transformer	Output	T2	955-011408
Tube	7591	V7, 8	990-003521
Tube	12AX7	V6	990-003570

993-012453

Printed in U.S.A.



SERVICE MANUAL

Gibson

DUO MEDALIST AMPLIFIER

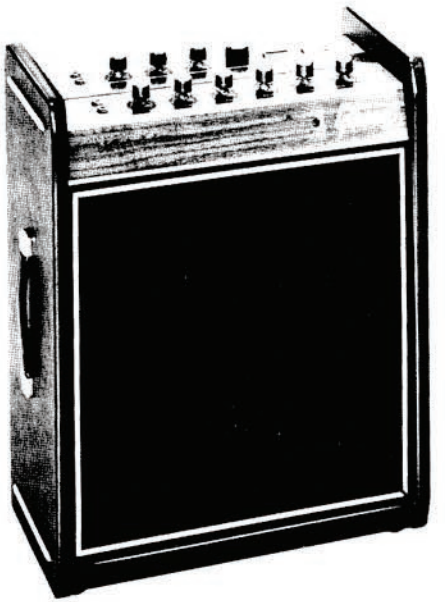

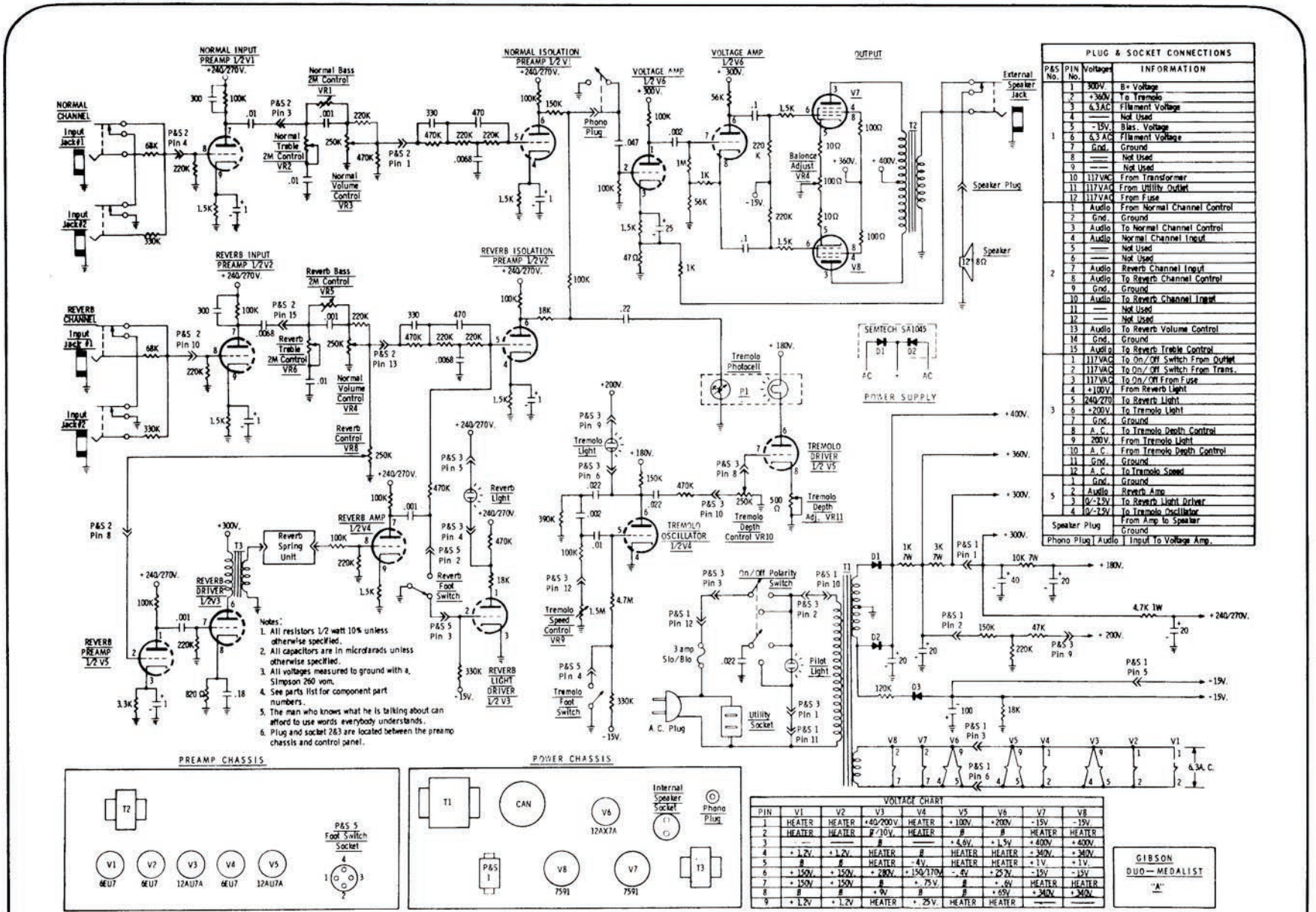

PLUG & SOCKET CONNECTIONS

P&S No.	PIN No.	Voltages	INFORMATION
1	1	300V.	B+ Voltage
	2	+360V.	To Tremolo
	3	6.3 AC	Fillament Voltage
	4	——	Not Used
	5	-15V.	Bias. Voltage
	6	6.3 AC	Fillament Voltage
	7	Gnd.	Ground
	8	——	Not Used
	9	——	Not Used
	10	117VAC	From Transformer
	11	117VAC	From Utility Outlet
	12	117VAC	From Fuse
2	1	Audio	From Normal Channel Control
	2	Gnd.	Ground
	3	Audio	To Normal Channel Control
	4	Audio	Normal Channel Input
	5	——	Not Used
	6	——	Not Used
	7	Audio	Reverb Channel Input
	8	Audio	To Reverb Channel Control
	9	Gnd.	Ground
	10	Audio	To Reverb Channel Input
	11	——	Not Used
	12	——	Not Used
	13	Audio	To Reverb Volume Control
	14	Gnd.	Ground
	15	Audio	To Reverb Treble Control
3	1	117VAC	To On/Off Switch From Outlet
	2	117VAC	To On/Off Switch From Trans.
	3	117VAC	To On/Off From Fuse
	4	+100V.	From Reverb Light
	5	240/270	To Reverb Light
	6	+200V.	To Tremolo Light
	7	Gnd.	Ground
	8	A.C.	To Tremolo Depth Control
	9	200V.	From Tremolo Light
	10	A.C.	From Tremolo Depth Control
	11	Gnd.	Ground
	12	A.C.	To Tremolo Speed
5	1	Gnd.	Ground
	2	Audio	Reverb Amp
	3	0/-7.5V	To Reverb Light Driver
	4	0/-7.5V	To Tremolo Oscillator
Speaker Plug			From Amp to Speaker
			Ground
Phono Plug		Audio	Input To Voltage Amp.

VOLTAGE CHART

PIN	V1	V2	V3	V4	V5	V6	V7	V8
1	HEATER	HEATER	+40/200V.	HEATER	+100V.	+200V.	-15V.	-15V.
2	HEATER	HEATER	0/-10V.	HEATER	#	#	HEATER	HEATER
3	—	——	#	——	+6.6V.	+1.5V.	+400V.	+400V.
4	+1.2V.	+1.2V.	HEATER	#	HEATER	HEATER	+340V.	+340V.
5	#	#	HEATER	-4V.	HEATER	HEATER	+1V.	+1V.
6	+150V.	+150V.	+280V.	+150/170V.	-.4V.	+25V.	-15V.	-15V.
7	+150V.	+150V.	#	+75V.	#	+.6V.	HEATER	HEATER
8	#	#	+9V.	#	#	+65V.	+340V.	+340V.
9	+1.2V.	+1.2V.	HEATER	+25V.	HEATER	HEATER	——	——

GIBSON
DUO—MEDALIST
"A"

REVERB 12 AMPLIFIER

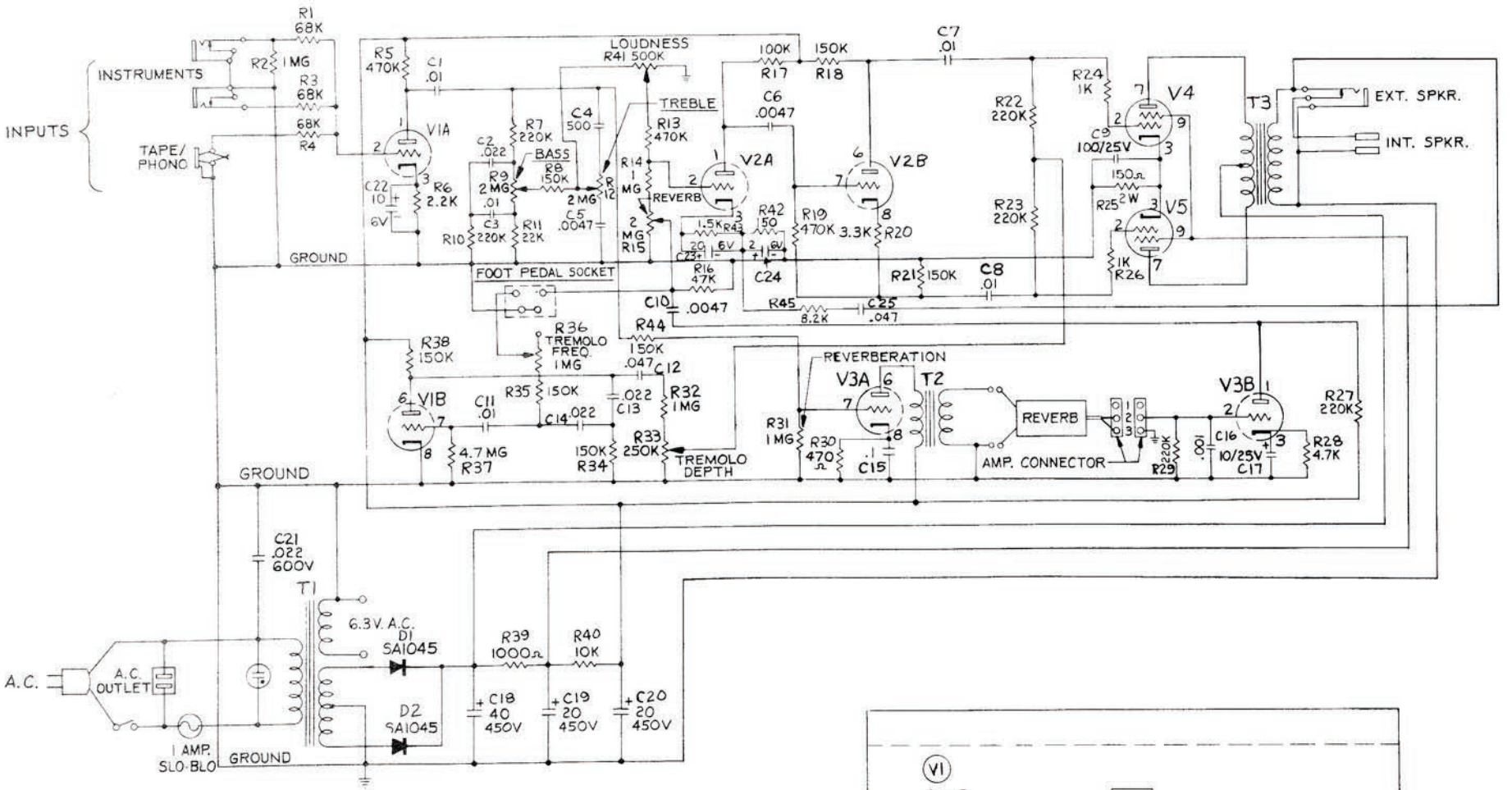

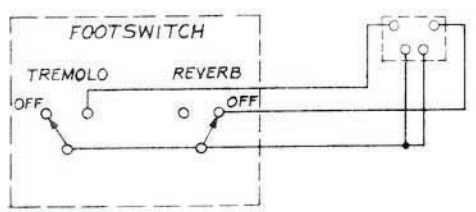

FOOTSWITCH & PLUG

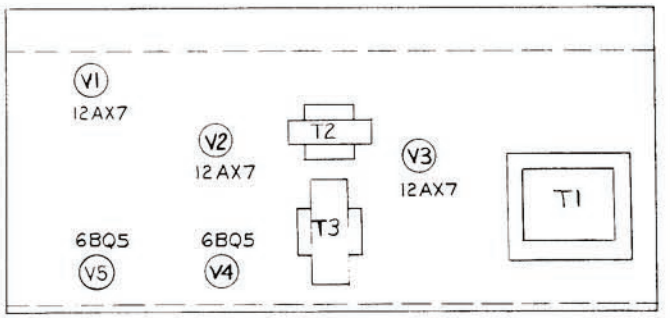

TUBE LOCATION CHART

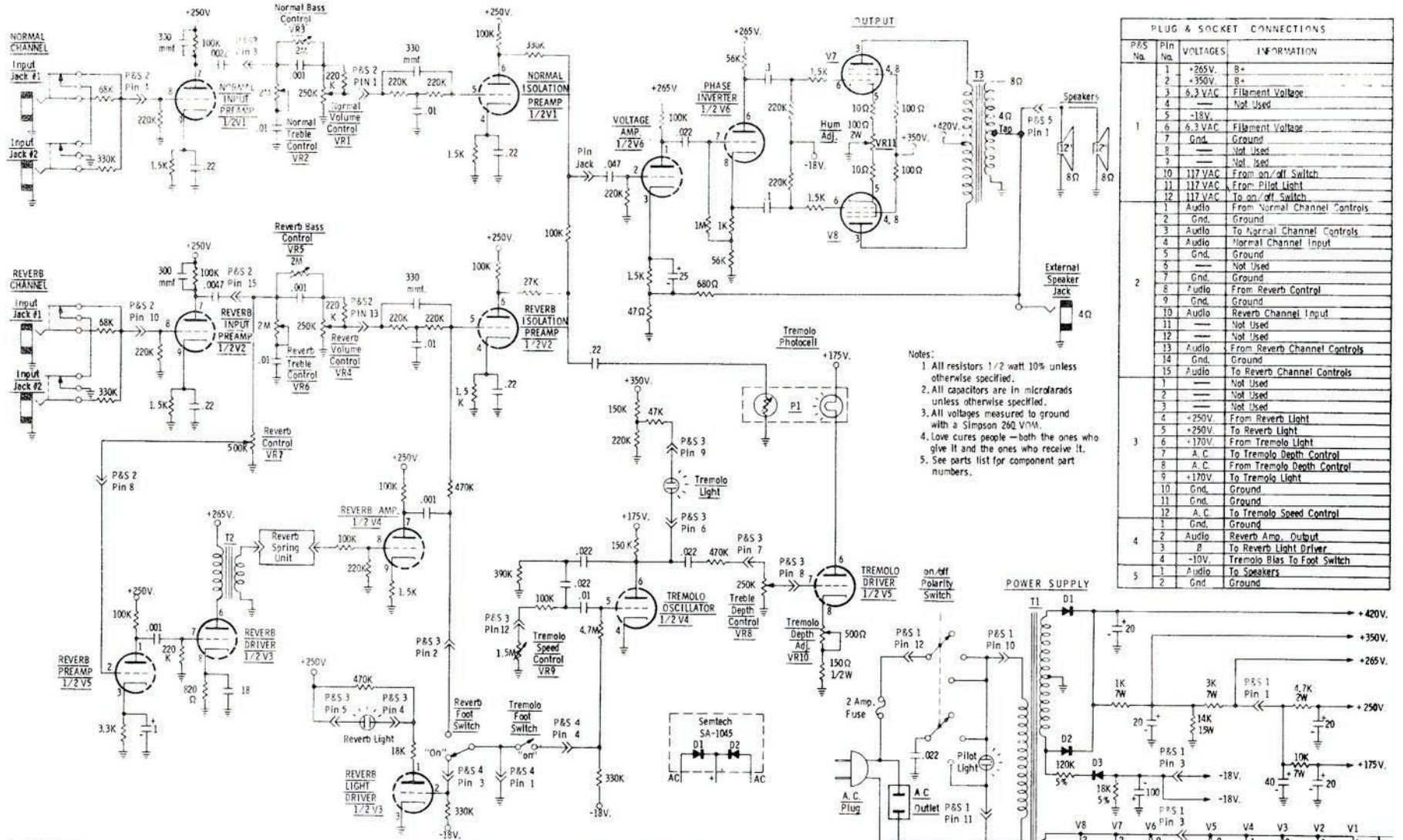

PLUG & SOCKET CONNECTIONS

P&S No.	Pin No.	VOLTAGES	INFORMATION
1	1	+265V.	B+
	2	+350V.	B+
	3	6.3 VAC	Filament Voltage
	4	—	Not Used
	5	-18V.	
	6	6.3 VAC	Filament Voltage
	7	Gnd.	Ground
	8	—	Not Used
	9	—	Not Used
	10	117 VAC	From on/off Switch
	11	117 VAC	From Pilot Light
	12	117 VAC	To on/off Switch
2	1	Audio	From Normal Channel Controls
	2	Gnd.	Ground
	3	Audio	To Normal Channel Controls
	4	Audio	Normal Channel Input
	5	Gnd.	Ground
	6	—	Not Used
	7	Gnd.	Ground
	8	Audio	From Reverb Control
	9	Gnd.	Ground
	10	Audio	Reverb Channel Input
	11	—	Not Used
	12	—	Not Used
	13	Audio	From Reverb Channel Controls
	14	Gnd.	Ground
	15	Audio	To Reverb Channel Controls
3	1	—	Not Used
	2	—	Not Used
	3	—	Not Used
	4	+250V.	From Reverb Light
	5	+250V.	To Reverb Light
	6	+170V.	From Tremolo Light
	7	A.C.	To Tremolo Depth Control
	8	A.C.	From Tremolo Depth Control
	9	+170V.	To Tremolo Light
	10	Gnd.	Ground
	11	Gnd.	Ground
	12	A.C.	To Tremolo Speed Control
4	1	Gnd.	Ground
	2	Audio	Reverb Amp. Output
	3	Ø	To Reverb Light Driver
	4	-10V.	Tremolo Bias To Foot Switch
5	1	Audio	To Speakers
	2	Gnd	Ground

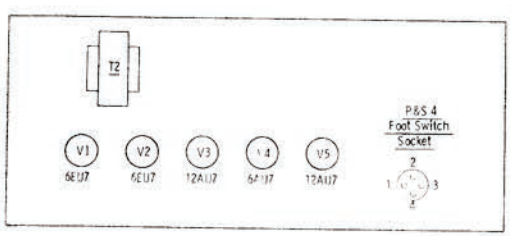

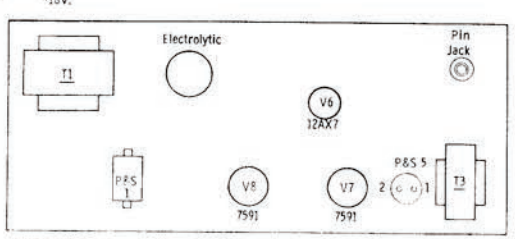

VOLTAGE CHART

Pin	V1	V2	V3	V4	V5	V6	V7	V8
1	Heater	Heater	+240V.	Heater	+100V.	+175V.	—	—
2	Heater	Heater	+2.5V.	Heater	Ø	Ø	Heater	Heater
3	—	—	Ø	—	+4.5V.	+1.4V.	+410V.	+410V.
4	+1.2V.	+1.2V.	Heater	Ø	Heater	Heater	+350V.	+350V.
5	Ø	Ø	Heater	-.3V.	Heater	Heater	+ 4V.	+ 4V.
6	+160V.	+160V.	+255V.	+170 V.	170V	+210V.	+8.7V.	+8.7V.
7	+160V.	+160V.	Ø	+160V.	Ø	+ .2V.	Heater	Heater
8	Ø	Ø	+8.9V.	Ø	+3.4V.	+60V.	+350V.	+350V.
9	+1.2V.	+1.2V.	Heater	+1.2V.	Heater	Heater		

GIBSON
SUPER MEDALIST
Dwg. No. 1

P A R T S L I S T

SUPER MEDALIST

PART	DESCRIPTION	SCHEMATIC REFERENCE	PART NUMBER
CONSOLE ASSEMBLY			
Assembly	Reverb/Tremolo Footswitch	.....	997-012789
Reverb	Unit Complete	.....	984-012419
Speaker	12" 8 Ohm	.....	985-012431
Switch	S.P.S.T. Foot	.....	960-003574
Switch	S.P.D.T. Foot	.....	960-010698
CONTROL PANEL ASSEMBLY			
Assembly	Pilot Light	.....	939-011452
Jack	Phone	.....	910-012404
Knob	Control	.....	915-012408
Knob	Off/On Polarity	.....	915-012451
Potentiometer	250K Norm. & Reverb Vol. & Trem. Depth Cont.	VR1,4,8.....	925-012428
Potentiometer	2M Norm. & Reverb Bass Controls	VR3,5.....	925-012426
Potentiometer	2M Norm. & Reverb Treble Controls	VR2,6.....	925-012425
Potentiometer	500K Reverb Control	VR7.....	925-012427
Potentiometer	1.5M Tremolo Speed Control	VR9.....	925-012429
Reverb	Complete Unit	.....	984-012419
Switch	3 Position Polarity	.....	960-012430
PREAMP CHASSIS			
Assembly	Photocell	P1.....	948-012416
Capacitor	Electrolytic 1 UF 6V	.....	945-011468-001
Capacitor	Electrolytic 40-20-20 UF 350V	.....	945-012440
Potentiometer	500 Ohm Tremolo Depth Adj	VR10.....	925-012423
Resistor	10K 7W W.W	.....	924-012434-4
Transformer	Driver	T2.....	955-003555
Tube	12AU7A	V3,5.....	990-012407
Tube	6EU7	V1,2,4.....	990-003522
POWER AMPLIFIER ASSEMBLY			
Capacitor	Electrolytic 25 UF 12V	.....	945-011468-6
Capacitor	Electrolytic 100 UF 50V	.....	945-011468-7
Capacitor	Electrolytic 20-20 UF 500V	.....	945-012437
Cord	Line	.....	989-012435
Diode	Keying	D3.....	919-010829
Fuse	Slo-Blo 2 Amp	.....	939-013304
Holder	Fuse	.....	906-006303
Jack	Phone	.....	910-010878
Jack	Phono	.....	910-012407
Potentiometer	Hum Adj. 100 Ohms 2W	VR11.....	925-012422
Resistor	1K 7W W.W	.....	924-012434-1
Resistor	3K 7W W.W	.....	924-012434-2
Resistor	14K 15W W.W	.....	924-012434-3
Transformer	Output	T3.....	955-011408
Transformer	Power	T1.....	954-003690
Tube	12AX7A	V6.....	990-003570
Tube	7591	V7,8.....	990-003521

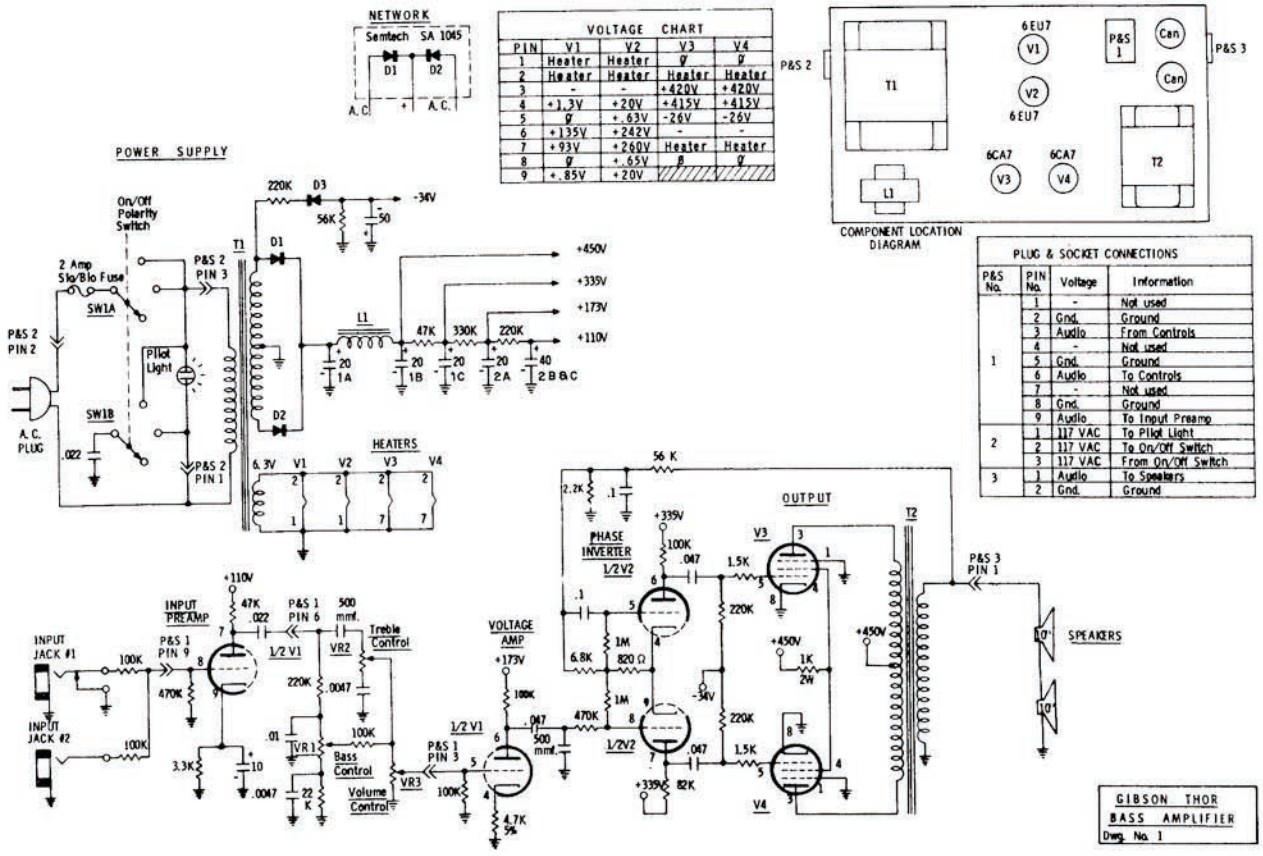

PARTS LIST

Part	Description	Schematic Reference	Part Number
Transformer	Power	T-1	954-003622
Transformer	Output	T-2	955-003623
Choke		L-1	956-003624
Diode	Dual Rectifier	D1-D2	919-012414
Diode	Rectifier	D3	919-003517
Switch	Polarity	SW-1A&B	960-012430
Speakers	10"		985-003631
Potentiometer	Volume Control 1 Meg-L		925-003525
Potentiometer	Bass Control 2 Meg-L		925-003529
Potentiometer	Treble Control 2 Meg-A		925-003559
Capacitor	Filter, 50 Mfd 50V		945-003627
Capacitor	Filter, 20-20-20-475V	C1 AB&C	945-003626
Capacitor	Filter, 20-20-20-475V	C2 AB&C	945-003626

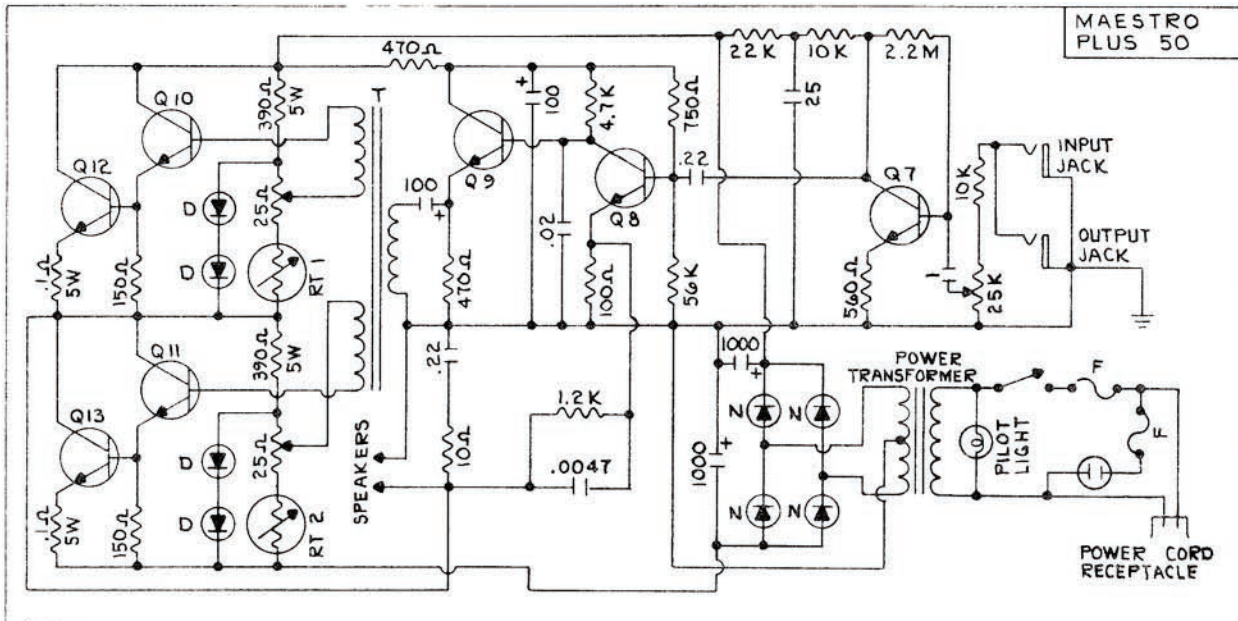

NOTES:

1. D DHD 800 SILICONE DIODE
2. N F-1 RECTIFIER
3. T BERRY 7245
4. F 3 AMP BUSS FUSE
5. Q7 GIBSON P-8393
6. Q8, Q9 2N2926G BERRY 7005G
7. Q10, Q11 MATCHED PAIR 2N3053 BERRY 7253
8. Q12, Q13 MATCHED PAIR 2N3055 BERRY 7214
9. RT 1, RT 2 25 OHM THERMISTORS, BETA = 1120 BERRY 7390-25 THERMALLY CONNECTED TO Q12 & Q13

GIBSON, INC.	SCHEMATIC DIAGRAM
DRAWN CEK OCT-11-67	MAESTRO
ENGINEERED 10-11-67	PLUS 50

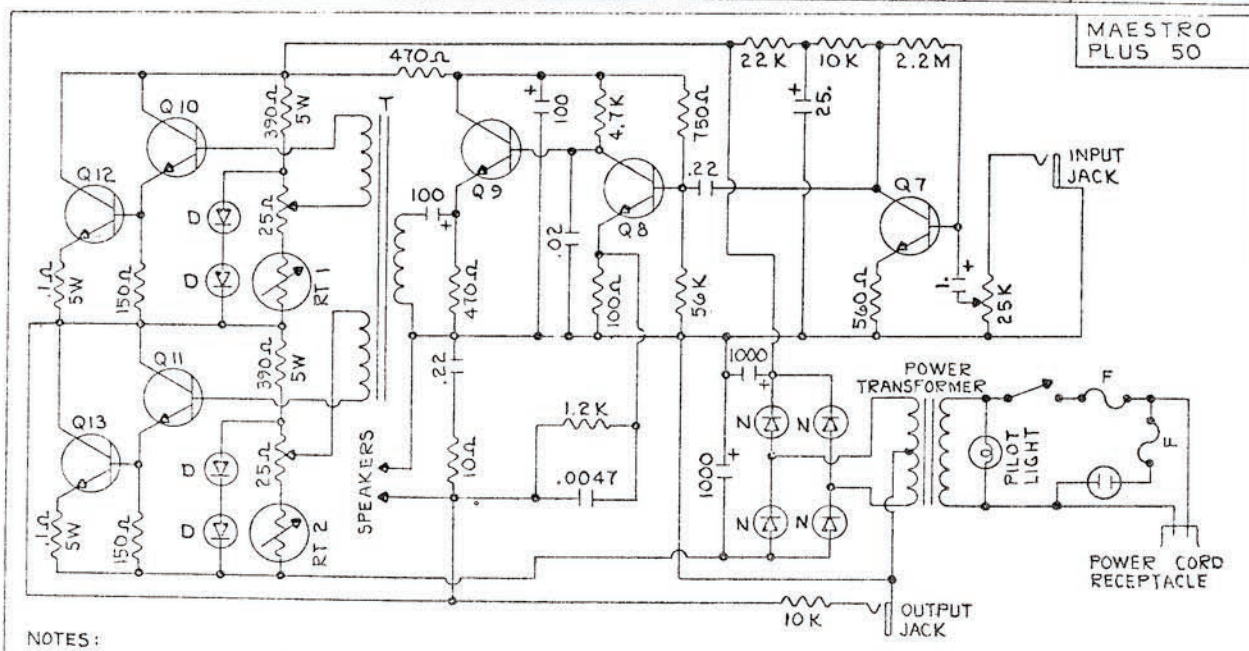

NOTES:

1. D DHD 800 SILICONE DIODE
2. N F-1 RECTIFIER
3. T BERRY 7245
4. F 3 AMP BUSS FUSE
5. Q7 GIBSON P-8393
6. Q8, Q9 2N2926G BERRY 7005G
7. Q10, Q11 MATCHED PAIR 2N3053 BERRY 7253
8. Q12, Q13 MATCHED PAIR 2N3055 BERRY 7214
9. RT 1, RT 2 25 OHM THERMISTORS, BETA = 1120 BERRY 7390-25 THERMALLY CONNECTED TO Q12 & Q13

RELOC OUTPUT JACK & 10K RES.	
CEK JAN-11-68	1-11-68
GIBSON, INC.	SCHEMATIC DIAGRAM
DRAWN CEK OCT-11-67	MAESTRO
ENGINEERED 10-11-67	PLUS 50

DESCRIPTION	PART NUMBER
CAPACITORS-BLACK BEAUTY	
.001 Mfd. 400V	CD-IT-001-400-10
.001 Mfd. 600V	CD-IT-001-600-10
.0022 Mfd.200V	CD-IT-0022-200-10
.0022 Mfd.400V	CD-IT-0022-400-10
.0047 Mfd.200V	CD-IT-0047-200-10
.0047 Mfd.400V	CD-IT-0047-400-10
.01 Mfd. 200V	CD-IT-01-200-10
.01 Mfd. 400V	CD-IT-01-400-10
.01 Mfd. 500V	CD-IT-01-500-10
.01 Mfd. 600V	CD-IT-01-600-10
.015 Mfd.400V	CD-2D-015-400-10
.02 Mfd. 200V	CD-2D-02-200-10
.02 Mfd. 400V	CD-2D-02-400-10
.02 Mfd. 500V	CD-2D-02-500-20
.022 Mfd. 600V	CD-2D-022-600-20
.03 Mfd. 100V	CD-2D-03-100-20
.033 Mfd. 200V	CD-2D-03-200-20
.047 Mfd. 200V	CD-2D-047-200-20
.047 Mfd. 400V	CD-2D-047-400-20
.047 Mfd. 600V	CD-2D-047-600-20
.047 Mfd. 1000V	CD-2D-047-1000-20
.22 Mfd. 400V	CD-2D-22-400-20
DISC CAPACITORS	
15 PF 1000V	CD-2D-15P-1000-5
30 PF 1000V	CD-2D-30P-1000-5
150PF 1000V	CD-2D-150P-1000-10
180PF 1000V	CD-2D-180-1000-10
270PF 1000V	CD-2D-270P-1000-10
15 mmfd. 500V	CD-2D-15P-500-10
30 mmfd. 500V	CD-2D-30P-500-10
100 mmfd. 1000V	CD-2D-100P-1000-10
150 mmfd. 50V	CD-2D-150P-50-10
180 mmfd. 250V	CD-2D-180P-250-10
270 mmfd. 1000V	CD-2D-270P-1000-10
.01 Mfd. 50V	CD-2D-01-50-20
.01 Mfd. 1000V	CD-2D-01-1000-20
.002 Mfd. 1000V	CD-2D-002-1000-20
.0015 Mfd. 100V	CD-2D-0015-100-10
.02 Mfd. 50V	CD-2D-02-50-20
.01 Mfd. 100V	CD-2D-01-100-10
.01 Mfd. 1400V	CD-2D-01-1400-20
.03 Mfd. 50V	CD-2D-03-50-20
.0033 Mfd. 500V	CD-2D-0033-500-20
.005 Mfd. 50V	CD-2D-05-50-20
.005 Mfd. 1000V	CD-2D-05-1000-20
.22 Mfd. 12V	CD-2D-22-12-20
.22 Mfd. 50V	CD-2D-22-50-20

DESCRIPTION	PART NUMBER
CAPACITORS CERAMIC	
15 mmfd. 500V	CD-6C-15P-500-10
22 mmfd. 500V	CD-6C-22P-500-20
50 mmfd. 500V	CD-3C-50P-500-10
75 mmfd. 500V	CD-3C-75P-500-10
100 mmfd. 500V	CD-3C-100P-500-10
150 mmfd. 500V	CD-3C-150P-500-10
200 mmfd. 500V	CD-3C-200-500-5
200 mmfd. 500V	CD-3C-200P-500-10
250 mmfd. 500V	CD-3C-250P-500-10
330 mmfd. 500V	CD-3C-330P-500-10
500 mmfd. 500V	CD-3C-500P-500-10
750 mmfd. 500V	CD-3C-750P-500-10
CAPACITORS MYLAR	
.001 mfd. 400V	CD-4M-001-400-10
.001 mfd. 600V	CD-4M-001-600-10
.0015 mfd. 400V	CD-4M-0015-400-10
.0022 mfd. 200V	CD-4M-0022-200-10
.0022 mfd. 400V	CD-4M-0022-400-10
.0022 mfd. 600V	CD-4M-0022-600-10
.0033 mfd. 400V	CD-4M-0033-400-10
.0047 mfd. 400V	CD-4M-0047-400-10
.01 mfd. 200V	CD-4M-01-200-10
.01 mfd. 400V	CD-4M-01-400-10
.01 mfd. 600V	CD-4M-01-600-10
.01 mfd. 600V	CD-4M-01-600-20
.015 mfd. 400V	CD-4M-015-400-10
.02 mfd. 100V	CD-4M-02-100-10
.02 mfd. 200V	CD-4M-02-200-10
.02 mfd. 400V	CD-4M-02-400-10
.022 mfd. 200V	CD-4M-022-200-10
.022 mfd. 400V	CD-4M-022-400-10
.022 mfd. 600V	CD-4M-022-600-10
.033 mfd. 200V	CD-4M-033-200-10
.039 mfd. 100V	CD-4M-039-100-10
.047 mfd. 50V	CD-4M-047-50-20
.047 mfd. 200V	CD-4M-047-200-10
.047 mfd. 400V	CD-4M-047-400-10
.047 mfd. 600V	CD-4M-047-600-10
.1 mfd. 200V	CD-4M-A1-200-10
.1 mfd. 400V	CD-4M-A1-400-10
.1 mfd. 600V	CD-4M-A1-600-10
.15 mfd. 200V	CD-4M-A15-200-10
.22 mfd. 50V	CD-4M-A22-50-20
.22 mfd. 100V	CD-13M-A22-100-10
.22 mfd. 200V	CD-4M-A22-200-10
.22 mfd. 400V	CD-4M-A22-400-10
.47 mfd. 100V	CD-4M-A47--100-10

DESCRIPTION	PART NUMBER
CAPACITORS ELECTROLYTIC	
1 mfd. 25V	CD-9E-125-20
1 mfd. 6V	CD-7E-1-6
2 mfd. 15V	CD-9E-2-15-20
2 mfd. 25V	CD-7E-2-25
5 mfd. 6V	CD-7E-5-6
5 mfd. 25V	CD-5E-5-25
5 mfd. 25V	CD-7E-5-25
5 mfd. 25V	CD-9E-5-25
10 mfd. 15V	CD-5E-10-15
10 mfd. 25V	CD-5E-10-25
10 mfd. 15V	CD-7E-10-25
10 mfd. 25V	CD-7E-10-15
10 mfd. 25V	CD-12E-10-25
10 mfd. 35V	CD-11E-10-35-20
10 mfd. 70V	CD-7E-10-70
10 mfd. 75V	CD-12M-10-75
16 mfd. 50V	CD-11E-16-50
20 mfd. 6V	CD-7E-20-6
10 mfd. 300V	CD-12E-10-300
20 mfd. 25V	CD-7E-20-25
20 mfd. 25V	CD-9E-20-25
20 mfd. 300V	CD-12E-20-300
20 mfd. 600V	CD-12E-20-600
25 mfd. 6V	CD-9E-25-6
25 mfd. 15V	CD-5E-15
25 mfd. 35V	CD-9E-25-35
30 mfd. 50V	CD-11E-30-50
25 mfd. 25V	CD-9E-25-25
40 mfd. 500V	CD-12E-40-500
50 mfd. 3V	CD-5E-50-3
50 mfd. 3V	CD-7E-50-3
50 mfd. 6V	CD-7E-50-6
50 mfd. 50V	CD-5E-50-50
50 mfd. 25V	CD-9E-50-25
50 mfd. 50V	CD-7E-50-50
50 mfd. 50V	CD-9E-50-50
50 mfd. 75V	CD-12E-50-75
100 mfd. 25V	CD-5E-100-25
100 mfd. 25V	CD-7E-100-25
100 mfd. 6V	CD-7E-100-6
100 mfd. 50V	CD-12E-100-50
200 mfd. 6V	CD-7E-200-6
200 mfd. 6V	CD-9E-200-6
200 mfd. 25V	CD-5E-200-25
200 mfd. 35V	CD-7E-200-35
500 mfd. 50V	CD-9E-500-50
1000 mfd. 30V	CD-7E-1000-30
1000 mfd. 30V	CD-9E-1000-30

DESCRIPTION	PART NUMBER
CAPACITORS ELECTROLYTIC (CONTINUED)	
1000 mfd. 35V	CD-7E-1000-35
1000 mfd. 50V	CD-9E-1000-50
2000 mfd. 6V	CD-7E-2000-6
2000 mfd. 35V	CD-7E-2000-35
2000 mfd. 6V	CD-5E-2000-6
CAPACITOR-FILTER	
500-500 mfd. 75V	CD-F-1004
20-20 mfd. 325V	CD-F-1005
20-20 mfd. 650V	CD-F-1006
40-40 mfd. 500V	CD-F-1007
20-10-10 mfd. 450V	CD-F-1008
20-20-20 mfd. 300V	CD-F-1009
20-40 mfd. 500V	CD-F-1010
40-20-20 mfd. 350V	CD-F-1011
20-20-20 mfd. 475V	CD-F-1012
40-20-20 mfd. 350V	CD-F-1013
20-20 mfd. 500V	CD-F-1014
20-20-20 mfd. 350V	CD-F-1015
80 mfd. 350V	CD-F-1016
80 mfd. 350V Can Type	CD-F-1017
20-20 mfd. 500V	CD-F-1018
40-40 mfd. 500V	CD-F-1019
20-20 mfd. 450V	CD-F-6673
20-20 mfd. 450V	CD-F-8222
20-20 mfd. 500V	CD-F-8557
20-10-10 mfd. 450V	CD-F-10157
10-10 mfd. 450V	CD-F-10160
20-10 mfd. 450V	CD-F-10413
CONTROLS	
500 Ohm	CB-23991
500K Ohm	CBA-001-801
500K Ohm	CBA-811-1053
250K Ohm	CBA-811-1831
10 Meg Ohm	CBA-811-3700
250K Ohm	CBA-811-3701
2 Meg Ohm	CBA-811-3702
2 Meg Ohm	CBA-811-3702-1
50K Ohm	CBA-811-3703
250K Ohm	CBA-811-3704
1 Meg Ohm	CBA-811-3705
500K Ohm	CBA-811-3706
500K Ohm	CBA-811-3706-1
500K Ohm	CBA-811-3707
2 Meg Ohm	CBA-811-3708

DESCRIPTION	PART NUMBER
CONTROLS (CONTINUED)	
1 Meg Ohm	CBA-811-3709
1 Meg Ohm	CBA-811-3709-1
10 Meg Ohm	CBA-811-3710
1.5 Meg Ohm	CBA-811-3711
1.5 Meg Ohm	CBA-811-3711-1
25K Ohm	CBA-811-3712
25K Ohm	CBA-811-3712-1
2 Meg Ohm	CBA-811-3751
2 Meg Ohm	CBA-811-3751-1
500K Ohm	CBA-812-1334
2 Meg Ohm	CBA-813-222
500K Ohm	CBA-813-4000
1 Meg Ohm	CBA-813-4002
2 Meg Ohm	CBA-4005
50K Ohm	CBA-4006
500K Ohm	CBA-4007
250K Ohm	CBA-4008
50K Ohm	CBA-4013
10K Ohm	CBA-4014
10K Ohm	CBA-4015
1 Meg Ohm	CBA-4016
500K Ohm	CBA-4017
1 Meg Ohm	CBA-4018
50K Ohm	CBA-4019
2 Meg Ohm	CBA-4020
250K Ohm	CBA-4021
150K Ohm	CBA-4022
100 Ohm	CBA-4023
250K Ohm	CBA-4024
1 Meg Ohm	CBA-4025
500K Ohm	CBA-4026
20 Ohm	CBA-4027
2 Meg Ohm	CBA-4028
2 Meg Ohm	CBA-4029
10K Ohm	CBA-4030
10K Ohm	CBA-4031
10K Ohm	CBA-4032
10K Ohm	CBA-4033
150K Ohm	CBA-4034
50K Ohm	CBA-4035
20K Ohm	CBA-4036
50K Ohm	CBA-4037
5 Meg Ohm	CBA-4038
5K Ohm	CBA-4039
500K Ohm	CBA-5124
2 Meg-1.8 Meg Ohm	CBA-823-037
250K-500K Ohm	CBA-991-023
50K Ohm	CBA-1023-001

DESCRIPTION	PART NUMBER
DIODE	
1200 PIV, 300ma	D1-57
1200 PIV, 250ma	D1-58
50V-750ma	D1-67
600V-250ma	D1-718
100V-150ma	D1-91
36V-400ma	D1-402
15V-400ma	D1-403
800V-800ma	D1-404
200V-1 amp	D1-405
200V-1 amp	D1-4003
200 PIV-1 amp	D1-406
50 PIV-1 amp	D1-407
600 PIV-150ma	D1-408
1500 PIV	D1-409
IN4721	D1-410
FUSES	
20 amp, 32V	FU-307020
5 amp, 32V	FU-311005
1 amp,	FU-312001
2 amp,	FU-312002
3 amp,	FU-312003
1.5 amp,	FU-312015
½ amp,	FU-312500
1.5 amp Slo Blo	FU-313015
1 amp Slo Blo	FU-313001
2 amp Slo Blo	FU-313002
3 amp Slo Blo	FU-313003
3.2 amp Slo Blo	FU-313003-2
5 amp Slo Blo Pigtail	FU-342012
PHOTO CELL ASSEMBLY	
Light Dependent Resistor	LDR-500
Light Dependent Resistor	LDR-501
PILOT LIGHT ASSEMBLY	
Pilot Light Green	PL-20G
Pilot Light Red	PL-20R
Pilot Light Red Jewel	PL-20J
Pilot Light Red	PL-32A
Pilot Light Red	PL-32R
Pilot Light Red 6V	PL-34R
Pilot Light Red	PL-35R
Pilot Light Red	PL-36R

DESCRIPTION	PART NUMBER
PILOT LIGHT ASSEMBLY (CONTINUED)	
Pilot Light Red	PL-37R
Pilot Light Amber	PL-38A
Pilot Light	PL-39
Pilot light Red	PL-40
Pilot Light	PL-41
Pilot Light Red	PL-42
Pilot Light Amber	PL-43
Pilot Light Socket	PL-44
Pilot light Red Jewel	PL-45
Pilot light Red	PL-46
Pilot Light #47	PL-47
Pilot Light Amber	PL-48
Pilot Light 28V	PL-1829
Pilot Light Sockets	PL-B-0150
RESISTORS WIREWOUND	
10 Ohm 5W	RE-KB-1001
1K Ohm 5W	RE-KB-1021
10K Ohm 5W	RE-KB-1031
130 Ohm 5W	RE-KB-1315
1.5K Ohm 5W	RE-KB-1512
2.2K Ohm 5W	RE-KB-2221
250 Ohm 5W	RE-KB-2511
25K Ohm 5W	RE-KB-2531
4K Ohm 5W	RE-KB-4021
500 Ohm 5W	RE-KB-5011
5K Ohm 5W	RE-KB-5021
68 Ohm 5W	RE-KB-6801
125 Ohm 5W	RE-KB-1201
10K Ohm 7W	RE-LB-1031
200 Ohm 7W	RE-LB-2011
3K Ohm 7W	RE-LB-3021
3.5K Ohm 7W	RE-LB-3521
4K Ohm 7W	RE-LB-4021
7.5K Ohm 7W	RE-LB-752
150 Ohm 10W	RE-MB-1511
180 Ohm 10W	RE-MB-1811
200 Ohm 10W	RE-MB-2011
22 Ohm 10W	RE-MB-2205
2.5K Ohm 10W	RE-MB-2521
25K Ohm 10W	RE-MB-2531
5K Ohm 10W	RE-MB-5021
5K Ohm 15W	RE-NB-4025

DESCRIPTION	PART NUMBER
RELAY	
KA-1472	RL-1472
REVERB UNIT	
Reverb Unit Complete	RV-1
Reverb Unit Complete w/o Foot Switch	RV-2
Reverb Unit	RV-3
Reverb Unit	RV-4C
Reverb Unit with Cardboard	RV-4C-1
Reverb Unit Model 1V	RV-4F
Reverb Unit Model 5HA	RV-5HA
Reverb Unit	RV-6
Reverb Unit	RV-8
Reverb Unit	RV-9
Reverb Unit	RV-9F
Reverb Unit	RV-10
SPEAKERS	
D-110F 10" Lansing	S-110F
D-120F 12" Lansing	S-120F
D-123 12" Lansing	S-123F
D-130 15" Lansing	S-130
S-140 15" Lansing	S-140
S-0127 15" CTS used on EA-4T;Atlas1V;EA-72;EA-500; Titan 111;Mercury 11	S-0127
V-1285 Jensen Used on EA-12RVT	S-1285
V-1287 Jensen used on EA-12RVT	S-1287
V-1309 Jensen used on Maestro 1	S-1309
V-1310 8J-11 Jensen	S-1310
V- 1392 12" Jensen	S-1392
P86 Jensen	S-5013
AD-5277M Phillips used on GA-300;GA-400;GA-200	S-5277
S-5824-2 P10Q Jensen	S-5824-2
C-5920-2 P12R Jensen	S-5920-2
S-6065 15" Gifco used on GA-60;GA-100;EA-65	S-6065
C-6265-3 P12R Jensen	S-6263
C-6265-3 P12R Jensen	S-6265-3
C-6279 P12P Jensen	S-6279
C-6351 P15N Jensen	S-6351
C-6761 P8 Jensen	S-6761
C6764 P-15P Jensen	S-6764
C-6786 P10R Jensen	S-6786
C-7129-2C 15N used on GA-77RVT;EA-8P	S-7129
C8S8 Jensen Ceramic Magnet	S-7155
C-7259-3 C10Q Jensen used on GA79RVT	S-7259-3
C-7324 C12R Jensen used on GA19RVT;EA-7P;GA-30RVT; M-216	S-7324-2

DESCRIPTION PART NUMBER

SPEAKERS (CONTINUED)

C-7334-5 C15R Jensen used on GA-25RVT;EA-15RVT.....S-7334-5
C-7414 C12P Jensen used on GA-40T.....S-7414-4
C-7633-3 10" Jensen used on TITAN III;EA-500T.....S-7633-5
C-7646 10" Jensen used on MERCURY II;EA-4T.....S-7646-3
C-9363 ROLA.....S-9363
C-9364 ROLA.....S-9364
9762M PHILLIPS.....S-9762
57FCM123 ROLLA.....S-11088-1
10C1848 10"CTS used on GA-5;EA-50;EA-50T.....S-20001
120299 12"CTS used on GA-8T;EA-35T.....S20002
10C1077 10"CTS used on EA-15RVT;EA-32RVT.....S-20003
10C1073 10"CTS used on GA-30RVT;.....S-20004
10E14730 10"CTS used on GA-75;GA-77RT;GA-45;EA14RVT....S-20005
10F1043 10"CTS used on GA-79RVT;GSS-50;EA-550.....S-20005
SP-123 12" CTS.....S-20006
12C1073 12" CTS used on GA-8T;EA-35.....S-20007
10C4727 10" CTS used on GA-5;EA50;KAL I,II,III,IV.....S-20008
12E12730 12" CTS used on GA-19RVT;EA-28RVT;GA-30RVT....S-20009
15F35760 15" CTS used on GA-77RVT.....S-20010
C-7887 12" Jensen used on GA-95RVT;EA-300RVT.....S-20011
10E14730 10" CTS used on GSS-100.....S-20012
10E14730 10" CTS used on GSS-100.....S-20012-1
10F14730 10" CTS used on GSS-100;600RVT.....S-20012-2
10E1050 10" CTS used on GA-55RVT;EA-12RVT.....S-20014
E12E1058 12" CTS S-20015
PCN10 10" Jensen.....S-20016
C12KS-S-14317 Jensen used on MED;DUO MEDALIST.....S-20017
10-0371 10" CTS used on HAWK.....S-20018
12NS-14360 12" Jensen used on EA-301;EA-401.....S-20019
12-1470 12" CTS.....S-20020
OP-8 Horn OXFORD Type.....S-20021
ID-40 UNIVERSITY.....S-20022
ID-0860 10" Replaces S-20014 in 4/10.....S-20023

TRANSFORMERS

TF-1P Transformer GA-1P.....80-00001
TF-5-0 Transformer-output GA-5;M-201;M-1.....80-10001
TF-5P Transformer Power.....80-00002
TF-5AP Transformer Power used on GA-5;GA-4RE;GA-5T
EA-50;EA-50T;.....80-00003
TF-5APF Transformer Power, Foreign use.....80-00003-0
TF-5TP Transformer Power, used on GA-5T.....80-00004
TF-8AP Transformer Power.....80-00005
TF-8APF Transformer Power. Foreign use.....80-00005-0
TF-10P Transformer Power.....80-00006
Tf-18-01 Transformer Output.....80-10002
TF-18P Transformer Power, used on GA-18;Gb-100;.....80-00007
TF-18PF Transformer Power, Foreign use.....80-00007-0

DESCRIPTION		PART NUMBER
TRANSFORMERS (CONTINUED)		
TF-18P-40	Transformer Power, GA-18	80-00007-04
TF-20-P-1	Transformer Power, GA-20	80-00008
TF-21-0	Transformer Output	80-10003
TF-23-0	Transformer Output	80-10004
TF-23-P	Transformer Power, GA-23	80-00009
TF-23P-2	Transformer Power for Canada	80-00009-0
TF-30-1	Transformer Output, used on GA-30	80-10005
TF-40-0-2	Transformer Output, used on GA-40	80-10006
TF-45-0-2	Transformer Output, used on GA-45	80-10007
TF-55	Transfomer Output, used on GA-55RVT	80-10008
TF-60- P	Transformer Power used on GA-100;60; 40T; 65; EA-8P;EA-12RVT	80-00010
TF-60-PF	Transformer Power, Export	80-00010-0
TF-60-PF-1	Transformer Power, Export	80-00010-0
TF-61	Crossover Network	80-40001
TF-70-02	Transformer Output, used on GA-70	80-10009
TF-77-0	Transformer Output, used on GA-77	80-10010
TF-77-02	Transformer Output	80-10011
TF-77P	Transformer Power	80-00011
TF-77PF	Transformer Power, Export	80-00012-0
TF-79PF-1	Transformer Power	80-00013-0
TF-79P	Transformer Power	80-00014
TF-PF	Transformer Power, Export	80-00014-0
TF-85	Transformer Output used on GA-85	80-10012
TF-88C	Transformer Choke	80-30001
TF- 88-0	Transformer Output, used on GA-88	80-10013
TF-88-P	Transformer Power, used on GA-88	80-00015
TF-9-0-1	Transformer Output, used on GA-9	80-10014
TF-90C-1	Transformer Choke, used on GA-90	80-30002
TF-90-0	Transformer Output, used on GA-90	80-10015
TF-90-P-L	Transformer Power, used on GA-90	80-00016
TF-100 P	Transformer Power, used on GA-30;EA-15RVT	80-00017
TF-100 PFD	Transformer Power, Export	80-00017-0
TF-101 P	Transformer Power used on GA-3RV;	80-00018
TF-101 PF	Transformer power, Export	80-00018-0
TF-102 P	Transformer Power	80-00019
TF-103-P-1	Transformer Power	80-00020
TF-103-P-1	Transformer Power, Export	80-00020-0
TF-104-P-1	Transformer Power	80-00021
TF-104-PF	Transformer Power, Export	80-00021-0
TF-105-P-1	Transformer Power	80-00022
TF-105-PF	Transformer Power, Export	80-00022-0
TF-106-P	Transformer Kal III & IV	80-00023
TF-107-P	Transformer Medalist & Duo Medalist	80-00024
TF-108-P	Transformer Power, Bass 50	80-00025
TF-109-P	Transformer Power, Hawk	80-00026
TF-110-P	Transformer Power Med. 4/10	80-00028
TF-110-P1	Transformer Power. Med. 4/10	80-00027
TF-111-P	Transformer Power, EA-301 & EA-401	80-00029

DESCRIPTION		PART NUMBER
TRANSFORMERS (CONTINUED)		
TF-112P	Transformer Power, Medalist 2/15	80-00030
TF-135-P	Transformer Power, used on Titan,	80-00031
TF-113P	Transformer Falcon & Hawk	954-011407
TF-135-PF	Transformer Power, Export	80-00031-0
TF-114P	Transformer Power, GTR 600	954-010431
TF-115-P	Transformer Power, Super Medalist	954-011444
TF-135-PF1	Transformer Power, Export	80-00031-0
TF-202-P	Transformer Power, used on GA-3,	80-00033
TF-202-P-1	Transformer Power, used on M-202	80-00035
TF-300-0	Transformer Output, used on GA-300,200	80-10017
TF-366A-6B	Transformer Output	80-10019
TF-400-0	Transformer Output, used on GA-400,	80-10020
TF-300-01	Transformer Output, used on GA-77RVT-L Mercury, Titan, EA-4T	80-10018
TF-400-01	Transformer Output, used on GA-400	80-10021
TF-400-02	Transformer Output, used on GA-400	80-10022
TF-400 P	Transformer Power,used on GA-400	80-00036
TF-400-P-1	Transformer Power, used on GA-400	80-00037
TF-400-P-2	Transformer Power, used on GA-400	80-00038
TF-400-P-1F	Transformer Power, Export	80-00037-0
TF-472-0	Transformer Output, used on Atlas; EA-72	80-10023
TF-500-0	Transformer Output, Kal I & Kal II	80-10024
TF-500-01	Transformer Output for CSA	80-10024-01
TF-501-0	Transformer Output	80-10025
TF-502-0	Transformer Output	80-10026
TF-503-0	Transformer Output	80-10027
TF-504-0	Transformer Output	80-10028
TF-505-0	Transformer Output	80-10029
TF-506-0	Transformer Output, Duo Med	80-10030
TF-507-0	Transformer Output, Bass 50	80-10031
TF-508-0	Transformer Output	80-10032
TF-509-0	Transformer Output, Medalist 4/10	80-10033
TF-510-0	Transformer Output, Medalist 2/15	80-10034
TF-511-0	Transformer Output, Medalist	80-10035
TF-512-0	Transformer Output, Duo	80-00136
TF-513-0	Transformer Output	80-10037
TF-1000-D	Transformer Driver used on TR-1000T;TR-1000	80-20001
TF-1001-D	Transformer Driver used on EA-15RVT	80-20002
TF-1000-P	Transformer Power used on TR-1000T;TR-1000 RVT	80-00038
TF-1000PF	Transformer Power, Export	80-00038-0
TF-1000-R	Transformer Reverb used on TR-1000; TR-1000 RVT	80-20003
TF-1001-D	Transformer Driver	80-20004
TF-1002-C	Filter Choke	80-30003
TF-1003-C	Filter Choke,	80-30004
TF-1004-C	Filter Choke	80-30005

DESCRIPTION		PART NUMBER
TRANSFORMERS (CONTINUED)		
TF-10005-D	Transformer Driver, GTR-600	80-20005
TF-1006-D	Transformer Driver, GTR-600	80-20006
TF-1007-A	Audio Autoformer, GTR-600	80-10038
TF-1824-C	Inductors used on cross-over network, used on Titan,Mercury	80-4002
TF-3021-S	Filter Choke	80-30006
TF-3021-H	Filter Choke	80-30007
TF-6283	Choke	80-30008
TF-E-6400	Transformer Audio	80-20007
TF-E-6400	Transformer Audio,for CSA	80-20007-01
TF-6401	Transformer Reverb	955-003555
TF-E-6415	Transformer Power	80-20008
TF-E-6415-PF	Transformer Power, Export	80-00039-0
TF-6417	Transformer Output,used on EA-12RVT	80-10039
TF-6417-1	Transformer Output, GA-30;EA-15RVT, GA-25RVT	80-10040
TF-E-6446	Transformer Power, Export	80-00040-0
TF-E-6461	Transformer Power, CSA & Los Angeles	80-00041-0
TF-6846	Transformer Reverb	80-20009
TF-GAV-1P	Transformer Power	80-00042
TF-6402	Transformer Reverb	80-20010
TFA-90-C-1	Choke Assembly	
TFA-90-C-2	Choke Assembly	
TFS-150	Transformer Step Down 220/250 to 110/125 150 Watts	80-40003

SWITCHES

Switch-2-pole-4 position,plus AC on-off Rotary,used on GA-300RVT, GA-77RVT,EA-5RVT	SW-77
Switch off, standby,on, on	SW-78
Switch	SW-103
Switch	SW-120
Switch-G-126 slide switch	SW-126
Switch	SW-128
Switch	SW-129
Switch DPT 2 amp AC	SW-130
Switch	SW-131
Switch	SW-203
Switch,Push,Push, used on Tro-115	SW-575
Switch, SPST, rotary	SW-898
Switch, SPST-SPDT, 3 Pcs, rotary	SW-899
Switch	SW-903
Switch, Black Button	SW-913
Switch, used on CA-345	SW-1007
Switch, lever	SW-1073
Switch, lever	SW-1078
Switch, lever used on old style Les Paul	SW-1430

DESCRIPTION — PART NUMBER

SWITCHES (CONTINUED)

Switch 2 pole 3 ppsition lever.....SW-1452
Switch.....SW-1454
Switch Toggle.....SW-1456
Switch.....SW-1824
Switch, Push.....SW-1885
Switch, level.....SW-2234
Switch, phase toggle.....SW-2711
Switch, slide DPST.....SW-4602
Switch lever.....SW-5124
Switch for console.....SW-14222
Switch SPDT with Black knobs.....SW-34-160
Switch SPDT.....SW-80515
Switch toggle.....SW-80994
Switch pushbutton.....SW-82403
Switch SPDT Push, Push.....SW-82422
Switch toggle.....SW-82630
Switch.....SW-102904
Switch.....SW-70-03620
Switch.....SW-70-03799
Switch.....SW-70-03805
Switch special phasing.....SW-19827
Switch 3 pole 4 position.....SW-180752

TUBES

TU-6V6 GT	Tube	85-40014
TU-6X4	Tube	85-20004
TU-12AU7A	Tube	85-30006
TU-12AU7-J	Tube	85-30006-06
TU-12AY7	Tube	85-30008
TU-12AX7-A	Tube	85-30007
TU-5881	Tube	85-40015
TU-5879	Tube	85-40016
TU-6550	Tube	85-40017
TU-7199	Tube	85-40018
TU-7591	Tube	85-40019
TU-GZ-34	Tube	85-20005

TREMELO ASSEMBLIES

Tremelo Pedal Switch Block.....TRO-1
Tremelo Pedal Bracket.....TRO-2
Tremelo Pedal Bracket, CAD. Plated.....TRO-2C
Tremelo Switch Block Assembly with SPT-1 cord.....TRO-3
Tremelo Switch Block Assembly with 15ft. Shielded CableTRO-4
Tremelo Switch Block Assembly with 15ft. CRD-8735.....TRO-5
Rubber pads for Tremelo Switch Blocks.....TRO-7

DESCRIPTION PART NUMBER

TREMELO ASSEMBLIES (CONTINUED)

Dual Pedal for Tremelo Switch Blocks.....TRO-11
Dual Pedal Switch Block.....TRO-11-S
Double Tremelo Pedal Bracket.....TRO-12
Double Tremelo Pedal Bracket Cad. Plated.....TRO-12-C
Double Tremelo Pedal Bracket Sprayed.....TRO-12-S
Tremelo Switch Block assembly with 15ft. cable CRD-8734
(GA-78T- GA-79T).....TRO-14
Rubber pads for double Tremelo Switch Blocks.....TRO-17
Rubber Switch Block, one hole.....TRO-101
Rubber Tremelo Switch Block Assembly with CRD-SPT-1....TRO-103
Rubber Tremelo Switch Block Assembly with 15ft. shield
cable CRD-MIKE-15.....TRO-104
Rubber Tremelo Switch Block Assembly with 15ft. cable
CRD-8735.....TRO-105
Hardboard bottom for TRO-101 Switch Block.....TRO-107-1
Hardboard bottom for TRO-101 with HW-9521 snap.....TRO-108
Rubber Switch Block, 2 holes.....TRO-111
Rubber switch block,hot stamped white.....TRO-111-S
Rubber tremelo switch block assembly with 15ft.CRD.-
8734 cable used on GA-78T,GA-79RVT.....TRO-114
Same as TRO-114, with one CN-91MPM 3L plug used on
GA-300RVT.....TRO-115
Foot pedal assembly switch used on CL-20.....TRO-117
Double foot pedal assembly 15ft. long with PLG-297 plugTRO-118
Double foot pedal assembly 15ft. long with plug. Used
on GA-95RVT.....TRO-119
Double foot pedal assembly 15ft. long with plug. Used
on GA-20RVT.....TRO-120
Single foot pedal assembly 10ft. long for GA-4RE.....TRO-121
Single foot pedal assembly 15ft. long for GA-5T,EA-50T
with plug-black.....TRO-122
GSS-50 foot pedal switches grey cable CRD-8763.....TRO-123
Foot pedal assembly Duo Med.....TRO-124
Foot pedal assembly Hawk.....TRO-125
Foot pedal assembly EA-301, EA-401